SPACECRAFT SIGNAL SOURCES PORTABLE TEST SYSTEM[1]

ALBERT KIRK, PAUL KUHNLE, RICHARD SYDNOR and WILLIAM DIENER
California Institute of Technology
Jet Propulsion Laboratory
Pasadena, California 91109

Abstract

There is a frequent need to measure the frequency stability and phase noise levels of very high performance signal sources that are required for certain spacecraft missions. These measurements need to be done at different locations as the spacecraft subsystems progress through the various stages of development, assembly, test and integration.

Allan Deviation and Phase Noise of high performance sources are generally measured by comparing the unit under test to a reference standard. Five basic requirements are associated with making these kind of measurements:

1. The reference standard performance needs to be equal or better than the unit under test.
2. The measurement system needs to accomodate odd, non-standard measurement frequencies that can range from 4MHz to 35GHz.
3. Warm-up frequency drift and aging can corrupt a measurement and must be dealt with.
4. Test equipment generated noise must be understood and prevented from limiting the measurements.
5. Test equipment noise performance must be verifiable in the field as needed.

This paper describes a portable measurement system that has been built by JPL and used in the field. The methods of addressing the above requirements are outlined and some measurement noise floor values are given.

This test set has recently been used to measure state of the art crystal oscillator frequency standards on the TOPEX and MARS OBSERVER spacecraft during several stages of acceptance tests.

1 This work represents one phase of research carried out at the Jet Propulsion Laboratory, California Institute of Technology, under a contract sponsored by the National Aeronautics and Space Administration.

SPACECRAFT SIGNAL SOURCES PORTABLE TEST SYSTEM

Albert Kirk
Paul Kuhnle
Richard Sydnor
William Dieser

CALIFORNA INSTITUTE OF TECHNOLOGY
JET PROPULSION LABORATORY
PASADENA, CALIFORNIA 91109

OBJECTIVES

A. MEASURE THE 4, 5 AND 19 MHz OUTPUT SIGNALS OF THE TOPEX/POSEIDON SPACECRAFT CRYSTAL OSCILLATOR REFERENCE SOURCE

B. MEASURE THE 8.42 GHz TRANSMITTER OUTPUT ON THE MARS OBSERVER SPACECRAFT. THIS SIGNAL IS SYNTHESIZED FROM A HIGH PERFORMANCE 4 MHz CRYSTAL OSCILLATOR

REQUIRED MEASUREMENTS

1. ALLAN DEVIATION, τ = 1s TO τ = 10000s
2. PHASE NOISE, AT OFFSET FREQUENCIES FROM CARRIER. 1 Hz TO 10 KHz
3. DETECTION OF SPURIOUS, UNDESIRABLE PHASE MODULATION
4. DETECTION OF CROSSTALK
5. DETECTION OF ENTRAINMENT
6. AGING
7. WARM-UP CHARACTERISTICS
8. ABSOLUTE FREQUENCY

SPECIFICATIONS

ALLAN DEVIATION

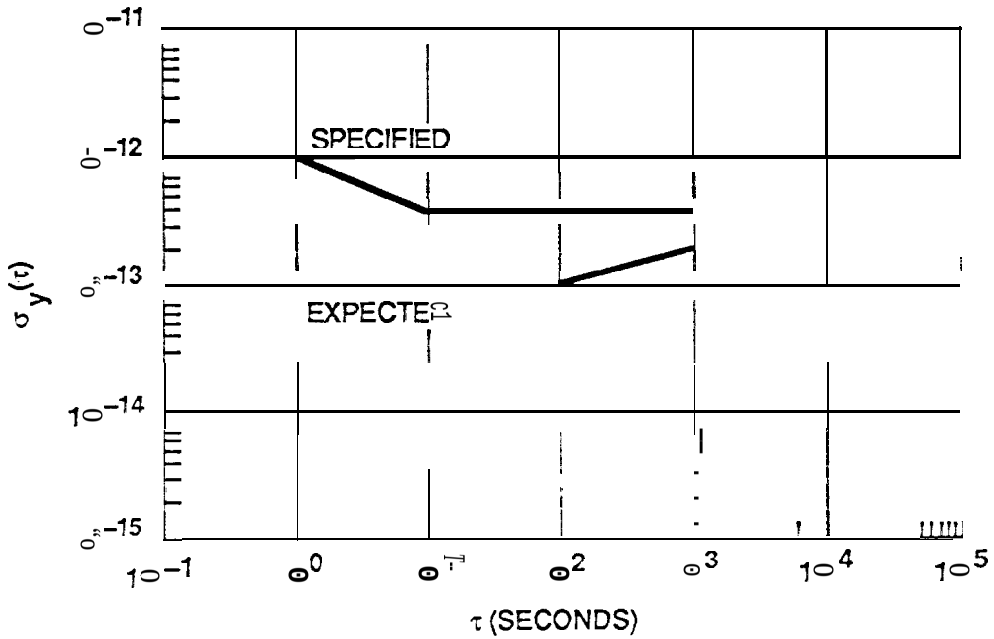

PHASE NOISE, NORMALIZED TO 5 MHz

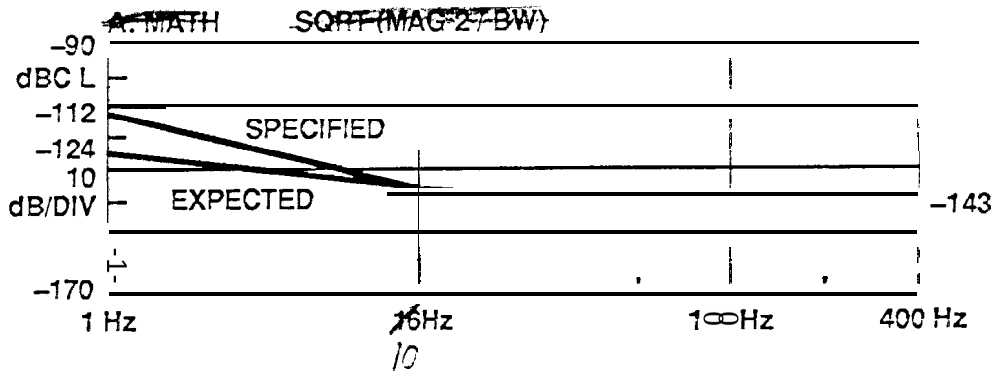

AVAILABLE REFERENCES

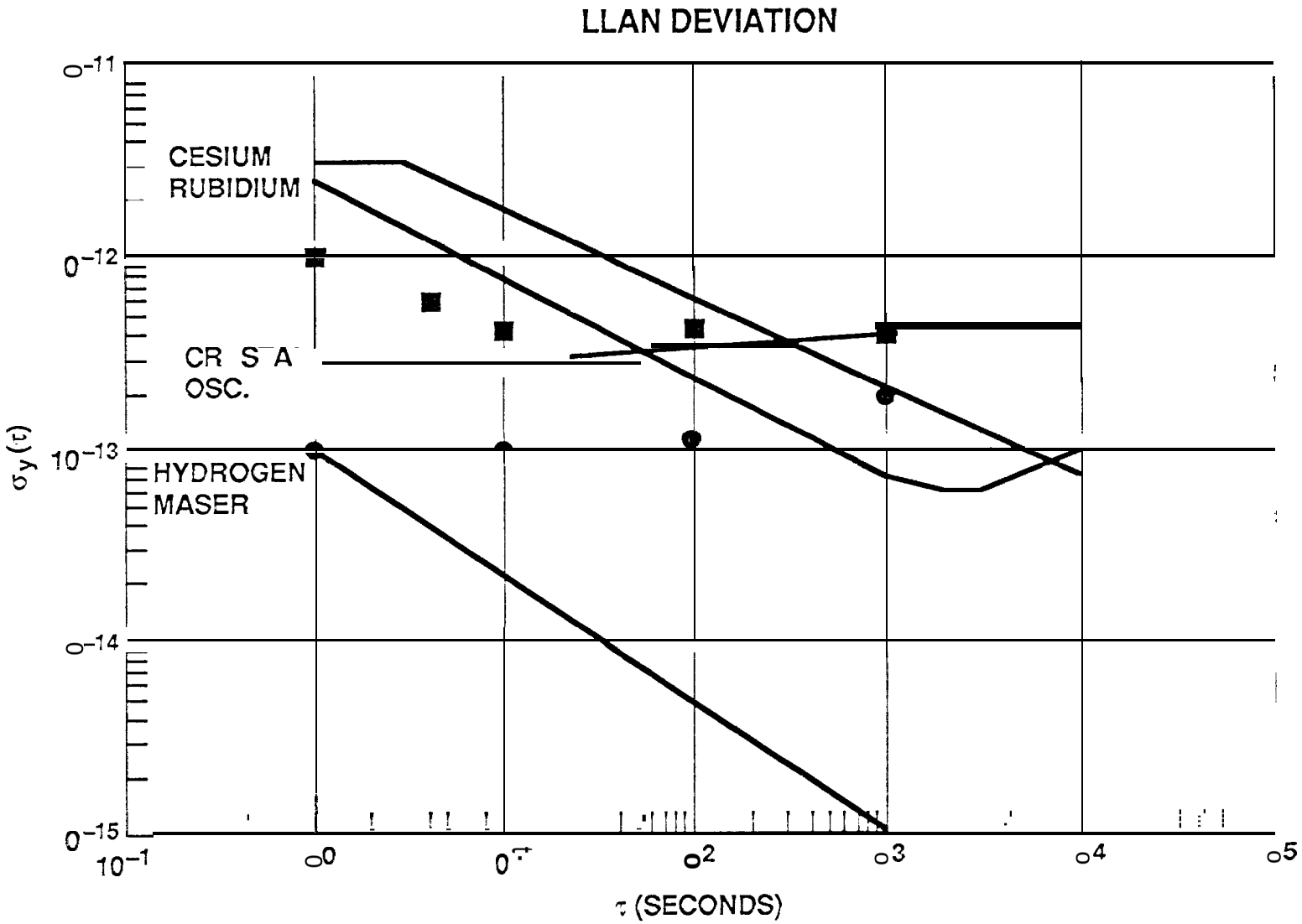

BASIC TEST CONFIGURATION

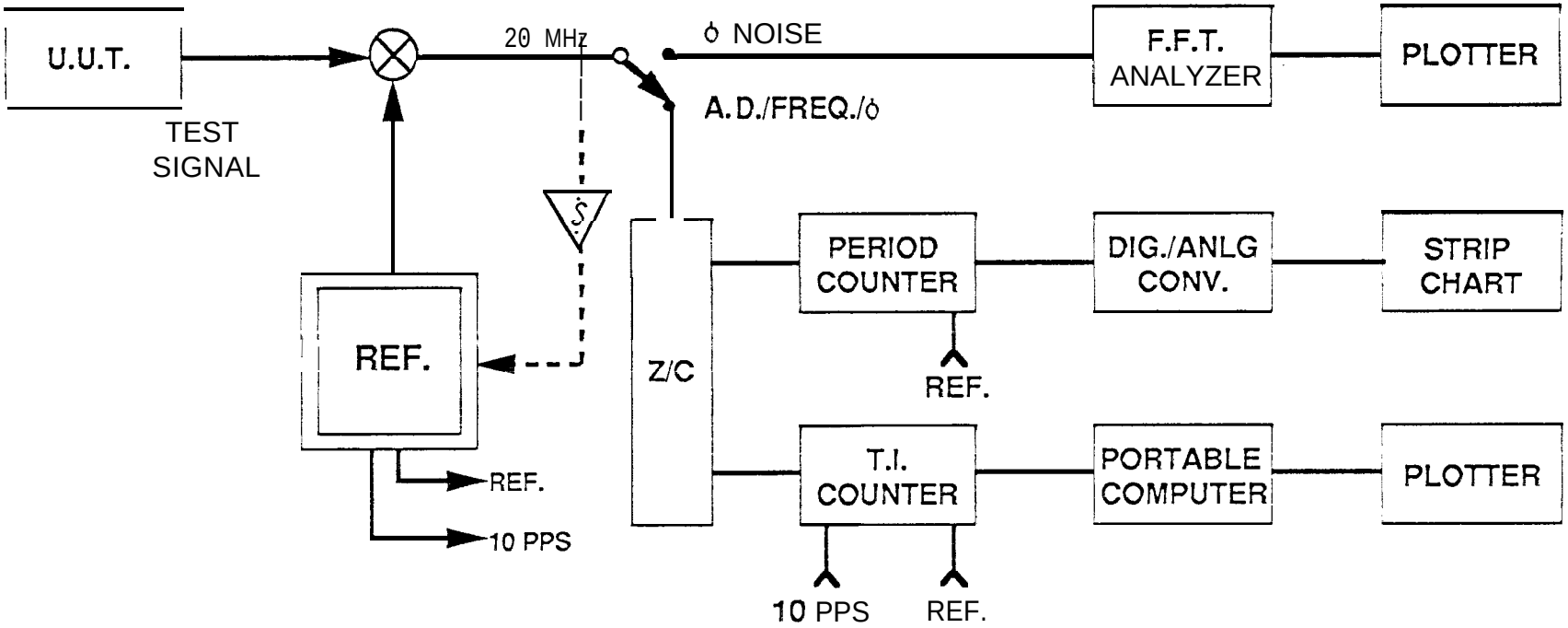

WHAT ARE THE PROBLEMS?

1. U.U.T. MUST NOT DRIFT TOO MUCH
2. MIXER NOISE MUST NOT LIMIT MEASUREMENT
3. REF. SOURCE MUST BE EQUAL OR BETTER THAN U.U.T.
4. SYSTEM MUST ACCOMMODATE OUTPUT FREQ. OF U.U.T.
5. MEASUREMENT SYSTEM PERFORMANCE MUST BE VERIFIABLE

LOW FREQUENCY TEST SYSTEM CONFIGURATION

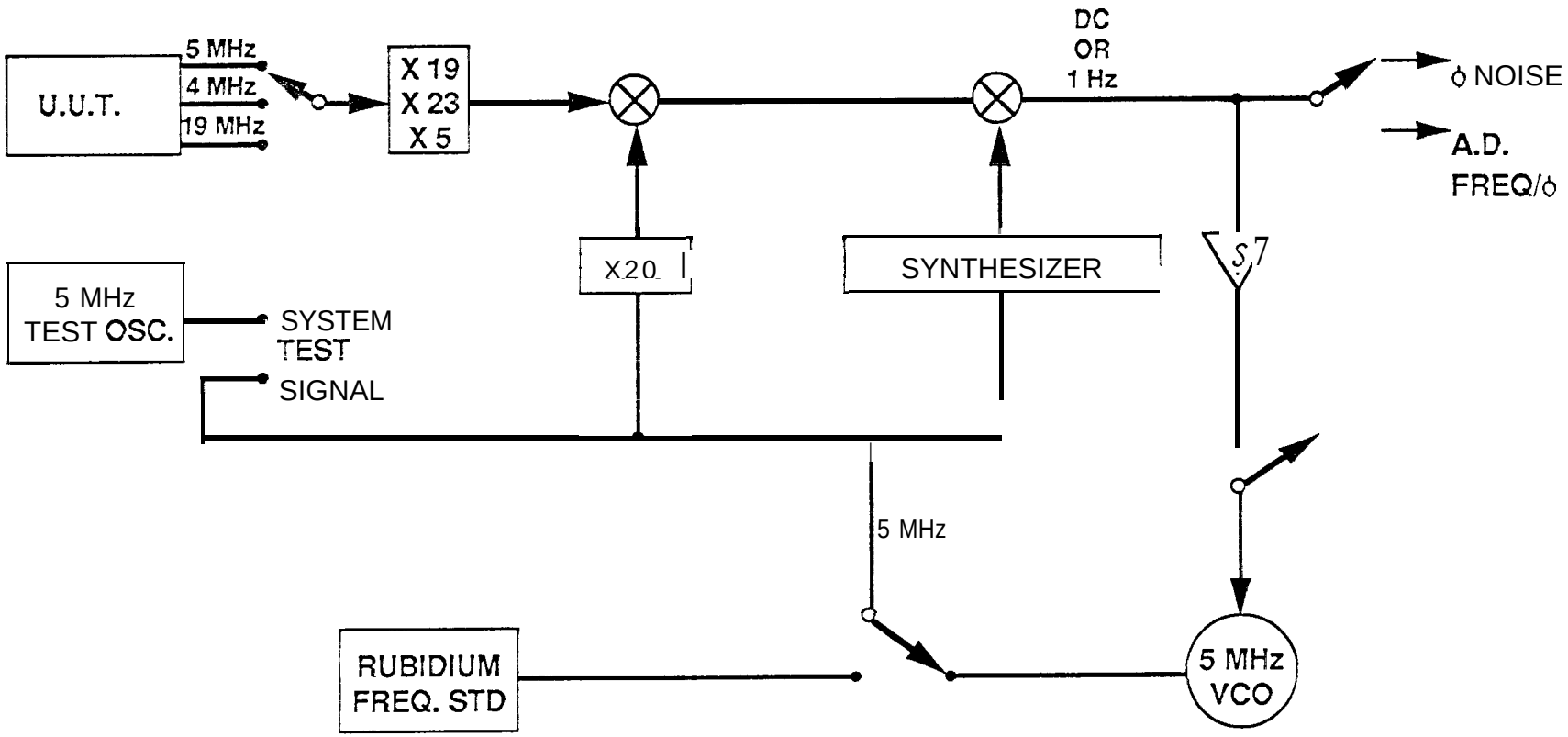

HIGH FREQUENCY TEST SYSTEM CONFIGURATION

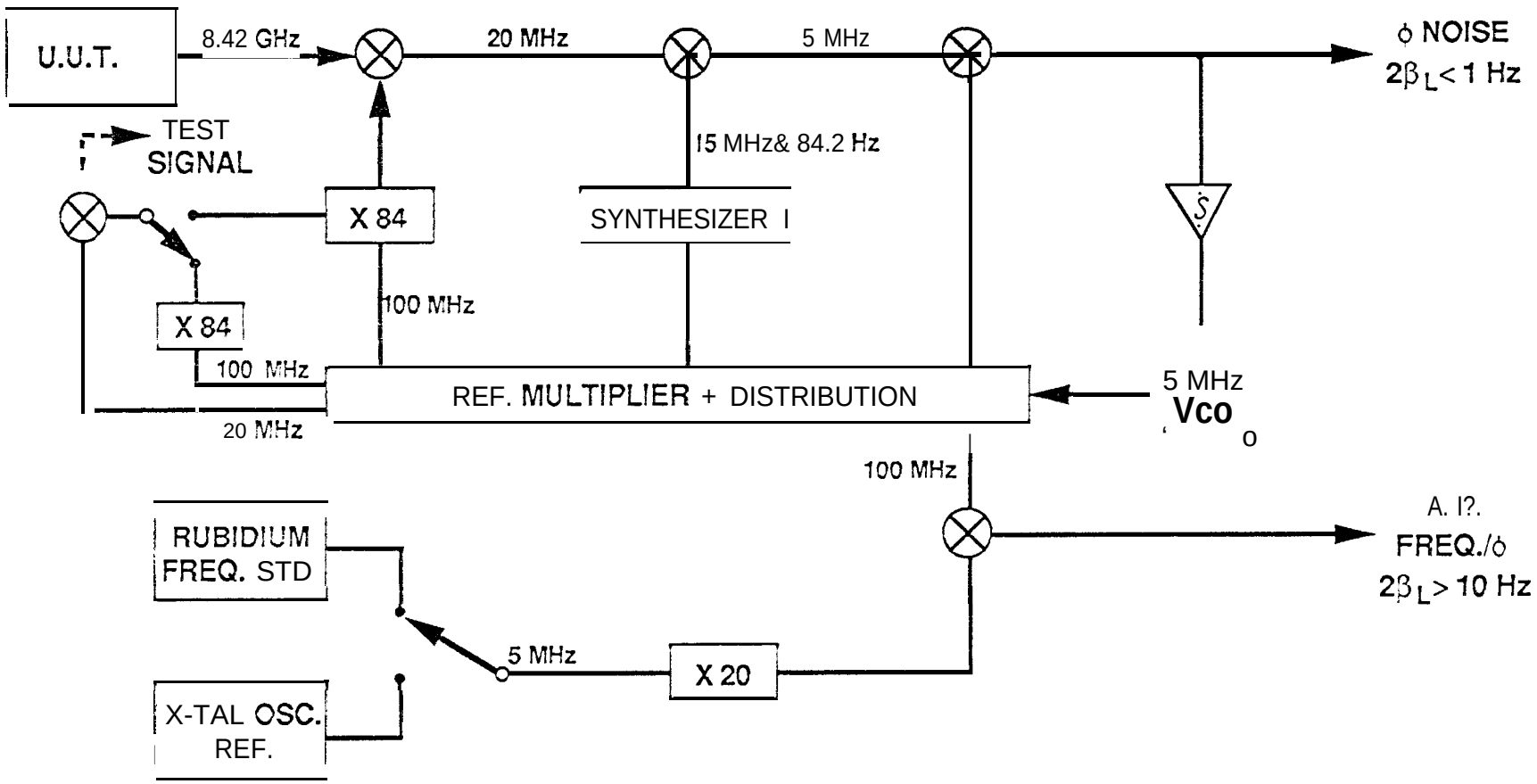

UNIVERSAL **LOW** NOISE FREQUENCY MULTIPLIER

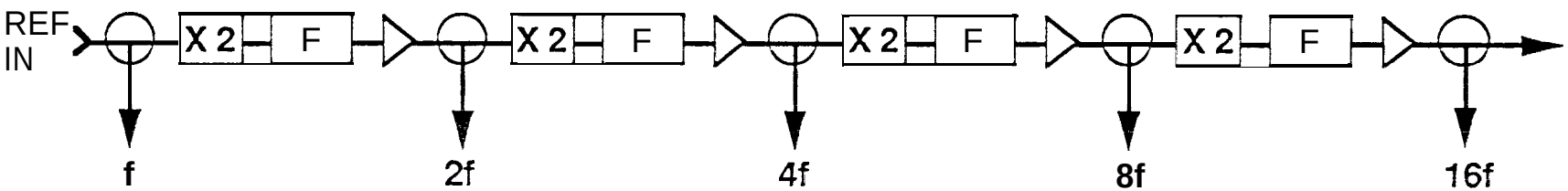

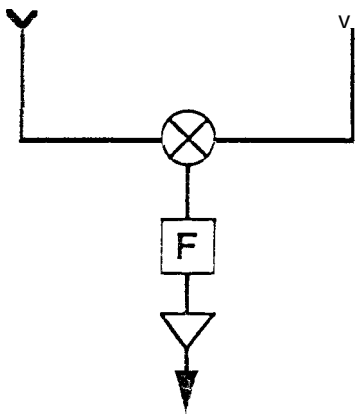

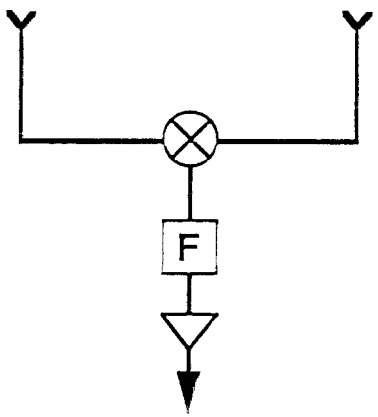

X 19 = 16f + (f + 2f)
X 23 = 16f + (8f – f)
X 5 = 4f + f

TEST SYSTEM NOISE FLOOR AT 8.42 GHz

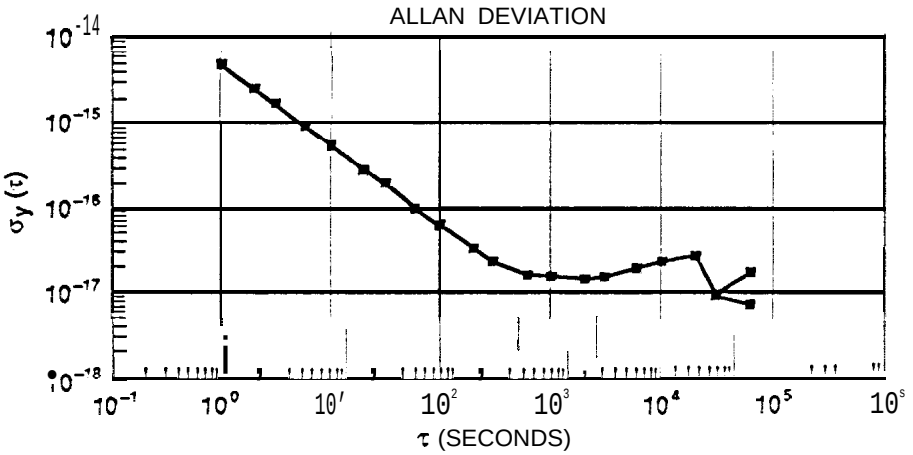

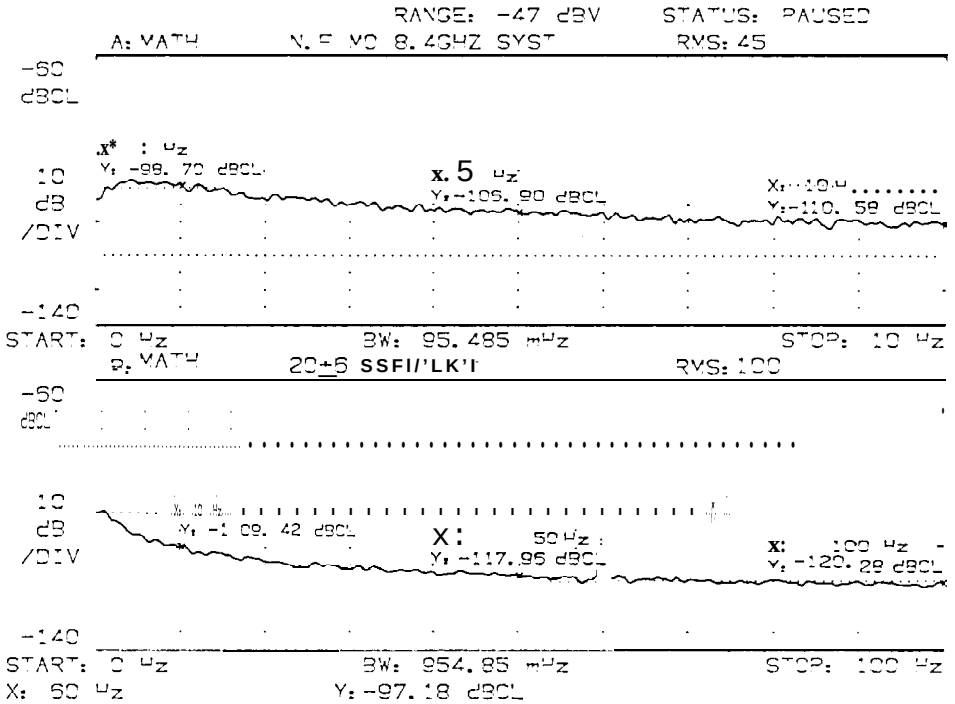
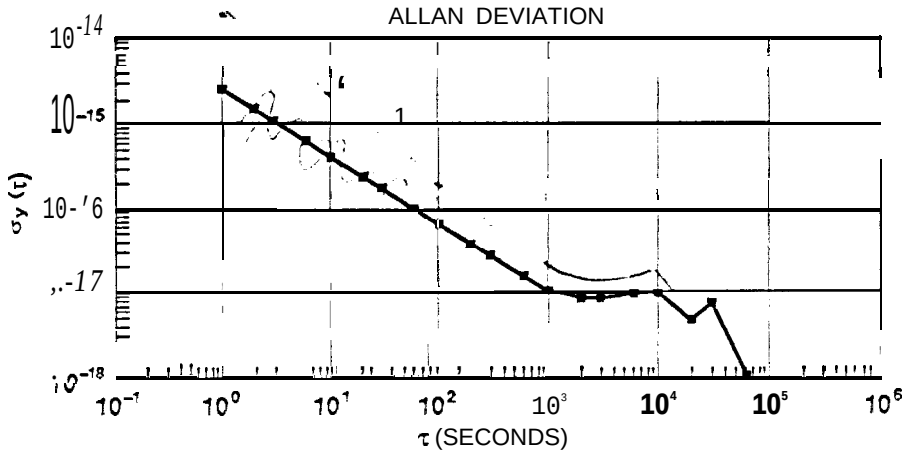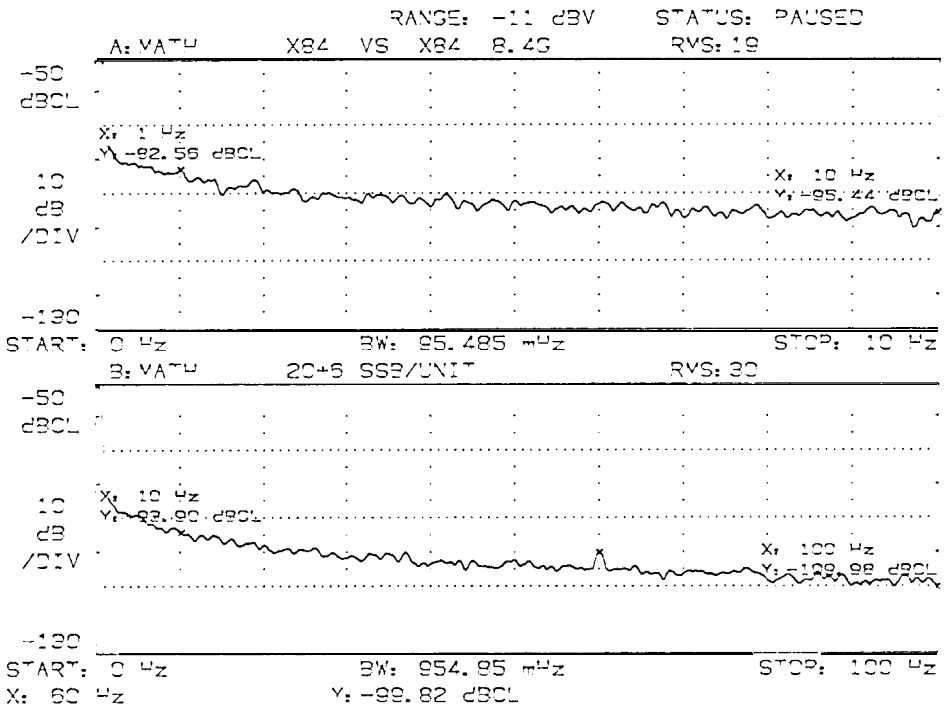
X 84 MULTIPLIER NOISE AT 8.4 GHz