Submitted to IEEE Regional Conf. on Aerospace Control Systems, Thousand Oaks, CA, May 25-27, 1993.

μ-Synthesis Robust Control: What's wrong and how to fix it?

Michael G. Safonov*
Jason Ly†
Richard Y. Chiang‡

January 6, 1993

Abstract

The theory of p-synthesis introduced in [1, 2] provides, in principle, a broadly applicable theory for the optimal synthesis of multiloop feedback control laws that robustly meet performance and disturbance attenuation specifications despite unknown-but-bounded nonlinearities and parameter variations. commercial MATLAB-based software packages implementing a crude approximation to the theory are available [3, 4], but these computer packages address the complex p-synthesis problem via a somewhat flawed inplernentation of the original D-K iteration algorithm which involves the repetition of the following three operations on a suitably augmented closed-loop system transfer function:

1. Optimize a diagonal scaling frequency response matrix $D(j\omega)$ for a fixed control law K(s).
2. Perform an *ad hoc* state-space curve-fit to $D(j\omega)$.
3. Use H^∞ control to compute a control law K(s) with the diagonal scaling D(s) fixed.

The curve-fitting of Step 2 has, until now, been a major obstacle to the realization of the original vision of a completely automated p-synthesis procedure for robust control design. 'l'his talk describes new theoretical results and how they enable us to bypass the difficult and awkward curve-fitting of Step 2. The result is the first reliable computational algorithm for μ-synthesis controller design. ,

I Introduction

The K_m-synthesis theory concerns the synthesis of multi variable feedback control laws with a robust tolerance of uncertain variations in the gains and or phases in several, possibly multi variable, feedback loops. The term "K_m" refers to the multivariable stability margin [5, 6]; it is the reciprocal of the structured singular value μ [7], i.e., $\mu = 1/K_m$. 'J'he term "synthesis" refers to the synthesis (i.e., automatic design) of feedback control laws. '1'bus, K_m-synthesis and p-synthesis concern the automatic design of control laws with good multivariable stability margins.

The concept of multivariable stability margin has a history that goes back nearly thirty years. 'J'bough not focusing on the issues of uncertainty or stability margins, the 1960's input-output stability results of Sandberg [8] and Zames [9] based on conic-sectors, posit ivity and loop-gain

*Electrical Engineering—Systems, University of Southern California, Los Angeles, CA 90089-2563; (213) 740-4455; safonov@bode.use.edu

† Electrical Engineering- Systems, University of Southern California, Los Angeles, CA 90089-2563

‡ Jet Propulsion Laboratory, California Institute of Technology, Pasadena, CA 91109

contain the key concepts and formed the basis for most modern approaches to multivariable stability margin analysis. Without specific reference to the term 'singular value," the small-gain nonlinear stability results of [8, 9] both incorporated singular value conditions of the sort now popularly used to evaluate multivariable stability margins for linear time-invariant systems. Taking a different tack, Rosenbrock made use of diagonal dominance conditions to evaluate the stability robustness of multiloop feedback control systems against simultaneous variations in the gains in several feedback loops (see [1 O] and the references therein). The concept of multivariable stability margin was introduced in the modern control context in [1 1, 5]. The connection between the nonlinear-stability results of the Sand berg/ Zames type involving conic-sectors and singular values was made by Safonov and Athans [1 1, 12, 13]. The singular value approach has been further developed by a number of authors including, for example, [14, 6, 15, 16, 17].

A quantitative measure of multivariable stability margin, called the *excess stability margin* K_m, was introduced by Safonov and Athans [6]. Safonov [18, 19] developed a technique based on Perron eigenvalues/eigenvectors to optimize diagonal scalings so as to produce less conservative estimates of K_m than would be possible with singular values alone. The terminology *structural* singular *value* μ *was* introduced by Doyle [7]; μ is the reciprocal of Safonov and Athans' multivariable stability margin K_m. Doyle [7] showed that optimal diagonally scaled singular values produce a nonconservative estimate of μ for systems with three complex uncertainty blocks. Algorithms for optimal diagonal scaling and generalizations thereof were further studied by [20, 21]. Techniques for further reducing conservativeness of μ computations for systems with one or more uncertain real gains were introduced by Doyle [22] and further developed by Fan et al [23]. Safonov and Lee [24] developed a multiplier formulation of these results and associated computational algorithms based on the preliminary work of Chiang and Safonov [25].

'l'he concept of K_m-synthesis, or p-synthesis, was introduced in the papers of Safonov [1] and Doyle [2]. A hybrid of the H^∞ control theory (e.g., [26, 27]) and the diagonal scaling techniques for multi variable stability margin analysis, K_m -synthesis is potentially broadly applicable theory for the synthesis of multiloop feedback control systems that perform robustly despite H^∞-norm bounded uncertain gains in one or more feedback loops. ~'bough the original vision has yet to be fully realized, commercial computer programs implementing a crude approximation to the concept were introduced recently [3, 4]. These computer programs address the complex K~~-synthesis problem via the so-called $D-F$ iteration in which one iteratively optimizes first a diagonal scaling frequency response matrix $D(j\omega)$ for a fixed control law $F(s)$ and then optimizes the control law F(s) with the diagonal scaling $D(s)$ fixed. Each of the optimization are known to be convex individually, though the combined problem is unfortunately not, g'bus, even under ideal circumstances the $D-F$ iteration approach to Km-synthesis cannot be guaranteed to be globally convergent. Nevertheless, each iteration tends to improve a bound on performance and robustness so that it can be an effective approach to robust control system design.

However, there is one major problem with the approaches to Km-synthesis in [1, 2, 3, 4]. They all require curve fitting approximations as an intermediate step after each $D(j\omega)$ optimization, in order to obtain a rational, state-space realizable diagonal scaling matrix $D(s)$ whose frequency response approximates that of the $D(j\omega)$ computed in the D(s) portion of the $D-$ F iteration. It is this curve fitting phase that is the principal obstacle to the realization of the original vision of a completely automated K_m-synthesis procedure for robust control design.

In this paper we show how to bypass the difficult and awkward curve fitting phase of K_m-synthesis. We develop theory and associated conceptional algorithms, ready for computer imple mentation, that directly compute optimal fixed order diagonal scalings $D(s)$ so that curve fitting is unnecessary. Wc show that in fact it suffices to consider polynomial diagonal scaling matrices D(s)

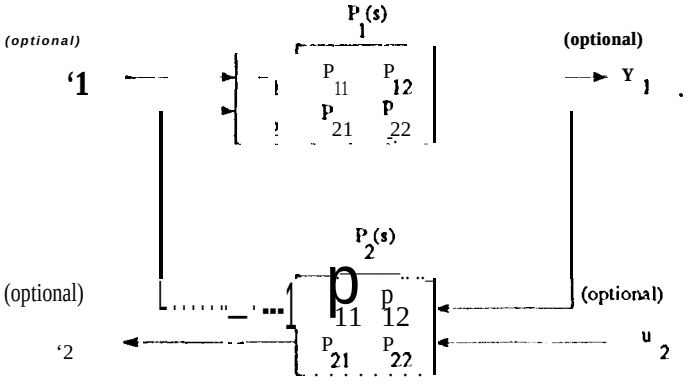

Figure 1: Linear fractional transformation

of a fixed degree and that the resultant optimization is essentially finite dimensional and convex.

We adopt the more general, less conservative multiplier formulation of the K_m-synthesis problem introduced by us in [25]. in this formulation the usual diagonal scalings are replaced with complex diagonal multipliers acting on a positive-real, bilinearly-transformed system. Our multiplier formulation includes the diagonal scaling approach as a special case, but it also has the advantage that it is capable of producing less conservative K“,-synthesis control law designs for the case in which some or all of the uncertain gains are known to be real. As noted in [24], the multiplier stability robustness conditions for systems with mixed real/complex uncertainty offer a new perspective on, but are mathematically equivalent to, the conditions of [22, 23]. The advantages of the new multiplier perspective in paving the w'ay for a reliable, fully-automated K_m-synthesis procedure become clear in the present paper.

The paper is organized as follows. In section 111 we describe our multiplier formulation of the K_m-synthesis problem. In section IV we show that, in seeking fixed order rational diagonal multipliers, we can without 1oss of generality restrict our attention to fixed degree diagonal polynomial multipliers. In section V we present our main theoretical results which characterize fixed order multiplier optimization as the equivalent of an m-form numerical range optimization similar to that considered by [21] --- a problem which is smooth, convex and readily solved via iterative numerical algorithms. One such algorithm is is given in Section V]. Conclusions are in Section VII.

II Notation

We employ the notation in Table I. Additionally, we use the notation $\mathrm{lftf}(P_1, P_2)$ to refer to the linear fractional transformation resulting from the interconnection of two systems as shown in Figure 1. Note that in general, both systems P_1 and P_2 are two port systems, but that the linear fractional transformation is still defined if either system is a one port, i.e., if either $dim(u_1) = dim(y_1) = 0$ or $dim(u_2) = dim(y_2) = 0$. We refer to transfer function matrices in sector[0, 00] as *positive real.*

Table I: Notation.

$:=$	denotes (is defined as)
$\mathcal{R}$	the set of real numbers
C	the set of complex numbers
$\mathcal{Z}$	the Set of integers
$2+$	the set of nonnegative integers
$co(x)$	the closed convex hull of a set $\mathcal{X}$
$\mathrm{col}(x_1,\ldots,x_n)$	the column vector $[x_1^T, x_2^T, \ldots x_n^T]^T$.
$\mathrm{col}_{i=1,\ldots,n}(x_i)$	$col(x_1,\ldots,x_n)$
$\mathrm{diag}_{i=1,\ldots,n}(A_i)$	the block diagonal matrix $diag(A_1, A_2, \ldots An)$
$\bar{A}$	the complex conjugate of A
A^T	the transpose of A
A^*	$\bar{A}^T$, if A is a matrix
$A^*(s)$	$A^*(-\bar{s})$
$\deg(p(s))$	degree of the polynomial matrix $P(s)$
$\mathrm{herm}(A(s))$	$\frac{1}{2}(A + A^*)$
$\mathrm{asym}(A(s))$	$\frac{1}{2}(A - A^*)$
$\bar{\sigma}(A)$	The greatest singular value of the matrix A
L^2	$L^2(-\infty,\infty)$
$\|A(s)\|_{L^2}$	$= \sqrt{\int_{-\infty}^{\infty} A^*(j\omega)A(j\omega)d\omega}$
$\mathcal{S}$	the unit sphere in L^2; i.e., $\{x \in L^2 \mid \|x\|_{L^2} = 1\}$
H^∞	The set of stable transfer function matrices
$\|A(s)\|_\infty$	The H^∞ norm, $\sup_{j\omega} \sigma_{max}(A(j\omega))$
sector[-1, 1]	The set $\{G(s) \in H^\infty \mid \|G(s)\|_\infty \leq 1\}$
sector$[0,\infty]$	The set $\{G(s) \in H^\infty \mid \mathrm{herm}(G(jw) \geq 0\ \forall\omega \in \mathcal{R}\}$
$\mathrm{sectf}(A(s))$	$\mathrm{sectf}(A) = (I - A)(1 + A)^{-1}$

111 K_m -Synthesis using Multipliers

One of the drawbacks associated with the complex K_m or μ synthesis is that it treats each uncertainty as being bounded by a complex disc. This can lead to conservativeness if one or more of the uncertainties A_i is known to be real. In [25] we briefly introduced the idea of using generalized Popov multipliers to formulate a new procedure that can find a robust $\mathbf{H}^\infty$ controller that takes into account the real uncertainties of the system, In this section we describe our multiplier approach to mixed real/complex K“,-synthesis in greater detail.

A bilinear sector transform plays an essential role in our multiplier formulation of the p-synthesis procedure. It converts the regular H^∞ problem of placing the closed loop system inside sector [- 1, 1] to an equivalent problem of placing it inside sector[O, cm]; Popov multiplier techniques are applicable to the latter problem. Multipliers which preserve the sectoricity properties of the sector-transformed block diagonal uncertainty matrix A $=\mathrm{diag}(\Delta_1, \ldots \Delta_p)$ are then chosen so as to maximize the gamma for which the transformed closed-ioop system is in the sector$[0,\infty]$ meets the robust stability conditions of the positive relation stability criterion [9] which states that a sufficient condition for a negative feedback interconnection of two stable systems to be stable is that one of the systems be positive and the other to be strictly positive. A stable linear time-invariant system G(s) is positive

if it is positive real; it is strictly positive if for some $\epsilon > 0$, G(s) -- ϵI is positive real.

The bilinear sector transform is defined as follows

Definition 1 Given *a square transfer function matrix* $G(s)$, *the* bilinear sector transform *of* $G(s)$ *is defined 10 be*

$$\mathrm{sectf}(G(s)) = (I - G)(I + G)^{-1} \tag{1}$$

From the H^∞ control perspective, one kcy property of the sector transform is that is maps the sector[– 1, 1] onto sector[0, m].

Lemma 1 *Let* $T = \mathrm{sectf}(G)$. *Then* G $\in$ sector[– 1, 1] *if and only if* $T \in$ sector$[0, \infty]$

Proof: This is a well known fact (e.g., [28]). It may be easily proved as follows:

$$\begin{aligned} G \in \mathrm{sector}[-1,1] \quad &\Leftrightarrow \quad \|G\|_\infty \leq 1 \\ &\Leftrightarrow \quad I - G^*G \geq 0 \\ &\Leftrightarrow \quad \mathrm{herm}((I+G)^*(I-G) \geq 0 \\ &\Leftrightarrow \quad \mathrm{herm}((I-G)(I+G)^{-1} \geq 0 \\ &\Leftrightarrow \quad T \in \mathrm{sector}[0,\infty] \end{aligned} \tag{2}$$

[1

Note that the relation $T = \mathrm{sectf}(G)$ can be realized via a linear fractional transformation

$$T(s) = \mathrm{lftf}(\mathrm{SECTF},\ \mathrm{G(s)}) \tag{3}$$

where SECTF denotes the matrix

$$\mathrm{SECTF} := \begin{bmatrix} 1 & -2I \\ I & -I \end{bmatrix} \tag{4}$$

The sector transform sectf is equal to its own inverse; that is,

$$G = \mathrm{sectf}(\mathrm{sectf}(G)). \tag{5}$$

Because it is equal to its own inverse, it follows from Lemma 1 that sectf also maps sector[O, ∞] onto sector[– 1, 1]. Thus, the sector transform sectf can be used to transform H^∞ control synthesis problems into positive real control synthesis problems and vice versa -- see Figure 2.

Since the sector transform sectf is equal to its own inverse, the stability and robustness properties arc unaffected by the insertion of the two sectf transformations. The transformed T and A matrices are given by

$$\tilde{T} = \mathrm{lftf}(\mathrm{SECTF},\ \mathrm{T}) = \mathrm{sectf}(T) = (I - T)(I + T)^{-1} \tag{6}$$

$$\mathrm{A} = \mathrm{lftf}(\Delta, \mathrm{SECTF}) = -\ \mathrm{sectf}(-\ \mathrm{A}) = -(I + \Delta)(I - \Delta)^{-1} \tag{7}$$

One readily checks that A has the same diagonal structure as A, viz.,

$$\tilde{\Delta} = \mathrm{diag}(\tilde{\Delta}_1, \ldots, \tilde{\Delta}_p) \tag{8}$$

where

$$\tilde{\Delta}_i = -\ \mathrm{sectf}(-\Delta_i) = -(I_{k_i} + \Delta_i)(I_{k_i} - \Delta_i)^{-1} \tag{9}$$

Since by hypothesis $\Delta_i \in$ sector[–1, 1], we also have $-\Delta_i \in$ sector[–1,1] and hence by Lemma 1

$$-\tilde{\Delta}_i \in \mathrm{sector}[0, \infty]. \tag{10}$$

Further, it is clear from (9) that $\tilde{\Delta}_i \in \mathcal{R}$ U {00} if and only if $\mathrm{A}_i \in \mathcal{R}$ U $\{\infty\}$.

The class of multipliers which have the desired property of preserving the sectoricity of the transformed uncertainty matrix $\tilde{\Delta}$ are those in the closure of the set M defined as follows:

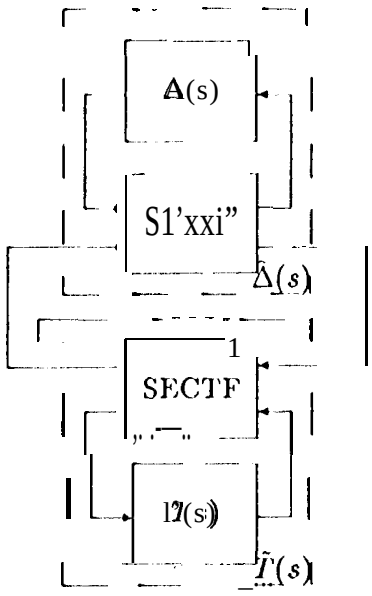

Figure 2: Transformation of H^∞ synthesis to positive-real synthesis.

Definition 2 *The class M of* multiplier *matrices for the K",-synthesis problem* is *defined to be the* set of *transfer function matrices satisfying*

$$\mathrm{herm}(M_{k_i}(j\omega)) > 0 \quad \forall\omega \tag{11}$$

where M(s) is of *the diagonal form*

$$M(s) = \mathrm{diag}(m_1(s)I_{k_1}, m_2(s)I_{k_2}, \ldots, m_p(s)I_{k_p}) \tag{12}$$

and the $m_i(s)$ are non-zero scalar valued transfer functions, having no poles or zeros on *the $j\omega$-axis, with real coefficients and* with *the* additional *property that, if Δ_i* is *a complex uncertainty then the corresponding $m_i(j\omega)$ is real; i.e.,*

$$\mathrm{Im}\, m_i(j\omega)) = 0 \quad \forall\omega, \quad \text{if } \Delta_i \text{ is a complex uncertainty block.} \tag{13}$$

It is clear that if $M(s)$ is invertible, then $M(s) \in \mathcal{M}$ if and only if $(M(s))^{-1} \in \mathcal{M}$. While in general the members of the class *M* are neither stable nor minimum-phase, we note *any M(s)* $\in M$ can be factored as

$$\mathrm{M(s)} = (M_2^*(s))^{-1} M_1(s) \tag{14}$$

where M_1 and h4$_2$ and their inverses are stable and rational. We further have the following result:

Lemma 2 *Let Ml(s) and $M_2(s)$ be stable transfer function matrices with stable inverses satisfying (14) and let G(s) be a stable transfer junction matrix. Then,*

$$\mathrm{herm}(M(j\omega)G(j\omega)) > 0 \quad \forall\omega \tag{15}$$

if and only if

$$M_1(s)G(s)M_2(s) \in \mathrm{sector}[0, \infty] \tag{16}$$

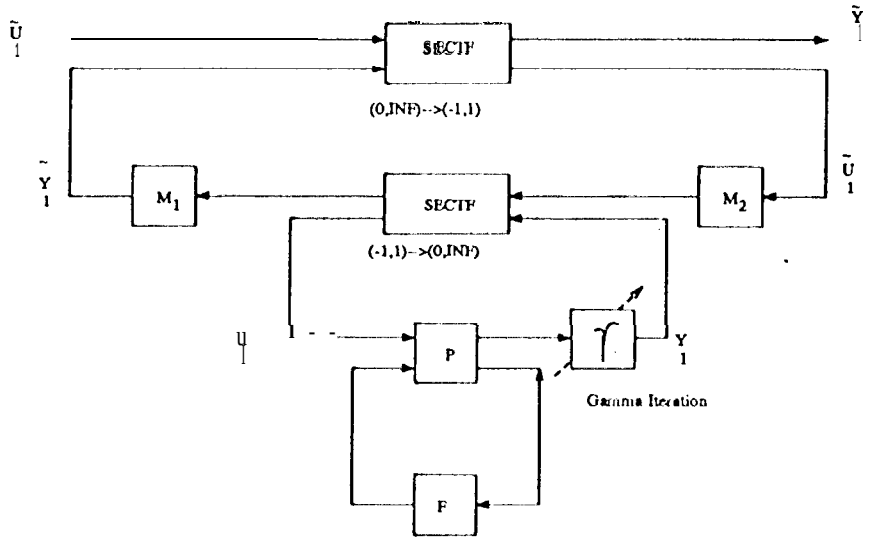

Figure 3: K_m-Synthesis with Multipliers

Proof: Multiply $M_1(s)G(s)M_2$ on left and right by $(M_2^{-1})^*$ and M_2^{-1} respectively. The result follows. ,

The implication of Lemma 2 is that one need not actually compute the stable minimum phase factors M_1 (s), $M_2(s)$ of $M(s)$ in order to determine their existence; rather, it suffices verify that some $M \in \mathcal{M}$ satisfies the frequency response condition (1 5).

The multipliers in $M \in M$ have the key property that for any admissible block diagonal matrix $\Delta, M_2^{-1}\Delta M_1^{-1}$ "is inside sector[0, cm] if and only if A is inside sector[0, cm]. The classical Popov multiplier $1+qs$ is in the class $\mathcal{M}$; we therefore refer the multipliers $M \in \mathcal{M}$ *as generalized Popov multipliers.* (Of course, if wc wanted to consider nonlinear A,'s as did Popov, then it would be necessary to impose other more complicated restrictions as in [29, 30] in our Definition 2 of $\mathcal{M}$.)

The multiplier formulation of the mixed real/complex uncertainty K_m-synthesis problem formulation goes as follows (See Figure 3)

$$\max \gamma \tag{17}$$

subject to the constraints that the controller $F(s)$ be stabilizing and

$$(M_2^*)^{-1} M_1 \in \mathcal{M}$$

$$\|T_{\tilde{y}_1 \tilde{u}_1}\|_\infty \leq 1.$$

in other words, we want to find the greatest real number γ such that for some generalized Popov multiplier M the infinity norm of the cost function $T_{\tilde{y}_1 \tilde{u}_1}$ is less than or equal to one. For such a controller, the corresponding γ will be a lower bound on the size of the smallest destabilizing real uncertainties.

Our multiplier-based mixed real/complex Kn,-synthesis design procedure is summarized by the following conceptual algorithm, essentially a straightforward adaptation to the multiplier context of the $D-F$ iteration of the traditional diagonal scaling approach [], 2]. The algorithm returns the K_m -syntheses control law $F_{best}(s)$ along with the corresponding multiplier $M_{best} \in \mathcal{M}$ and cost $\gamma_{best} := 1/\sup_\omega \mu(T_{y_1 u_1}(j\omega))$. The algorithm involves an "M-F iteration" in which one iteratively alternates between (i) fixing the multiplier $M(s)$ and solving for an H^∞ optimal control law

$F(s)$ and (ii) fixing the controller $F(s)$ and optimizing the multiplier $M(s) \in \mathcal{M}$. The algorithm terminates when neither (i) nor (ii) results in any further improvement in γ_{best}. See Figure 3.

Algorithm 1 (Multiplier p-Synthesis)

Step 1 *initialize by solving the conventional* $\mathbf{H}^\infty$ *optimal control problem of* finding a stabilizing H^∞ *controller* $F(s)$ *which maximizes the value of* γ *for which*

$$\|T_{y_1 u_1}\|_\infty \leq 1.$$

Set $M_{best}(s) = M_1(s) = M_2(s) = I$, $F_{best}(s) = F(s)$, $\gamma_{best} = \gamma_{oldbest} = \gamma$. *(Note that, for this value of* γ, $T_{\tilde{y}_1 \tilde{u}_1}$ *is inside* sector$[-1, 1]$ *and* $T_{\tilde{y}_1 \tilde{u}_1}$ *is inside* sector$[0, \infty]$.*)*

Step 2 *Iteratively increase* γ *and solve the convex optimization problem of computing an improved* $M(s) \in \mathcal{M}$ *so as to maximize*

$$\rho_M = \min_{\|x\|=1} x^*(herm(M(j\omega)T_{\tilde{y}_1 \tilde{u}_1}(j\omega)))x. \tag{18}$$

If $\rho_M > 0$ *set* $\gamma_{best} = \gamma$, $M_{best}(s) = M(s)$ *and repeat Step 2; otherwise,* continue *to Step 3.*

Step *3 Compute the factorization* $M_{best} = (M_2^*)^{-1} M_1$ *and augment the plant as shown* in *Figure 3.*

Step 4 *Increase* 7 *and solve the* H^∞ *optimal control problem finding a stabilizing controller F(s) which rnin im izes the cost*

$$\rho_F = \min_{stabilizing\ F(s)} \|T_{\tilde{y}_1 \tilde{u}_1}\|_\infty.$$

If $\rho_F \leq 1$ *set* $F_{best}(s) = F(s)$ *and repeat Step 4; otherwise continue to Step 5.*

Step 5 *If* $\gamma_{oldbest} < \gamma_{best}$, *set* $\gamma_{oldbest} = \gamma_{best}$ *and goto Step 2; otherwise stop.*

□

Comments:

(i) A standard "-y-iteration" binary search would be an appropriate method for iteratively adjusting 7 as required in Steps *2* and *4* of the foregoing conceptual algorithm.

(ii) There is a. close relation between the multiplier approach to p-synthesis and the diagonal scalings used in the traditional complex μ-synthesis. If $D(s)$ is a stable minimum-phase invertible diagonal matrix such that $\bar{\sigma}(DTD^{-1}) < 1$, then it may be easily shown that M(s) $= D^*(s)D(s)$ is in the class M and satisfies herm$(M(s)$ sectf$(T(s)))$ > O; in this case one may take Ml(s) = D(s) and $M_2(s) = D^{-1}(s)$. Moreover, if only complex uncertainties A_i are present, then every multiplier $M \in M$ *has* the property that it is positive and real for all frequency $j\omega$ and hence factorizable as *M(s)* $= D^*(s)D(s)$ for some stable minimun~-phase D(s). It follows that diagonal scaling conditions of complex p-synthesis may be regarded as equivalent to our multiplier conditions; of course, when some of the uncertainties are real our multiplier approach is more powerful (i.e., less conservative).

(iii) A subtle, but critically important problem arises in the above algorithm because the optimization of $M(s)$ in Step 2 is most naturally addressed pointwise at each, leading to an irrational frequency response representation of $M(j\omega)$ whereas the H^∞ Optimization in Step 4 requires finite-dimensional state-space realization for $M(s)$. Indeed, since the order of the H^∞ control law $F(s)$ that is computed in Step 4 is generically equal to one less than the order $M_1(s)T_{\hat{y}_1\hat{u}_1}M_2(s)$, it is desirable that the order of $M(s)$ be fixed at some reasonably small value lest the control law $F(s)$ be too complicated to implement. q'bus, in Step 2 it is critical that the multiplier optimization be subject to an order constraint. One might handle this first ignoring the order constraint and computing the optimal $M(j\omega)$ at each frequency ω, then doing a rational or polynomial curve fit to find a finite order approximation to $M(j\omega)$. This is analogous to the curve fitting that is used with the diagonal-scaling frequency responses $D(j\omega)$ that arise in the conventional approach to the complex K_m -synthesis problem [1, 2,3, 4]. However, the use of such curve fitting is far from satisfactory since there is no a priori way to assess the tradeof' between the accuracy of the curve fit and the resultant degradation in achievable performance γ. Fortunately, as we will show, the affine nature of the multiplier optimization problem makes it practical to directly impose an order constraint on M(s) in performing the multiplier optimization in Step 2, thereby bypassing the awkward and difficult curve fitting step associated with the conventional approaches to K_m -synthesis.

IV Fixed-Order and Polynomial Multipliers

As we have noted, a critical step in the multiplier formulation of the Km-synthesis problem is the computation of the optimal $M(s)$ subject to an order constraint. Mathematically, the problem may be formulated as follows: Given a transfer function $T(s)$ and a nonnegative integer p, to find an order p rational, biproper diagonal multiplier matrix $M(s) = \mathrm{diag}\{m_i(s)I_{k_i}\} \in$ M for which the matrix $\mathrm{herm}(M(s)T(s)$ is nonnegative definite. That is, we wish to find an $M(s) \in M$ such that

$$\mathrm{herm}(M(j\omega)T(j\omega)) > 0 \quad \forall w. \tag{19}$$

Equivalently, we wish to find $M(s) \in M$ such that

$$x^* \,\mathrm{herm}(M(j\omega)T(j\omega))x > 0 \;\; \forall\omega, \forall\|x\| = 1. \tag{20}$$

'l'he weak point in the conventional approach to μ-synthesis is this step. In the conventional approach to complex K_m-synthesis [1, 2, 3, 4] one computes an optimal diagonal scaling, say $D(j\omega)$, pointwise at each frequency w. One then does an *ad hoc* curve fit in order to find a low-order rational approximation D(s) to the optimal $D(j\omega)$. Alas, the sensitivity of $\mu(T_{y_1u_1})$ to the resultant inaccuracy in $D(s)$ cannot be determined a priori and there is no single good measure of what constitutes a good approximation.

One could employ essentially the same curve fitting approach in the multiplier case, but this would likely lead to the same sensitivity problems that beleaguer curve fitting in the diagonal scaling approach to K_m-synthesis. Indeed, the sensitivity of $\mu(\mathrm{sectf}(M(s)\mathrm{sectf}(\gamma T_{y_1u_1}(s))))$ to variations in $M(s)$ will in general be very difficult to assess a priori. Moreover, the problem of finding a suitable low-order rational approximation to $M(s)$ is compounded by the constraint that the approximant must be in M. ~'bus, it would be much preferable if curve fitting could be bypassed altogether and instead the order constraint were explicitly imposed on the M(s) optimization of Step 2 of Algorithm 1. As we shall show, this is easy to do in tile [multiplier framework,

The following lemma establishes that in searching for *rational* multipliers satisfying (19) we may without loss of generality confine our attention to real *polynomial* multipliers; i.e., elements of $\mathcal{M}$ for which the diagonal multiplier transfer functions $m_i(s)$ arc of the forms

$$m_i(s) = \sum_{j=0}^{n} m_{ij}\, s^j\,, \quad \text{if } \Delta_i \in \mathcal{R} \tag{21}$$

$$m_i(s) = \sum_{j=0}^{n} m_{ij}\, s^j, \quad \text{if } \Delta_i \in \mathrm{C}. \tag{22}$$

Lemma 3 *Equation (19)* is *satisfied for some real rational* $M(s) \in M$ *if and only if there exists a real polynomial M(s)* $\in M$ *for which (19) holds. Moreover,* if *such a rational M(s)* is *factored* as $M(s) = \frac{1}{d(s)} N(s)$ *where* N(s) *is a polynomial matrix and d(s) is scalar valued polynomial, then the degree of the corresponding polynomial matrix M(s) need not be greater than the sum of the degrees of* $d(s)$ *and N(s).*

Proof: First note that for any $n \times n$ invertible matrix S we have

$$T > 0 \Leftrightarrow STS^* > 0. \tag{23}$$

Also note that any rational $M(s) \in \mathcal{M}$ may be written as $\frac{1}{d(s)} N(s)$. Taking $S = d(s)I$ in (23), it follows that

$$\mathrm{herm}(MT) > 0 \Leftrightarrow \mathrm{herm}(\tilde{M}T) > 0 \tag{24}$$

where $\tilde{M}(s) = d^*(s)\, d(s) M(s) = d^* N(s) \in \mathcal{M}$ is a diagonal polynomial matrix of degree equal to the sum of the degrees of $N(s)$ and $d(s)$. □

Comments:

(i) Of course, in some situations it is preferable to work with strictly proper transfer functions M(s) which, unlike polynomials, may be realized in state-space form. Thus, if one has computed a polynomial $M(s)$, it is always possible to determine an equivalent proper multiplier by performing the reverse of the operations in the proof of Lemma 3. That is, one may always substitute for $M(s)$ the equivalent proper multiplier

$$\tilde{M}(s) = \frac{1}{d^*(s)\, d(s)} M(s)$$

where d(s) is *any* scalar polynomial of degree at least half that of $M(s)$.

(ii) Since polynomials are linear in their coefficients and Lemma 3 implies that in our search for a fixed order *M(s) we* may restrict our attention to polynomials. The implication is that the order-constrained multiplier optimization that one would like to solve in Step 2 of Algorithm 1 may be directly treated as a convex optimization over the coefficients of the polynomials $m_i(s)$, $(i = 1, \ldots, p)$. That is, we may bypass the need for curve fitting without losing convexity or otherwise complicating the problem in any significant way.

(iii) One may readily generalize Lemma 3 by substituting polynomials in functions of s for polynomials in s. For example, it would also suffice to consider, say, $m_i(s)$ polynomials in (as + b)/(cs + 6) where *a, b, c, d* are given scalars. This may have advantages when one prefers to have $M(s)$ be proper so as to be state-space realizable.

V Main Results

The above results establish that the fixed order multiplier optimization may be treated by optimizing the cost (19) over the set of $M(s) = \mathrm{diag}\{m_i(s) I_{k_i}\} \in M$ for which the S1S0 transfer functions $m_i(s)$ arc polynomials of a fixed degree with real coeficients; that is,

$$m_i(s) = \sum_{j=0}^{\deg(m_i(s))} m_{ij} s^j, \text{ 'f } \Delta_i \in \mathcal{R} \tag{25}$$

and

$$m_i(s) = \sum_{j=0}^{\deg(m_i(s))/2} m_{ij}^{2j} s \qquad \text{if } \Delta_i \in \mathcal{C} \tag{26}$$

where $m_{ij} \in \mathcal{R}$. Note that the polynomials (26) corresponding to complex Δ_i arc restricted to be have even degree and to have only even powers of s; this is necessary and sufficient to ensure that $m_i(j\omega) \in \mathcal{R}\ \forall\omega$ for each complex Δ_i as required by Definition 2. Thus the number, say r_i, of coeficients m_{ij} in the i-th multiplier $m_i(s)$ is

$$r_i = \begin{cases} 1 + \deg(m_i(s)), & \text{if } \Delta_i \in \mathcal{R} \\ 1 + \deg(m_i(s))/2, & \text{if } \Delta_i \in \mathcal{C}. \end{cases} \tag{27}$$

Notice that an $M(s)$ satisfying (25,26) is an clement of M if and only if it satisfies the condition $\mathrm{herm}(M(j\omega)) > 0\ \forall\omega$ — this is a condition of the same form as (19), except with $T(j\omega) = I$. Since for any two hermitian matrices A, B, it holds that $\mathrm{diag}(A, B) > 0$ if and only if both $A > 0$ and $B > 0$, wc have the following result.

Theorem 1 *Let $\tilde{\mathcal{M}}$ be a subset of M, let l'(s) be transfer function matrix, and let*

$$Q(s, M(s)) := \mathrm{herm}(\mathrm{diag}(M(s), M(\ (s)?'(s))). \tag{28}$$

Then there exists a multiplier M(s) $\in$ M satisfying (19) if and only if

$$\rho := \inf_{x \in \mathcal{S}} \int_{-\infty}^{\infty} x^*(j\omega) Q(j\omega, M(j\omega)) x(j\omega)\, d\omega > 0 \tag{29}$$

□

In what follows we shall restrict our attention to a particular subset M of M.

1 **Definition** *3 M is the set of all polynomial $M \in \mathcal{M}$ satisfying (25,26) hold.*

□

Suppose $M \in M$. Define $z \in \mathcal{R}^{n_z}$ as

$$z := \underset{i=1,\ldots,p}{\mathrm{Col}} \ \underset{j=0,\ldots,(r_i-1)}{\mathrm{col}} \{m_{ij}\} \tag{30}$$

where

$$n_z := \sum_{i=1}^{p} r_i. \tag{31}$$

'1'bus, $z \in \mathcal{R}^{n_z}$ is a column vector whose elements are the m_{ij}'s. Clearly, for any $M \in \tilde{\mathcal{M}}$ we have that $Q(s, M(s))$ may be additively decomposed as

$$Q(s,\ M(s)) := \sum_{i=1}^{n_z} z_i Q_i(s) \tag{32}$$

where $Q_i(s)$ arc hermitian matrices that do not depend on the coeficients m_{ij}.

We further define the function

$$f(x) := \underset{i=1,\ldots,n_z}{\mathrm{col}} \int_{-\infty}^{\infty} x^*(j\omega) Q_i(j\omega) x(j\omega)\, d\omega \tag{33}$$

With this definition, the argument of equation (29) may be written equivalently as $z^T f(x)$; that is,

$$z^T f(x) \equiv \int_{-\infty}^{\infty} x^*(j\omega) Q(j\omega, M(j\omega)) x(j\omega)\, d\omega. \tag{34}$$

This leads to our main result, a corollary to Theorem 1 characterizing the computation of the optimal fixed order polynomial multiplier matrices satisfying (19) in terms of a sort of numerical range optimization problem -- a problem for which there are known and reliable solution approaches (e.g., [21, 24].)

Corollary 1 (Key Result) *Let* M be *a subset of M and let 7'(s) be transfer function matrix. Then there exists a multiplier M(s) ∈ M satisfying (19)* if *and only if*

$$0 \notin \mathrm{co}(f(\mathcal{S})) \tag{35}$$

Proof: From Theorem 1, the existence of a multiplier in M satisfying (19) is equivalent to existence of a $z \in \mathcal{R}^{n_z}$ such that

$$\inf_{x \in \mathcal{S}} z^T f(x) > 0 \tag{36}$$

which is equivalent to (35). □

VI Algorithm and Convergence

Corollary 1 establishes that the problem of finding a polynomial $M(s) \in$ M such that (19) holds is equivalent to the problem of determining whether or not the point O $\in \mathcal{R}^{n_z}$ is in the convex hull of the set *f(S)* $\in \mathcal{R}^{n_z}$. This condition may be tested via the following algorithm. Since the condition O $\notin \mathrm{co}(f(\mathcal{S}))$ is equivalent to the existence of a hyperplane separating *f(S)* from O; i.e., it is equivalent to the existence of a $z \in \mathcal{R}^{n_z}$ such that (36) holds. Any such z gives us the desired multiplier M(s) ∈ M, z being simply the vector (30) containing the coefficients m_{ij} of the polynomials $m_i(s)$ on the diagonal of the desired polynomial matrix M(s) ∈ M. Keeping the foregoing in mind, we are led to our main result, the following conceptual algorithm for a computing a multiplier for which (19) holds.

Algorithm 2 (**Fixed-Order** Multiplier Optimization)

Step 1 *initialize by choosing* a point $z^{(1)} \in \mathrm{co}(f(\mathcal{S}))$ *and* setting *k=1. Choose a small convergence tolerance* $\epsilon > 0$.

Step 2 *Fix $z = z^{(k)}$ and set the coefficients m_{ij} of $M(s)$ equal to the values determined by z. Solve the infimization*

$$\inf_{x \in \mathcal{S}} \int_{-\infty}^{\infty} x^*(j\omega) Q(s, M(s)) x(j\omega)\, d\omega \tag{37}$$

and let $f^{(k)}$ be the minimizing value of f(x). If the infimum (37) is positive, stop M(s) is the desired multiplier satisfying 19; otherwise continue to Step 3.

Step 3 *Compute the minimum norm element in co{ $f^{(k)}, z^{(k)}$}:*

$$z^{(k+1)} = z^{(k)} + \min\{\alpha, 1\}(f^{(k)} - z^{(k)}) \tag{38}$$

where

$$\alpha = \frac{(f^{(k)} - z^{(k)})^T z^{(k)}}{(f^{(k)} - z^{(k)})^T (f^{(k)} - z^{(k)})} \tag{39}$$

If $\|z^{(k+1)}\| <$ c stop; otherwise, set increment k by one and return to Step 2.

□

The following theorem establishes that, when $\epsilon = O$, Algorithm 2 is globally convergent to the unique minimum norm element of $\mathrm{co}(f(\mathcal{S}))$.

Theorem 2 (Convergence) *Suppose $\epsilon = O$. If there exists a multiplier $M(s) \in M$ such that (19) holds then Algorithm 2 converges as $k \to \infty$ to a corresponding $z \in$ 72'"; otherwise it converges to $z = o$.*

Proof: The result is essentially an application of Theorem 2 of [31]. Note that the Algorithm '2 implicitly defines a mapping, say g : $\mathcal{R}^{n_z} \to \mathcal{R}^{n_z}$ which maps $z^{(k)}$ into $z^{(k+1)}$, i.e.,

$$z^{(k+1)} = g(z^{(k)}). \tag{40}$$

Further, the mapping g : $\mathcal{R}^{n_z} \to \mathcal{R}^{n_z}$ maps the compact set $\mathrm{co}(f(\mathcal{S}))$ into itself **and** is contractive in the sense that, for some continuous function $\phi : \mathcal{R}$ -+ $\mathcal{R}$ with $\phi(0)$ = O and $\phi(\epsilon)$ >0 $\forall\epsilon$ >0,

$$119(\sim)115 \quad (1 - \phi(\|z - z_{opt}\|))\, \|z\| \tag{41}$$

where z_{opt} denotes the unique minimum norm element of the closed, convex, compact set $\mathrm{co}(f(\mathcal{S})) \subset \mathcal{R}^{n_z}$. It follows that at each iteration $\|z^{(k+1)}\| \leq \|z^{(k)}\|$ with equality holding if and only if $z^{(k)} = z_{opt}$ and that the sequence $\{z^{(k)}\}$ is globally convergent to z_{opt} - see [31] for further details. Further, since z_{opt} is the minimum norm element of $\mathrm{co}(f(\mathcal{S}))$, it follows that if $z_{opt} \# 0$, then $z_{opt}^T f(x) > 0\ \forall x \in \mathcal{S}$ and the coefficients m_{ij} of the corresponding multiplier are the elements of the vector $z \in \mathcal{R}^{n_z}$ - see (30,32). Otherwise, the unique minimum norm element of Co(j(L$)) is $z_{opt} = O$. The result follows from Corollary 1. □

The question remains, how can one perform the optimization over x required in Step 2 of Algorithm 2? It turns out that this is actually quite easy as a consequence of the following variant of the Positive Real Lemma [32].

Lemma 4 *Consider the transfer junction $G(s) = C(Is - A)^{-1}B + D$. Suppose the matrix* herm$(D) - \gamma I$ *is invertible and that the* pair {A, B} *is stabilizable. Then $G(j\omega)$* satisfies

$$\mathrm{herm}(G(j\omega)) > \gamma I\ \forall\omega \tag{42}$$

if and *only if* $R > 0$ *and the hamiltonian system matrix*

$$H = \begin{bmatrix} A - BR^{-1}C & -BR^{-1}B^* \\ C^*R^{-1}C & -(A - BR^{-1}C)^* \end{bmatrix} \tag{43}$$

where

$$R = D + D^* - 2\gamma I \tag{44}$$

has no eigenvalues on the imaginary axis of the complex plane. Furthermore, if γ_0 is *the least* γ *for which (42)* jails *to hold or, equivalently, jor which* **(43)** *has a* $j\omega$*-axis eigenvalue at, say,* $j\omega_0$ *then*

$$\inf_{x \in S} \int_{-\infty}^{\infty} x^*(j\omega)\,\mathrm{herm}(G(j\omega) - \gamma_0 I)x(j\omega)\,d\omega = 0 \tag{45}$$

and an *infimizing sequence* $\{x^{(k)}\}_{k=0}^{\infty}$ is

$$x(j\omega) = x_0 u^{(k)}(\omega - W_0) \tag{46}$$

where $\{u^{(k)}\}_{k=0}^{\infty}$ *is any sequence in S such that* $|u^{(k)}(j\omega)|^2$ *converges to the Dime delta function and* x_0 *is any unit vector in the nullspace of* $\mathrm{herm}(\gamma_0 I - G(j\omega_0))$, i.e., any vector satisfying

$$\mathrm{herm}(\gamma_0 I - G(j\omega_0))x_0 = 0. \tag{47}$$

Proof: We only give a brief sketch. Clearly $\mathrm{herm}(G(j\omega)) > 7$ holds if and only if $G(j\omega)) + G(j\omega))^* - 2\gamma I = 7'''(.s)7'(s)$ for some stable, minimum-phase T(s), i.e., if and only if $G(j\omega)) + G(j\omega))^* - 2\gamma I$ has a spectra] factor $T(s)$ with all its poles and zeros strictly in the left half of the complex plane C. But, under the assumptions of the lemma, this is equivalent to the solvability of the linear quad ratic state-feedback optimal cent rol problem of minimi zing the cost

$$J = \int_0^{\infty} \begin{bmatrix} x^* & u^* \end{bmatrix} \begin{bmatrix} 0 & C^* \\ C & D + D^* - 2\gamma I \end{bmatrix} \begin{bmatrix} x \\ u \end{bmatrix} dt. \tag{48}$$

for the plant

$$\dot{x} = Ax + Bu. \tag{49}$$

and this linear quadratic state-feedback problem has a solution if and only if the corresponding Hamiltonian system matrix has no imaginary-axis eigenvalues. Note that in our case the cost (48) has (43) as its associated Hamiltonian system matrix. 'l'hat x_0 and ω_0 exist satisfying (47) is readily seen by observing that since $\gamma = 7_0$ there is a frequency W. at which $\mathrm{herm}(G(j\omega))$ is positive semi-definite, but not positive definite. That the sequence $\{u^{(k)}\}_{k=0}^{\infty}$ is infimizing may be seen by observing that, if $x(j\omega)$ is taken to be as in (46), then (47) implies that the limiting value as $k \to 00$ of the integral (45) is zero. □

Of course, the foregoing Lemma is only useful if the transfer function $G(s)$ is state-space realizable in the form $G(s) = C(Is - A)^{-1}B + D$. Fortunately, even for polynomial multipliers an invertible matrix S(s) can always be chosen so that even if

$$M(s)G(s) \tag{50}$$

does not have a state space realization of the form required by Lemma 4, the matrix

$$\mathbf{S(S)}\ \mathrm{M(S)}\ \mathrm{C'(S)}\ \mathbf{S''(S)} \tag{.51}$$

dots, Noting that for any invertible $S(s)$, berm of (50) is positive semidefinite if and only if herm of (51) is too, it suffices to apply Lemma 4 to the transformed system Sags* in order to determine whether $\mathrm{herm}\, M(j\omega)S(j\omega) > 0$ VW. For example, in the case of polynomial $M(s)$ and proper G(s) one may take $5'(s) = M^{-1}(s)$ to obtain a proper $G(s)M^{-1}(s)$.

VII Conclusions

The weak point of traditional approaches to K_m -synthesis or p-synthesis has been the curve fitting step used to fit frequency responses of diagonal scaling functions with approximate rational realizaions. We have described a conceptual algorithm, ready for implementation on a digital computer, which enables onc to directly compute optima] fixed-order rational diagonal scalings and, more generally, optimal tixcd-order multipliers for mixed real/con~plcx A'w,-synthesis. Our main result is Algorithm 2. The algorithm is sufficiently flexible to handle both the traditional diagonal scaling approach used for complex-uncertainty and the more general multiplier approach introduced in [25] for mixed real/conlplex uncertainty. The algorithm reduces the problem of finding optimal fixed-order diagonal scalings and, more generally, optimal fixed-order diagonal multiplier matrices, to the finite dimensional convex optimization problem of determining if $0 \in \mathrm{co}(f(\mathcal{S}))$ c 7?'". We have proved that the algorithm is globally convergent to the unique minimum norm element of $\mathrm{co}(f(\mathcal{S}))$, that a multiplier exists if and only if this element is nonzero. Algorithm 2 is constructive in that, whenever a multiplier exists which satisfies (19), the algorithm always produces such a multiplier in a finite number of steps. Our results enable onc to bypass the awkward and imprecise curve-fitting step in K_m-synthesis/μ-synthesis, making the overall synthesis procedure practical and reliable.

VI.] 1 Acknowledgment

This research was supported in part by the U. S. Air Force Office of Scientific Research under Grant 1"49620-92-J-0014. It was also supported in part by Jet l'repulsion Lab, California institute of Technology, under a contract with National Aeronautics and Space Administration.

References

[1] M. G. Safonov. L^∞ optimal sensitivity vs. stability margin. In *Proceedings of the IEEE Conference on Decision and Control, Ncw* York, December 1983. IEEE Press, Albuquerque, NM.

[2] J. C. Doyle. Synthesis of robust controllers and filters with structured plant uncertainty, In *Proceedings of the IEEE Conference on* Decision *and Control, Ncw* York, December 1983. IEEE Press. Albuquerque, NM.

[3] G. J. Balas, J. C. Doyle, K. Glover, A. Packard, and R. Smith. *μ-Analysis and Synthesis Toolbox (/1- 7'00/s).* Mathworks, Natick, MA, 1991.

[4] R. Y. Chiang and M. G. Safonov. *Robust Control Toolbox, Ver.* 2.0. Mathworks, Natick, MA, 1992.

[5] M. G. Safonov and M. Athans. Gain and phase margin for multiloop LQG regulators. *IEEE Trans.* on *Automatic Control*, AC-22(2):173-178, 1977.

[6] M. G. Safonov and M. Athans. A multiloop generalization of the circle criterion for stability margin analysis. *IEEE Trans. on Automatic Control,* AC-26(2):415- *422,* April 1981.

[7] J.C. Doyle. Structured uncertainty in control system design. *IEE Proceedings,* 129- 1)(6):242- *2.50,* 1 %S2.

[8] I.W. Sandberg. On the 1_2- boundedness of solutions of nonlinear functional equations. *Bell System Technical Journal*, 43(4):1581- *1599, 1964.*

[9] G. Zames. On the input-output stability of time-varying nonlinear feedback systems - parts I and 11. *IEEE Trans. on Automatic Control, AC-15(2* and 3):228-238 and 465--467, April and July 1966.

10] 11.11. Rosenbrock. *Contputcr-Aided Control System Design.* Academic, New York, 1970.

11] M. G. Safonov and M. Athans. Gain and phase margin for multiloop LQG regulators. In *Proc. IEEE Conf. on Decision and Control,* pages *361--368,* Ncw York, December 1976. IEEE Press. Clearwater Beach, FL.

[12] M, G. Safonov. *Robustness and Stability Aspects of Stochastic Multivariable Feedback System Design.* PhD thesis, Dept. Elec. Eng., MIT, *1977.*

[13] M. G. Safonov. *Stability and Robustness of Multivariable Feedback Systems.* MIT Press, Cambridge, MA, 1980.

[14] J. C. Doyle. Robustness of multiloop linear feedback systems. In Proceedings *of the 1978 IEEE Conference on* Decision *and Control,* pages 12-18, Ncw York, 1979. IEEE. Orlando, FL, January 8-10, 1979.

[15] J. C. Doyle and G. Stein. Multivariable feedback design: Concepts for a classical/modern synthesis. *IEEE Trans. on Automatic* Control, AC-26(1):4- 16, February 1981.

[16] I. Postlethwaite, J. M. Edmunds, and A. G. J. MacFarlane. Principal gains and principal phases in the analysis of linear multivariable feedback systems. *IEEE* Trans. on *Automatic Control,* AC-26(1):32- 46, February 1981.

[17] N.A. Lehtomaki, N. R. Sandell, Jr., and M. Athans. Robustness results in linear-quadratic gaussian based multivariable control designs. *IEEE Trans. on A utomatic Control,* AC-26(1):75- *92,* February 1981.

18] M.G. Safonov. Stability margins of diagonally perturbed multi variable feedback systems. In *Proceedings of the IEEE Conference on* Decision *and Control,* San Diego, CA., December 1981. IEEE Press, Ncw York.

19] M. G. Safonov. Stability margins of diagonally perturbed multivariable feedback systems. *IEE Proceedings,* 129-D(6):251--255, 1982.

[20] M.K.H. Fan and A. I,. Tits. Characterization and efficient computation of the structured singular value. *IEEE Trans. on Automatic Control,* AC-31(8):734- *783,* August 1986.

[21] M. K. II. Fan and A. 1,. Tits. m-form numerical range and the computation of the structured singular value. *IEEE Trans. on Automatic Control,* AC-33(3):284-289, March 1988.

[22] J. C. Doyle. Structured uncertainty in control system design. In *Proceedings of the IEEE Conference on Decision and Control,* pages *260-265, New* York, December 1985. IEEE Press. Fort Lauderdale, FL.

[23] M. K. H. Fan, A. L. Tits, and J. C. Doyle. Robustness in the presence of mixed parametric uncertainty and unmodelled dynamics. *IEEE Trans. on Automatic Control, AC-36(1):25-38*, January 1991.

[24] M. G. Safonov and T. C. Lee. A multiplier method for commutating real multivariable stability margin. In *Proceedings IFAC World Congress*, July 1993. Submitted August 1992.

[25] R. Y. Chiang and M. G. Safonov. Real K_m-synthesis via generalized Popov multipliers. In Proc. *American Control Conf.*, New York, June 1992. IEEE. Chicago, IL.

[26] J. Doyle, K. Glover, P. Khargonekar, and B. Francis. State space solutions to standard H_2 and H_∞ control problems. *IEEE Trans. on Automatic Control*, AC-24(8):731-747, August 1988,

[27] M. G. Safonov, D. J. N. Limebeer, and R. Y. Chiang. Simplifying the H_∞ theory via loop-shifting, matrix-pencil and descriptor concepts. *International Journal of Control*, 50(6):2467-2488, 1989.

[28] C. A. Desoer and M. Vidyasagar. *Feedback Systems: Input-Output Properties*. Academic Press, New York, 1975.

[29] G. Zames and P. Falb. Stability conditions for systems with monotone and slope-restricted nonlinearities. *SIAM J. Control and Optimization*, 6:89-108, 1968.

[30] M. G. Safonov and G. Wyetzner. Computer-aided stability analysis renders Popov criterion obsolete. *IEEE Trans. on Automatic Control*, AC-32(12):1128-1131, 1987.

[31] E.G. Gilbert. An iterative procedure for computing the minimum of a quadratic form on a convex set. *SIAM J. Control*, 4(1):61-79, 1966.

[32] B.D.O. Anderson and S. Vongpanitlerd. *Network Analysis and Synthesis --- A Modern Systems Theory Approach*. Prentice-Hall, Englewood Cliffs, NJ, 1974.