DESIGNING MAGNETIC COMPONENTS FOR HIGH FREQUENCY DC-DC CONVERTERS

Colonel Wm. T. McLyman

DESIGNING MAGNETIC COMPONENTS FOR HIGH FREQUENCY DC-DC CONVERTERS

Other Books and Software by the Author

Books

Magnetic Core Selection for *Transformers and Inductors*
Marcel Dekker, 270 Madison Ave., New York, NY 10016

Transformer *and Inductor Design Handbook* (second edition)
Marcel Dekker, 270 Madison Ave., New York, NY 10016

Software

Computer *Aided Design* for inductors *and Transformers*
Kg Magnetics Inc. 2135 Huntington Drive Suite 201D, San Marino, Ca. 91108

Flyback Converter *Magnetics Design*
Kg Magnetics Inc. 2135 Huntington Drive Suite 201D, San Marine,Ca.91108

Magnetic Core Conversion
Kg Magnetics Inc. 2135 Huntington Drive Suite 201D, San Marirm,Ca.91108

Specialty I Design Magnetics
Kg Magnetics inc. 2135 Huntington Drive Suite 201D, San Marine,Ca.91108

Specialty 11 *Design Magnetics*
Kg Magnetics Inc. 2135 Huntington Drive Suite 201 D, San Marine,Ca.91108

Computer Aided Transformer and Inductor Analysis
Kg Magnetics Inc. 2135 Huntington Drive Suite 201D, San Marine,Ca.91108

There are also 17 leading manufacturers core data disks available.

When you buy the above software it will never becomes obsolete. The software is updated at least once a year. The only Charge is for postage and handling.

Kg Magnetics Inc.
2135 Huntington Drive
Suite 201D, San Marine, Ca. 91108
Phone (818) 568-8443
FAX (818) 568-8534

Metglas™ is a registered trademark of Allied-Signal, Inc.

Kool Mμ™ is a registered trademark of Magnetics, Division of Spang & Co.

Library of Congress Cataloging in Publication Data
McLyman Colonel William T.
Designing Magnetic Components for High Frequency DC-DC Converters

Bibliography : p.
Includes index.
1. Electronic transformers.

Copyright © 1993 by Kg Magnetics, Inc. All Rights Reserved

The design equations and format used in the examples presented in this book were taken from the author's design software programs. The titles of the software programs are mentioned earlier in this book, The design equations and design procedures are to be used by the individual engineer for design and evaluation of magnetic components. The design equations and/or design procedures illustrated in this book cannot be developed into software that can be disseminated in any form that would be in direct or indirect competition with the author's software. Neither this book nor any part may be reproduced or transmitted in any form or by any means, electronic or mechanical, including photocopying, microfilming, and recording, or by any information storage and retrieval system, without permission in writing from the publisher.

Kg Magnetics, Inc.
2135 Huntington Drive
Suite 201D
San Marine, Ca. 91108
Phone (818) 568-8443
FAX (818) 568-8534

Current printing (last digit)
1 0 9 8 7 6 5 4 3 2 1

PRINTED IN THE UNITED STATES OF AMERICA

Disclaimer

All statements, information, and data given herein are believed to be accurate and reliable, but are presented without guarantee, warranty, or responsibility of any kind, expressed or implied. Statements or suggestions concerning possible use of this book, including but not limited to the design of magnetic components, are made without representation or warranty that any such use is free of patent infringement, and are not recommendations to infringe any patents. The user should not assume that all safety measures are indicated, or that other measures may not be required.

Forward

Wrong

Foreword

If a "history of the evolution of United States education in the fields of power electronics is written at some point in time in the future, it will most certainly discuss the lack of educational courses in practical magnetics design that has continued since the end of World War II.

Even today, where magnetics design is often considered by many institutions of higher learning as an "outdated and outmoded" subject, this educational problem continues to flourish. Yet, every modern electronic product today requires some form of power-processing or power-conditioning circuit for proper operation, and those circuits enviably contain magnetic components.

Over the past fourteen years, Colonel McLyman's best-selling two books on magnetic design principles have provided working engineers with easy-to-use analytical tools to develop practical and reliable magnetic components of all varieties. These books have, for many of us, filled the educational void that our college engineering experiences left unfilled, and are now considered essential reading for new engineers entering the fields of power electronics design,

The book you hold in your hands represents Colonel McLyman's third and most unique written contribution to the design art of magnetics, this time concentrating on practical transformer and inductor design methods for DC-to-DC switchmode power converter circuits. Here, he has collected all of the popular converter circuits, together with a brief operation explanation for each variation followed by practical design examples of the their magnetic components. Like his previous books, this volume contains a wealth of other useful information on related magnetic design problems and associated magnetic core characteristics.

Fans of Colonel McLyman's past publications and his methods of step-by-step practical design examples of magnetic components will find this new book of great utility in designing transformers and inductors for high-frequency switchmode power converter circuits. Many thanks, Colonel, for your contributions over the years to the art of magnetics design, and congratulations for another job well done!

Gordon (Ed) Bloom
President / CEO
e / j BLOOM associates Inc.
November 1,1992

Preface

This book has been written primarily to assist the circuit design engineer with the design of power magnetics for different topologies used in dc to dc converters.

There are now available new integrated circuit pulse-width-modulating chips (PWM) that simplify the dc to dc converter design. These new PWM chips and the ease of their use have opened up many power circuit topologies from which the design engineer choose. Each circuit topology has its good and bad features. These features range from parts count, parts stress stability, and complexity, There is a tendency for the design engineers to stay with an established design with which they are more familiar even though the design may not be optimum for the application. This is done because of good results from past designs and a good handle on the design procedure for the power magnetic components.

The conversion process in power electronics requires the use of magnetic components which are often the heaviest and bulkiest items in the power conversion circuit. They also have a significant effect on the system's overall performance and efficiency. Accordingly, the design of such components has an important influence on overall system weight, power conversion efficiency, and cost. Because of the interdependence and interaction of parameters, judicious tradeoffs are necessary to achieve design optimization.

Traditionally, the design of magnetic components for power conversion circuits has been very time-consuming even for a single component, and extremely burdensome when multiple components are involved. The result, in many instances, is a component in which the design is not optimized.

The main goal of this book is to enlighten the engineer by a step-by-step design procedure for different types of power circuit topologies, The design engineer will be able to see various circuit topologies to compare performance, He/she will be able to see how the magnetics are designed to a given specification, from picking the core to selecting the correct wire size to meet the regulation and temperature rise. From these design examples the engineer can now assess the complexity of the design and make tradeoffs as to which is better suited for the application.

The material is organized so the student engineer or technician, starting at the beginning of the book and continuing through to the end, will gain a comprehensive knowledge in transformer and inductor design for different topologies used in dc to dc converters.

No responsibility is assumed by the author or the publisher for any infringement of patent or other rights of third parties which may result from the use of circuits, systems, or processes described or referred to in this book.

1 wish to thank the manufacturers represented in this book for their assistance in supplying technical data.

Colonel Wm. T. McLyrnan

Acknowledgments

In gathering the material for this book, the author has been fortunate in having the assistance and cooperation of several companies, and many people, The author wishes to express his gratitude to all of them. The list is too long to mention them all, However, there are some individuals and companies whose contributions have been significant, Colleagues at Magnetics include Robert Noah and Charles Eaves who supplied cores, test data, catalogs and Harry Savisky who helped so much with the editing of the final draft. My colleagues at Micrometals, Jim Cox and Walt Lewis, supplied cores, test data and catalogs. 1 would like to thank Joseph Elias of Allied Signal inc., Metglas Products, for supplying cores, test data and catalogs. 1 would also like to thank Ron Vinsant of Linear Technology, for supplying I.C's and catalogs.

There are some individuals 1 would also like to thank, Gordon Bloom and Jerry Fridenberg who provided their areas of expertise and valuable suggestions, and a long time friend of over 35 years, Charles (CT) Kleiner for his editing and his drive for clarity. I am also indebted to Kit Sum for his assistance in the detailed derivations of many of the formulas and his efforts in checking the methodologies used; also Robert Yahiro for his persistence in detail and consistency regarding the design examples. There are people here at JPL 1 want to thank: Robert Detwiler, my group supervisor, for his encouragement; Dr. Vatché Vorperian for his help in generating and clarifying some equations; and Michael Hasbach for building and testing all of the magnetic components used in the design examples.

Symbols

α	Regulation, %
A_c	effective cross section of the core, cm^2
A_p	area product, cm^4
At	surface area of the transformer, cm^2
A_w	wire area, cm^2
$A_{w(B)}$	bare wire area, cm^2
$A_{w(I)}$	insulated wire area, cm^2
A_{wp}	primary wire area, cm^2
A_{ws}	secondary wire area, cm^2
A_{wtp}	total primary wire area, cm^2
A_{wts}	total secondary wire area, cm^2
AWG	American Wire Gage
B_{ac}	alternating current flux density, tesla
ΔB	change in flux, tesla
B_{dc}	direct current flux density, tesla
B_m	flux density, tesla
B_r	residual flux density, tesla
B_s	saturation flux density, tesla
D	duty ratio
D_{max}	maximum duty ratio
D_{min}	minimum duty ratio
D_w	dwell duty ratio
E	voltage
Eng	energy, watt-second
η	efficiency
f	frequency, Hz
G	winding length, cm
δ	skin depth, cm
H	magnetizing force, oersteds
I	current, amps
I_c	charge current, amps

Symbols (cont.)

Al	delta current, amps
] d	diode current, amps
I_{In}	input current, amps
I_L	inductor current, amps
I_m	magnetizing current, amps
1_0	load current, amps
$I_{o(max)}$	maximum load current, amps
$I_{o(min)}$	minimum load current, amps
$'_P$	primary current, amps
I_{pk}	peak current, amps
I_{rms}	mot mean square current, amps
I_s	secondary current, amps
J	current density, amps per cm^2
K_e	electrical coefficient
Kf	wave form coefficient
K_g	core geometry coefficient
K_u	window utilization factor
L	inductance, henry
$L_{(min)}$	minimum inductance, henry
$L_{(max)}$	maximum inductance, henry
A	volt-seconds
λ	watt density, cm^2
l_g	gap, cm
l_m	magnetic path, cm
MLT	mean length turn, cm
MPL	magnetic path length, cm
μ_i	initial permeability
μ_Δ	incremental permeability
μ_m	core material permeability
μ_r	relative permeability

Symbols (cont.)

n	turns ratio
N	turns
N_g	gate turns
N_p	primary turns
N_s	secondary turns
O_w	overwind, %
P	watts
P_{Cu}	copper 10ss, watts
P_{fe}	core 10ss,' watts
P_m	input power, watts
P_{ob}	output power boost, watts
P_o	output power, watts
P_p	primary copper loss, watts
P_s	secondary copper loss, watts
P_Σ	total loss (core and copper), watts
P_t	total apparent power, watts
P_{to}	total secondary load power, watts
P_{tp}	primary apparent power, watts
P_{ts}	secondary apparent power, watts
R	resistance, ohms
R_{cu}	copper resistance, ohms
R_{max}	maximum load resistance (lowest current), ohms
R_{min}	minimum load resistance (highest current), ohms
R_o	load resistance, ohms
R_p	primary resistance, ohms
R_Q	transistor on resistance, ohms
R_s	secondary resistance, ohms
R_t	total resistance, ohms
SMPS	switched mode power supply
S_n	strands
S_{ng}	gate strands
S_{np}	primary strands
S_{ns}	secondary strands

Symbols (cont.)

S_1	conductor area / wire area
S_2	wound area / usable window
S_3	usable window area / window area
S_4	usable window area / usable window area + insulation area
T	total period, seconds
t_{on}	transistor on time, seconds
t_{off}	transistor off time, seconds
t_{pw}	pulse width, seconds
T_r	temperature rise, degrees C
t_s	time to saturate the mag-amp
t_w	dwell time, seconds
t_{tw}	total dwell time, seconds
VA	volt-amps
V_c	control voltage, volts
V_d	diode voltage drop, volts
V_m	input voltage, volts
V_{max}	maximum applied voltage
V_{min}	minimum applied voltage
V_o	output voltage, volts
V_p	primary voltage, volts
V_Q	voltage across device when on, volts
V_s	secondary voltage, volts
W	watts
W_a	window area, cm^2
w-s	watt-seconds
W_{tcu}	copper weight, grams
W_{tfe}	iron weight, grams

Contents

Forward vi
Preface vii
Acknowledgment ix
Symbols x

Chapter I

introduction 2
Magnetic Core and its Power Handling Capability 2
Core Geometry 3
Transformers 3
Inductors 4
Transformer Considerations 5
Apparent Power 5
Transformer with PWM 6
Inductor Considerations 8
Inductor Related Factors 9
PowderCore Considerations 11
Window Utilization Factor.. 14
Regulation and Copper Loss 16
Transformer Efficiency and Regulation 18
Pulse Width Modulators (PWM) Integrated Circuit 19
Voltage ModeControl 19
Current Mode Control 20
References 22

Chapter 2 Magnetics In Switching Circuits

Power Transformers in Switching Circuits
introduction 24
Push-Pull Switching Converter 24
Half Bridge Switching Converter. 26
Full or H Bridge Switching Converter 28
Single Ended Forward Switching Converter 31
Two Transistor Forward Switching Converter 33

Contents **(cont.)**

Current Fed Weinberg Switching Converter. 34
Mag-Amps for Switching Converters. 35
Single Forward Mag-Amp Switching Converter. 37
Push-Pull Mag-Amp Switching Converter. 38

Energy Storage Inductors in Switching Circuits
Introduction 40
Energy Transfer 40
The Continuous and Discontinuous Boundary 41
Buck Flyback Regulator 42
Boost Flyback labor 43
Buck-Boost Inverting Flyback Regulator 44
Isolated Buck-Boost Flyback Regulator. 46
Coupled Output Filter Inductor 47
Input Filter Inductor 49
Output Filter Inductor 50
References 52

Chapter 3 Power **Magnetics** Design Examples

Introduction 54
Engineering Design Notes.... 55
Push-Pull Converter Design using an RM Ferrite Core 63
Half Bridge Converter Design using a PQ Ferrite Core 75
Full Bridge Converter Design using aI'QFerriteCore 87
Single Ended Forward Converter Design using an ETD Ferrite Core 99
Two Transistor Forward Converter Design using an ETD Ferrite Core 111
Weinberg Converter Transformer Design using an EFD-30 FerriteCore. 121
WeinbergConverter Input Inductor Design using an MPP powder Core 131
Single Ended Forward Short Circuit Mag-Amp Design using Perm 80 141
Single Ended Forward Reg. Only Mag-Amp Design using Metglas 2714A 149
Push-Pull Converter with Reg. only Mag-Amp Design using Metglas 2714A 157
Input Inductor Design using an Iron Powder Core 165

Contents (cont.)

Buck Converter Design using a Metglas 2605TCA Gapped Core. 171
Boost Converter Design Dis-Current using an EPC Ferrite Core 179
Inverted B/B Conv. Design Dis-Current using an MIT' Powder Core. 189
Buck-Boost Isolated Design Dis-Current using an MPP Powder Core 199
Boost Converter Design Con-Current using a PQ Ferrite Core. 213
Inverted B/B Conv. Design Cont. Current using a Kool Mμ Powder Core. 221
Buck-Boost Isolated Design Cont. Current using an MPP Powder Core. 231
Coupled Inductor Design using an MIT' Powder Core 245
Single Ended Forward Output Filter Design using a High Flux Powder Core. . . . 255
Push-Pull Output Filter Design using a Hign Flux Powder Core. 263
Low Power Drive Transformer using a Ferrite Toroidal Core. 271
References 282

Chapter 4 Soft **Ferrites** Cores

introduction to Soft Ferrite Cores.. 284
Ferrite Material Cross Reference.. 285
Ferrite Core Manufacturers 286
information about Core Data Tables 288
1. Ferrite Core Data Tables
RM Core Data 289
PQ Core Data 290
RSCoreDat a 291
DSCore Data 292
EPCore Data 293
EC Core Data 294
ETDCore Data 295
El' CCoreDat a 296
PC Core Data 297
EFDCore Data 298
EE & El Lam Size Core Data..... 299
EE & El Core Data 300
Toroidal Core Data 302
EE & El Planar Core Data 304

Contents (cont.)

2. Ferrite Core Loss Curves

Ferrite Material Type P 2500μ 305

Ferrite Material Type F 3000μ 306

Ferrite Material Type R 2300μ 307

Ferrite Material Type K 1500μ 308

Ferrite Material Type W 10000μ 309

3. Ferrite Material Characteristics 310

F Material B-H Loop 311

K Material B-H Loop 311

P & R Material B-H Loop 312

WMaterial B-H Loop 312

References 313

Chapter 5 Iron Powder Cores

Introduction to Iron Powder Cores 316

iron Powder Core Manufacturers 317

information about CoreDataTables 318

1. Iron Powder Core Data Tables 319

2. Iron PowderC oreLossCurves

Micrometals 75p Material Type -26 325

Micrometals 35μ Material Type -08 326

Micrometals 55p Material Type -18 327

Micrometals 75μ Material Type -52 328

3. iron Powder versus DC Bias 329

4. Iron Powder Material Characteriscis Table 330

5. Iron Powder Cores B- HLoops.

Micrometals 35μ Material Type -08 331

Micrometals 55μ Material Type -18 331

Micrometals 75μ Material Type -26 332

Micrometals 75p Material Type -52 332

References 333

Chapter 6 Nickel-Iron Powder Cores

introduction to Nickel-Iron Powder Cores. 336

Nickel-Iron Powder Core Manufacturers. 337

Information about Core Data Tables. . . . . .. '338

1. MPP Powder Core Data Tables. 339

2. MPP Powder Core Loss Curves

Magnetics MPP 125μ 343

Magnetics MPP 60μ 344

Magnetics MPP 26μ 345

3. MPP Permeability versus DC Bias. 346

4. High Flux Powder Core Data Tables. 347

5. High Flux Powder Core Loss Curves

Magnetics High Flux 125p 351

Magnetics High Flux 60μ 352

Magnetics High Flux 26μ 353

6. High Flux Permeability versus DC Bias 354

7. Kool Mμ Powder Core Data Tables 355

8. Kool Mμ Powder Core Loss Curves

Magnetics Kool Mμ 125μ/60μ 359

9. Kool Mμ Permeability versus DC Bias 360

10. Nickel-Iron and Koo1 Mμ Powder Core Material Characteristics. 361

Molypermalloy B-H Loop 362

High Flux B-H Loop 362

Kool Mμ B-H Loop 363

References 364

Chapter 7 Nickel-Iron Tape Cores

introduction to Nickel-Iron Tape Cores. 366

Nickel-Iron Tape Core Manufacturers 367

information about Core Data Tables. 368

1. Nickel-Iron Core Data Tables

Nickel-Iron 0.5 mil 369

Nickel-Iron 1.0 mil l 370

Nickel-Iron 2.0 mil 371

2. Special Mag-Amp Toroidal Tape Cores
Permalloy 0.5 mil 372
Permalloy 1.0 mil 372
Amorphous 1.0 mil 372
3. Nickel-Iron Core Loss Curves
Permalloy 0.5 nail 373
Permalloy 1.0 lid 374
Permalloy 2.0 mil 375
Orthonol 1.0 mil 376
Orthonol 2.0 mil 377
Supermalloy 1.0 mil 378
Supermalloy 2.0 mil 379
4. Nickel-Iron and Amorophous tape Core Materials Charactersistics 380
Square Permalloy 80 DC Hysteresis Loop 381
1.0 mil Permalloy 80 100kHz Hysteresis Loop 381
0.5 nil Permalloy 80 100kHz Hysteresis Loop 382
1.0 mil Metglas 2714A 100kHz Hysteresis Loop 382
References 383

Chapter 8 Amorphous Tape Cores

introduction to Amorphous Tape Cores ....
Amorphous Tape Core Manufacturers 387
information about Core Data Tables 388
1. Amorphous Core Data Table
Tape Toroidal Core 1.0 mil 389
Gapped Tape Toroial Cores 1.0 mil 390
2. AmorphousCoreLossCurves
AmorphousType2714A 391
AmorphousType 2605SC 392
Amorphous Type 2605TCA 393
6. Arnorophous TapeCoreMaterials Characteristics.... 394
Metglas Type2605TCA DCHysteresisLoop 395
Metglas Type 2605SC DC Hysteresis Loop 395

Contents (cont.)

Metglas Type 2714A DC Hysteresis Loop. 396
Metglas Type 2705MF DC Hysteresis Loop 396
References 397

Chapter 9 Engineering Aids

Information about the wire able... 400
Wire table 401
Magnet Wire and Materials Manufacturers 402
Common converter waveforms, with rms values 404
Magnet Component Manufacturers 405
Transformer Parasitics s..... 407
1. Magnetic design example test circuits.
Introduction 414
Half bridge converter design example 302 test circuit 415
Full H bridge converter design example 303 test circuit. 416
Push-pull design converter example 301 test circuit 417
Single ended forward converter design example 304 test circuit 418
Buck converter design example 312 test circuit 419
Inverted buck-boost converter design example 314 & 317 test circuit . . 420
Boost converter design example 313 & 316 test circuit 421
Isolated buck-boost design example 315 & 318 test circuit 422
Forward converter mag-amp design example 308 test circuit 423
2. Parts List for the test circuits.
PWM LT1526B oscillator and output drive. 424
Half bridge converter design example 302 425
Full H bridge converter design example 303 426
Push-pull design converter example 301 427
Single ended forward converter design example 304 428
Buck converter design example 312... 429
Inverted buck-boost converter design example 314 & 317 430
Boost converter design example 313 & 316. 431

Contents (cont.)

Isolated buck-boost design example 315 & 318 432
Forward converter mag-amp design example .308 432
References 433
Bibliography 434
Index 435

List of Illustrations

Fig. 1.1 Typical EE ferrite core 2
Fig. 1.2 Full-wave bridge circuit 7
Fig. 1.3 Full-wave, center tapped circuit 7
Fig. 1.4 Push-pull, full-wave, center tapped circuit. 8
Fig. 1.5 Fringing flux around the gap of an inductor designed with a C core 11
Fig. 1.6 Flux density versus $I_{dc} + \Delta I$ 13
Fig. 1.7 Ratio of copper area versus wire area (not to scale) 14
Fig. 1.8 Winding configuration (fill Factor) 15
Fig. 1.9 Available winding area in a PQ-43220 15
Fig. 1.10 Simple transformer diagram 17
Fig. 1.11 Implementing a voltage mode pulse width rnodulator(PWM) 19
Fig. 1.12 implementing a current mode pulse width modulator (PWM) 20
Fig. 1.13 Transistor switching time and dwell time. 21

Fig. 2.1 Push-pull converter 25
Fig. 2,2 Push-pull ideal voltage and current waveforms. 25
Fig. 2.3 Half If bridge switching converter 27
Fig. 2.4 Half bridge ideal voltage and current waveforms. 27
Fig. 2,5 Full or H bridge switching converter, ... 29
Fig. 2,6 Full or H bridge ideal voltage and current waveforms. 29
Fig. 2.7 idealized push-pull B-H loop 30
Fig. 2.8 Push-pull with a square B-H op.... 30
Fig. 2.9 Single ended forward switching converter. 31
Fig. 2.10 Single ended forward ideal voltage and current waveforms. 31
Fig. 2.11 Idealized forward converter transformer B-H loop. 32
Fig. 2.12 Two transistor forward switching converter. 33
Fig. 2.13 Two transistor forward ideal voltage and current waveforms. 33
Fig. 2.14 Current fed Weinberg switching converter. 34
Fig. 2.15 Weinberg ideal voltage and current waveforms. 34
Fig. 2.16 Minimum load continuous current A; discontinuous current B.. 35
Fig. 2.17 Mag-Amp B-H loop in the unsaturated and saturated condition. 36

List of Illustrations (cont.)

Fig. 2.18 Single forward Mag-Amp switching Converter. 37
Fig. 2.19 Single ended forward Mag-Amp ideal voltage and current waveforms. . . . 37
Fig. 2.20 Push-pull Mag-Amp switching converter. 38
Fig. 2.21 Push-pull Mag-Amp ideal voltage and current waveforms. 38
Fig. 2.22 Continuous and discontinuous voltage and current waveforms. 40
Fig. 2.23 Continuous (A) and discontinuous (B), B-H loops showing ΔB and Al. 41
Fig, 2.24 Buck flyback switching converter with an input LC filter. 42
Fig. 2.2.5 Buck ideal voltage and current waveforms. 42
Fig. 2.26 Boost flyback switching converter with an input LC filter. 43
Fig. 2.27 Boost ideal voltage and current waveforms. 43
Fig. 2.28 Buck-boost inverting switching converter with an input LC filter. 45
Fig. 2.29 Inverting buck-boost ideal voltage and current waveforms. 45
Fig. 2.30 Buck-boost flyback switching converter with an input LC filter. 46
Fig. 2.31 Isolated buck-boost ideal voltage and current waveforms. 46
Fig. 2.32 Three output coupled inductor 48
Fig. 2.33 Typical coupled inductor ideal voltage and current waveforms. 48
Fig. 2.34 Simple input LC filter 49
Fig. 2.35 Input filter ideal voltage and current waveforms. 49
Fig. 2.36 Typical buck output inductor circuit. 51
Fig. 2.37 Typical buck output inductor ideal voltage and current waveforms. 52

Fig. 3.0A Typical ac current showing peak current I_pk and dwell time t_w. 59
Fig. 3.0B Typical dc current showing peak current I_{pk} and dwell time t_w. 59
Fig. 3.0C Typical secondary showing peak voltage V_{spk} and dwell time t_w. 60
Fig. 3.0D Typical ac current showing peak current I_{pk} and the average current. 60
Fig. 3.0E Typical push-pull dc to dc converter. 62

Fig. 3,1 Three output push-pull converter r.. 63
Fig. 3.2 Three output half bridge converter 75
Fig. 3.3 Three output full bridge converter. 87
Fig. 3.4 Two output single ended forward converter 99

List of Illustrations (cont.)

Fig. 3.5 Two transistor forward converter with two outputs. 111
Fig. 3.6 Push-pull Weinberg converter 121
Fig. 3.7 Weinberg current fed converter 131
Fig. 3.8 Single ended forward converter with mag-amp 141
Fig. 3.9 Single ended forward converter with mag-amp regulation only 149
Fig. 3.10 Push-pull converter with mag-amp 157
Fig. 3.11 Typical input filter inductor circuit. 165
Fig. 3.12 Buck regulator converter 171
Fig. 3.13 Discontinuous current boost converter 179
Fig. 3.14 Discontinuous current buck-boost converter 189
Fig. 3.15 Buck-boost isolated discontinuous current converter , ... 199
Fig. 3.16 Continuous current boost converter 211
Fig. 3.17 Continuous current inverted buck-boost converter 221
Fig. 3.18 Buck-boost isolated continuous current converter 231
Fig. 3.19 Single ended forward converter using a coupled inductor 245
Fig. 3.20 Single ended forward converter 255
Fig. 3.21 Push-pull converter witha single output 263
Fig. 3.22 Lowpower drive transformer.. 271

Fig. 4.1 Magnetics ferrite material type P@ 80 'C core loss curves 305
Fig, 4.2 Magnetics ferrite material type F @ 25 °C core loss curves 306
Fig. 4.3 Magnetics ferrite material type R @ 100 °C core loss curves 307
Fig. 4.4 Magnetics ferrite material type K @ 80 °C core loss curves 308
Fig. 4..5 Magnetics ferrite material type W @25 "C core loss curves 309
Fig. 4.6 F material B-H loop @ 25°C and 100°C 311
Fig. 4.7 K material B-H loop @ 25 °C and 100°C 311
Fig. 4.8 P and R material B-H loop @ 25°C and 100°C 312
Fig. 4.9 W material B-H loop @ 25 °C and 100°C 312

Fig. 5.1 Micrometals iron powder material type -26 core loss curves 325
Fig. 5.2 Micrometals iron powder material type -8 core loss curves 326
Fig. 5.3 Micrometals iron powder material type -18 core loss curves 327
Fig. 5.4 Micrometals iron powder material type -52 core loss curves 328

List of Illustrations (cont.)

Fig. .5.5 Permeability versus dc bias..... 329
Fig. 5.6 Iron powder core type -08 B-H loop..... 331
Fig. 5.7 Iron powder core type -18 B-H loop..... 331
Fig. 5.8 Iron powder core type -26 B-H loop..... 332
Fig. 5.9 Iron powder core type -52 B-H loop..... 332

Fig. 6.1 Magnetics MPP powder core 125 perm loss curves..... 343
Fig. 6.2 Magnetics MPP powder core 60 perm loss curves..... 344
Fig. 6.3 Magnetics MPP powder core 26 perm loss curves..... 345
Fig. 6,4 Permeability versus dc bias..... 346
Fig. 6.5 Magnetics high flux powder core 125 perm loss curves..... 351
Fig. 6.6 Magnetics high flux powder core 60 perm loss curves..... 352
Fig. 6.7 Magnetics high flux powder core 26 perm loss curves..... 353
Fig. 6.8 Permeability versus dc bias..... 354
Fig. 6.9 Magnetics Kool Mμ powder core 60/125 perm loss curves..... 359
Fig. 6.1(I Permeability versus dc bias..... 360
Fig. 6.11 Molypermalloy material 125 permeability B-H loop..... 362
Fig. 6.12 High Flux material 125 permeability B-H loop..... 362
Fig. 6.13 Kool Mμ material 125 permeability B-H loop..... 363

Fig. 7.1 Magnetics Ni-Fe 0.5 mil Perm 80 core loss curves..... 373
Fig. 7.2 Magnetics Ni-Fe 1 mil Perm 80 core loss curves..... 374
Fig. 7.3 Magnetics Ni-Fe 2 mil Perm 80 core loss curves..... 375
Fig. 7.4 Magnetics 50 % Ni-Fe 1 mil Orthonol core loss curves..... 376
Fig. 7.5 Magnetics 50 % Ni-Fe 2 mil Orthonol core loss curves..... 377
Fig. 7.6 Magnetics 80 %Ni-Fe 1 mil Supermalloy core loss curves..... 378
Fig. 7.7 Magnetics 80 % Ni-Fe 2 mil Superalloy core loss curves..... 379
Fig. 7.8 Square Permalloy 80 DC hysteresis loop..... 381
Fig. 7.9 1.0 mil Permalloy 80 100kHz hysteresis loop..... 381
Fig. 7.10 0.5 mil Permalloy 80 100kHz hysteresis loop..... 382
Fig. 7.11 Metglas 2714 A 100kHz hysteresis loop..... 382

List of Illustrations (cont.)

Fig. 8.1 Allied Signal Inc. Metglas material type 2714A core loss curves 391
Fig. 8.2 Allied Signal Inc. Metglas material type 2605SC core loss curves 392
Fig. 8.3 Allied Signal Inc. Metglas material type 2605CTA core loss curves 393
Fig. 8.4 Metglas type 2605TCA DC hysteresis loop..... 395
Fig. 8.5 Metglas type 2605SC DC hysteresis loop..... 395
Fig. 8.6 Metglas type 2714A DC hysteresis loop..... 396
Fig. 8.7 Metglas type 2705MF DC hysteresis loop 396

Fig. 9.1 Common converter waveforms, with rms values 404
Fig. 9,2 Equivalent transformer circui 407
Fig. 9.3 Transistor voltage and current switching waveforms 408
Fig. 9.4 Low leakage low profile transformer 408
Fig. 9.5 Interleaving primary and secondary windings 409
Fig. 9.6 Capacitance turn to turn 410
Fig. 9.7 Comparing foldback winding A to a U winding in B 411
Fig. 9.8 Toroidal winding barriers 411
Fig. 9.9 Transformer with a primary and secondary shield 411
Fig. 9.10 Using the progressive winding technique 412
Fig. 9.11 Transformer winding with stray capacitance 412
Fig. 9.12 Half bridge converter design example 302 test circuit 415
Fig. 9.13 Full H bridge converter design example 303 test circuit..... 416
Fig. 9.14 Push-pull design converter example 301 test circuit..... 417
Fig. 9.15 Single ended forward converter design example 304 test circuit 418
Fig. 9.16 Buck converter design example 312 test circuit 419
Fig. 9.17 Inverted buck-boost converter design example 314 & 317 test circuit .. 420
Fig. 9.18 Boost converter design example 313 & 316 test circuit 421
Fig. 9.19 Isolated buck-boost design example 315 & 318 test circuit 422
Fig. 9.20 Forward converter mag-amp design example 308 test circuit 423

List of Tables

Table 4.1 Ferrite materials cross reference 285
Table 4.2 RM Core Data 289
Table 4.3 PQ Core Data 290
Table 4.4 RS Core Data 291
Table 4.5 DS Core Data 292
Table 4.6 EP Core Data 293
Table 4.7 EC Core Data 294
Table 4.8 ETD Core Data 295
Table 4.9 EPC Core Data 296
Table 4.10 PC Core Data 297
Table 4.11 EFD Core Data 298
Table 4.12 EE & EI Lam Size Core Data 299
Table 4.13 EE & EI Core Data 300
Table 4,14 Toroidal Core Data 302
Table 4.15 EE & EI Planar Core Data.... 304
Table 4.16 Ferrite Material characteristics 304

Table 5.1 Iron Powder Toroidal Core Data 315
Table 5.2 Iron Powder Material characteristics 304

Table 6.1 MPP Toroidal Powder Core Data 331
Table 6.2 High Flux Toroidal Powder Core Data 339
Table 6.3 Kool Mμ Toroidal Powder Core Data 347
Table 6,4 Nickel-Iron and Kool Mμ Powder Core Materials Characteristics 304

I"'able 7.1 Tape Toroidal Cores 0.5 mil 359
Table 7.2 Tape Toroidal Cores 1.0 mil 360
Table 7.3 Tape Toroidal Cores2.0mil 361
Table 7.4 Special Mag-Amp Toroidal Core Data 362
Table 7,5 Nickel-Iron and Amorophous Core Materials Characteristics 304

List of Tables (cont.)

Table 8.1 AmorphousTape Toroidal Cores 1.0 mil 375
Table 8.2 Gapped AmorphousTape Toroidal Cores 1.0 mil 376
Table 8.3 Amorphous Tape Core Materials Characteristics 304

Table 9.1 Wire Table 383
Table 9.2 Manufacturers Part Number 387

Chapter 1

Introduction

Introduction 2
Magnetic Core and its Power Handling Capability 2
Core Geometry 3
Transformers 3
Inductors 4
Transformer Considerations. 5
Apparent Power 5
Transformers used with PWM 6
inductor Considerations 8
inductor Related Factors 9
Powder Core Considerations 11
Window Utilization Factor 14
Regulation and Copper Loss 16
Transformer Efficiency and Regulation 18
Pulse Width Modulators (PWM) Integrated Circuit 19
Voltage Mode Control 19
Current ModeControl 20
References 22

Introduction

The conversion process in power electronics requires the use of transformers and inductors, components which frequently are the heaviest and bulkiest item in the conversion circuits. They also have a significant effect upon the overall performance and efficiency of the system. Accordingly, the design of such magnetic components has an important influence on overall system weight, power conversion efficiency and cost. Because of the interdependence and interaction of parameters, judicious tradeoffs are necessary to achieve design optimization.

Magnetic Core and its Power Handling Capability

For years manufacturers have assigned numeric codes to their cores; these codes represent the power-handling ability. This method assigns to each core a number which is the product of its window area W_a and core cross section area, A_c and is called Area Product, A_p.

$$A_p = W_a A_c \ [\mathrm{cm}^4] \tag{1.1}$$

These numbers are used by core suppliers to summarize dimensional and electrical properties in their catalogs. They are available for laminations, C.-cores, ferrite cores, powder cores and toroidal tape-wound cores. A typical EE ferrite is shown in Figure 1.1.

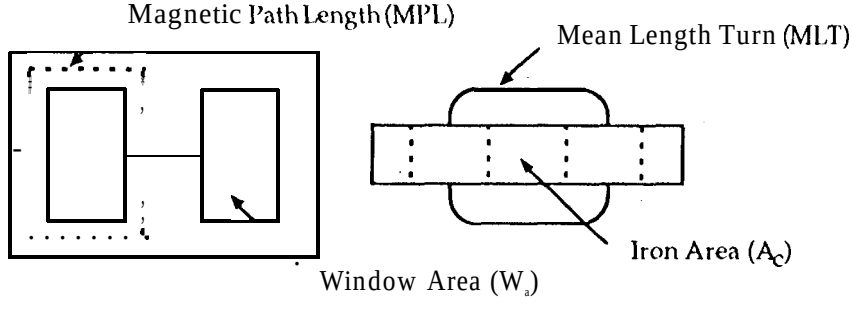

Figure 1.1 Typical EE ferrite core.

There is another equation that relates to the power handling capability of the core and that is the core geometry Kg. The core geometry, K_g, is also related to regulation or copper loss P_{cu}. Every core has its own inherent Kg. The core geometry Kg, is relatively new and magnetic cm-e manufacturers are beginning to list this coefficient.

$$K_g = \frac{W_a A_c^2 K_u}{MLT} \quad [\mathrm{cm}^5] \tag{1.2}$$

This equation is similar to area product equation except by two additional terms window utilization, Ku, and the mean length turn, MLT. Window utilization, K_u, deals with a factor on how much copper is being placed in the window. Mean length turn, MLT, is the average turn of copper wire. They both have to do with regulation. Core geometry, K_g, is treated extensively throughout this book. Additional information is also presented for the convenience of the designer. Much of the material is in tabular form to assist the designer in making the tradeoffs best suited for his or her particular application in a minimum amount of time,

This relationship can now be used as a new tool to simplify and standardize the process of transformer and inductor design, The core geometry, K_g, will make it possible to design magnetic components of lighter weight and smaller volume or to optimize efficiency without going through a cut and try design procedure. While developed specifically for aerospace applications, the information has wider utility and can be used for the design of high frequency, small size, magnetics for appliances and computers as well.

Core Geometry Kg

Transformers

Although most transformers are designed for a given temperature rise, they can also be designed for a given regulation. The regulation and power-handling ability of a core are related to two constants:

$$Kg = \frac{P_t}{2K_e\alpha} \quad [cm^3] \tag{1.3}$$

$$\alpha = \frac{P_t}{2K_gK_e} \quad [\%] \tag{1.4}$$

The constant, K_g, is determined by the core geometry which is related by the following equation:

$$K_g = \frac{W_aA_c^2K_u}{MLT} \quad [cm^3] \tag{1.5}$$

The constant, K_e, is determined by the magnetic and electric operating conditions which is

related by the following equation:

$$K_e = 0.145 K_f^2 f^2 B_m^2 10^{-4} \tag{1.6}$$

where

$$\begin{aligned} K_f &= \text{waveform coefficient} \\ K_f &= 4.0, \text{ square wave} \\ K_f &= 4.44, \text{ sine wave} \end{aligned} \tag{1.7}$$

From the above, it can be seen that factors such as flux density, frequency of operation, and waveform coefficient all have an influence on the transformer size.

Inductors

Inductors, like transformers, are designed for a given temperature rise. They can also be designed for a given regulation. The regulation and energy handling ability of a core are related to two constants:

$$K_g = \frac{(Energy)}{K_e \alpha} [\text{cm}^5] \tag{1.8}$$

$$\alpha = \frac{(Energy)}{K_g K_e} \quad [\%] \tag{1.9}$$

The constant, K_g, is determined by the core geometry which is related by the following equation:

$$K_g = \frac{W_a A_c^2 K_u}{MLT} \quad [\text{cm}^5] \tag{1.10}$$

The constant, K_e, is determined by the magnetic and electric operating conditions and is related by the following equation:

$$K_e = 0.145 P_o B_{max}^2 10^{-4} \tag{1.11}$$

where

$$P_o = \text{output power [watts]} \tag{1.12}$$

$$B_{max} = B_{dc} + \frac{B_{ac}}{2} \quad \text{[tesla]} \tag{1.13}$$

From the above, it can be seen that flux density is the predominant factor governing size.

Transformer Considerations

The designer is faced with a set of constraints which must be observed in the design of any transformer. One of these is the output power, P_o, (operating voltage multiplied by maximum current demand). The secondary winding must be capable of delivering power to the load within specified regulation limits, Another relates to minimum efficiency of operation which is dependent upon the maximum power loss which can be allowed in the transformer. Still another defines the maximum permissible temperature rise for the transformer when used in a specified temperature environment.

Other constraints relate to the volume occupied by the transformer, particularly in aerospace applications, since weight minimization is an important goal in the design of space flight electronics. Cost effectiveness is always an important consideration.

Apparent Power

Output power, P_o, is of greatest interest to the user. To the transformer designer, it is the apparent power, P_t, (associated with the geometry of the transformer) that is of greater importance. Assume, for the sake of simplicity, the core of an isolation transformer has but two windings, namely a primary and a secondary winding in the window area, W_a. Also assume that the window area, W_a, is divided in proportion to the power handling capability of the windings using equal current density. The primary winding handles, P_{in}, and the secondary handles, P_o, to the load. Since the power transformer has to be designed to accommodate both the primary, P_{in}, and P_o, then.

$$P_t = P_{in} + P_o \quad \text{[watts]} \tag{1.14}$$

$$P_{in} = \frac{P_o}{\eta} \quad \text{[watts]} \tag{1.15}$$

$$P_t = \frac{P_o}{\eta} + P_o \quad \text{[watts]} \tag{1.16}$$

$$P_t = P_o \left(\frac{1}{\eta} + 1\right) \quad \text{[watts]} \tag{1,17}$$

Transformers used with PWM

The heart of the power supply is really the high frequency converter. It is here that the input voltage is transformed up or down to the correct output level. The output is then rectified and filtered. The task of regulating the output voltage is left to the control circuit which closes the loop from the output to the inverter. In general most pulse wid th modulators (PWM) operate at a fixed frequency internally and utilize pulse width modulation techniques to implement the desired regulation. Basically, the on-time of the square wave drive to the inverter is controlled by the output voltage. As the load is removed or input voltage increases, a slight rise in the output voltage will signal the control circuit to deliver narrower pulses to the inverter, and conversely, as the load is increased or input voltage decreases, wider pulseswill be fed to the inverter.

The transformer provides electrical isolation between line and load. The output of the transformer is rectified and provides a variable pulse width square wave to a simple averaging LC filter. The first order approximation of the output voltage is shown in the following equation. Regulation is accomplished by simply varying the D (duty-ratio).

$$V_{out} = V_{in}\left(\frac{N_s}{N_p}\right)D \quad \text{[volts]} \tag{1.18}$$

$$D = \frac{t_{on}}{T} \tag{1,19}$$

The designer must be concerned with the apparent power handling capability, P_t, of the transformer core and windings. P_t may vary depending upon the type of circuit and the duty ratio in which the transformer is used. If the current in the rectifier transformer becomes interrupted, its effective rms value changes. Transformer size, thus, is not only determined by the load demand but, also, by application because of the different copper losses incurred due to current waveform. The rms current I_{rms} is the peak current times the square root duty ratio.

$$I_{rms} = I_{pk}\sqrt{D_{max}} \tag{1.20}$$

I et's review the three basic transformer configurations and compare the power handling capabilities required for each winding for the (a) full-wave bridge circuit of Figure 1.2, (b) full-wave center-tapped secondary circuit of Figure 1.3, and (c) push-pull center-tapped full-wave circuit in Figure 1.4,

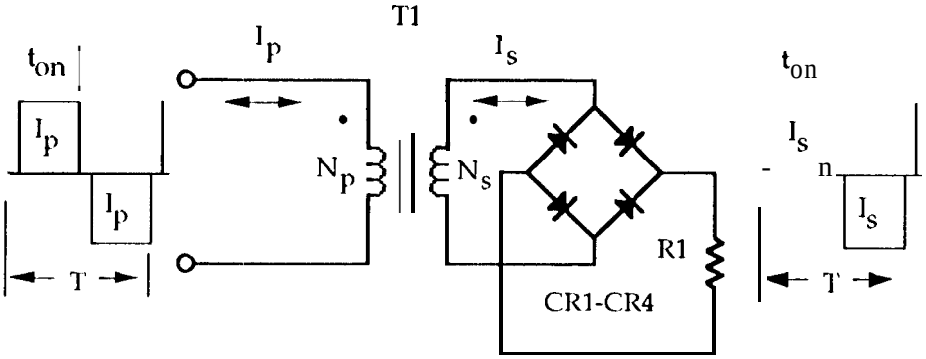

Figure 1.2 Full-wave bridge circuit .

The total apparent power, I'ᵢ, for the circuit shown in Figure 1.2 is shown in the following equation:

$$P, = P. \frac{1}{[\eta} + 1_{1} \quad \text{[watts]} \tag{1.21}$$

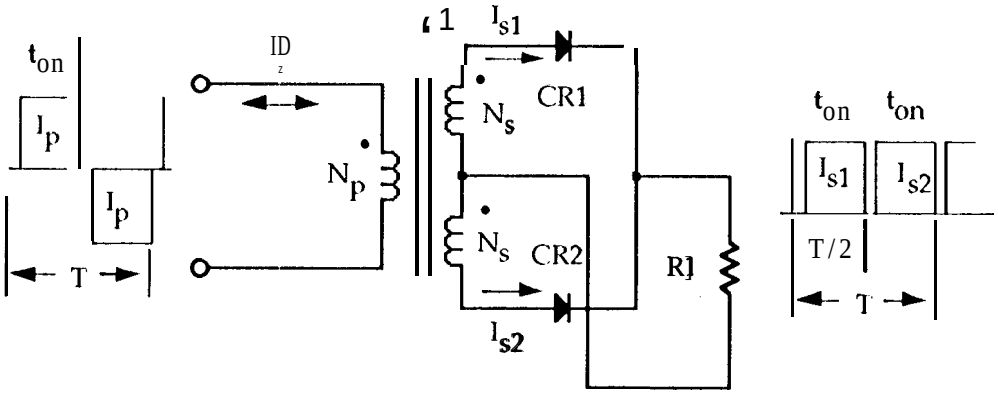

Figure 1.3 Full-wave, center tapped circuit.

The total power, P_t, for the circuit shown in Figure 1.3 increased due to the interrupted current flowing in the secondary winding. This is shown in the following equation:

$$P_t = P_o\left(\frac{1}{\eta} + \sqrt{2}\right) \text{ [watts]} \tag{1.22}$$

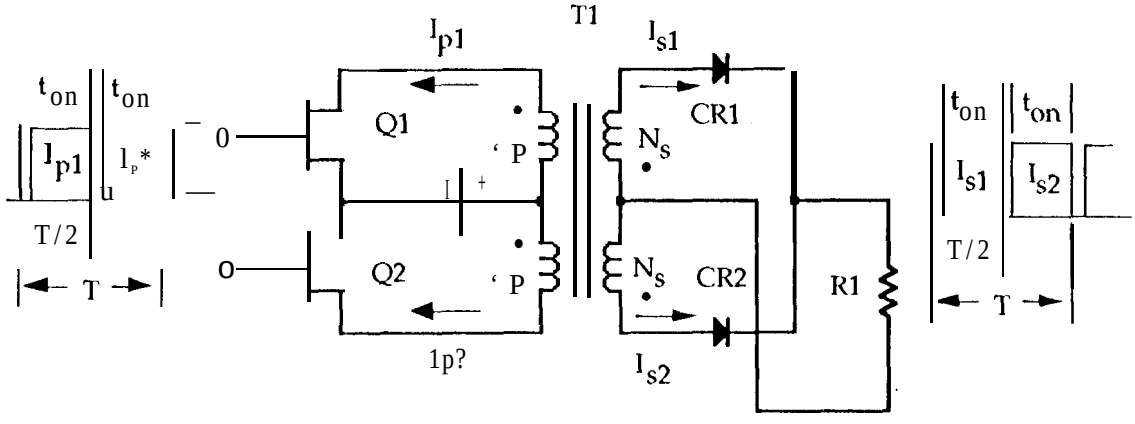

Figure 1.4 Push-pull, full-wave, center-tapped circuit.

The total power, P_t, for the circuit shown in Figure 1.4, increases over the circuit shown in Figure 1.2. This is due to using center tapped circuits where the current flowing in both the primary and secondary windings is interrupted, This circuit is typical of a dc to dc converter The apparent power is shown in the following equation:

$$P_t = P_o\left(\frac{\sqrt{2}}{\eta} + \sqrt{2}\right) \text{ [watts]} \tag{1.23}$$

Inductor Considerations

The designer is faced with a set of constraints which must be observed in the design of any inductor, One of these is copper loss; the winding must be capable of delivering current to the load within specified regulation limits. Another relates to minimum efficiency of operation which is dependent upon the maximum power loss that can be allowed in the inductor. Still another defines the maximum permissible temperature rise for the inductor when used in a specified temperature environment. The gapped inductor has three loss components: (a) copper loss P_{cu}, (b) core loss P_{fe} and (c) gap loss Pg. Maximum efficiency is reached in an inductor and

in a transformer when the copper loss I'_{cU} and the iron loss P_{fe} are equal, but only when the core gap is zero. Gap loss does not occur in the air gap itself. This loss is caused by magnetic flux fringing around the gap and recentering the core in a direction of high loss. As the air gap increases, the fringing flux increases more and more, and some of the fringing flux strikes the core perpendicular to the tape or lamination and sets up eddy currents which cause additional loss. Fringing flux can also generate additional losses by inducing eddy currents in the copper windings especially if foil is being used. When there is a gap in a magnetic core, transformer or inductor, care must be taken with any metallic material in close proximity of the gap. Designing with a moly - permalloy powder core, the gap loss is minimized because the powder is insulated with a ceramic material which provides a uniformly distributed air gap. With ferrites, the gap loss is minimized because ferrite materials have such high resistivity. Other constraints relate to the volume and weight occupied by the inductor. Weight minimization is an important goal in the design of space flight electronics. Also cost effectiveness is always a vital consideration.

Inductor Related Factors

The design of a linear reactor depends upon four related factors:

1. Desired inductance
2. Direct current
3. Alternating current Al
4. Power 10ss and temperature rise

With these requirements established, the designer must determine the maximum values for B_{dc} and for II_{ac} which will not produce magnetic saturation, then make tradeoffs which will yield the highest inductance for a given volume. The chosen core material dictates the maximum flux density which can be tolerated for a given design.

$$B_{Max} = \frac{0.4\pi N^2 \left(I_{dc} + \frac{\bar{\Lambda} I}{2}\right)}{l_g} 1 \quad 0^{-4} \text{ [tesla]} \qquad (1,24)$$

The inductance of an iron-core inductor carrying ctc and having an air gap maybe expressed as:

$$L = \frac{0.4\pi \ N^2 A_c}{l_g + \frac{l_m}{\mu_r}} 10^{-8} \quad \text{[henrys]} \qquad (1.25)$$

Inductance is dependent on the effective length of the magnetic path which is the sum of the air gap length l_g and the ratio of the core mean length to relative permeability l_m/μ_r. When the core air gap l_g is large compared with the ratio of the core mean length to relative permeability, l_m/μ_r, variations in μ_r do not substantially effect the total effective magnetic path length or the inductance, The inductance equation then reduces to:

$$L \cong \frac{0.4\pi N^2 A_c}{l_g} 10^{-8} \quad \text{[henrys]} \tag{1.26}$$

Final determination of the air gap size requires consideration of the effect of fringing flux which is a function of gap dimension, the shape of the pole faces, and the shape, size and location of the winding. Its net effect is to shorten the air gap. Fringing flux decreases the total reluctance of the magnetic path and therefore increases the inductance by a factor F to a value greater than that calculated from equation (1 .25). Fringing flux is a larger percentage of the total for larger gaps. The fringing flux factor is:

$$F = \left(1 + \frac{l_g}{\sqrt{A_c}} \ln \frac{2G}{l_g}\right) \tag{1.27}$$

Inductance L computed in the above equation does not include the effect of fringing flux. The value of inductance L' corrected for fringing flux is:

$$L' = \frac{0.4\pi N^2 A_c 1'}{l_g + \frac{l_m}{\mu_r}} 10^{-8} \quad \text{[henrys]} \tag{1.28}$$

Distribution of fringing flux is also affected by core geometry, the proximity of coil turns to the core, and whether there are turns on both legs.

The fringing flux is around the gap and re-enters the core in a direction of high loss as shown in Figure 1.5. Accurate prediction of gap loss P_g created by fringing flux is very difficult at best to calculate, This area around the gap is very sensitive to metal objects such as clamps, brackets and banding materials. The sensitivity is dependent on the magnetomotive force, gap dimensions and the operating frequency. If a metal bracket or banding material is used to secure the core and it passes over the gap, two things could happen: (1) If the material is ferromagnetic and placed over the gap or is in proximity so it conducts the magnetic flux, this is called "shorting the gap". Shorting the gap is the same as reducing the gap dimension and producing a higher inductance than designed. (2) If the material is metallic (such as copper,

phosphor-bronze) but not ferromagnetic, it will not short the gap or change the inductance. In both cases, if the fringing flux is strong enough, it will induce eddy currents that will cause localized heating, This is the same as the principle called induction heating.

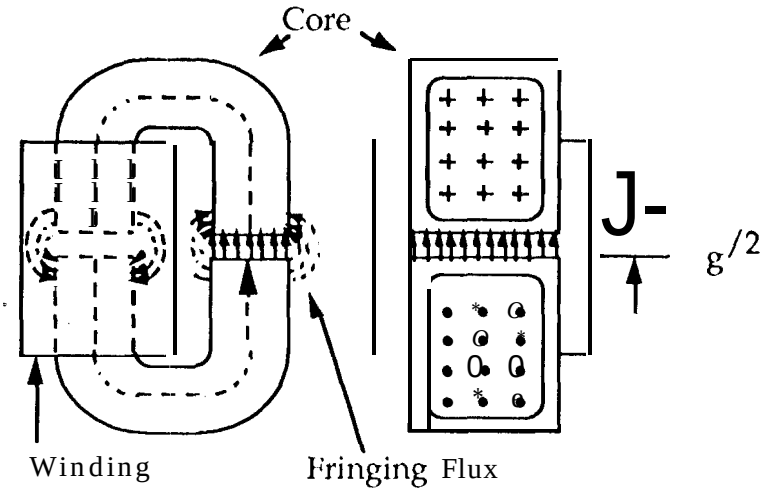

Figure 1.5 Fringing flux around the gap of an inductor designed with a C core.

Effective permeability may be calculated from the following expression:

$$\mu_{\Delta} = \frac{\mu_m}{1 + \left(\frac{l_g}{l_m}\right)\mu_m} \qquad (1.29)$$

After establishing the required inductance and the dc bias current which will be encountered, dimensions can be determined. This requires consideration of the energy handling capability which is controlled by the size of the inductor, The energy handling capability of a core is:

$$Energy = + - \quad [\text{watt - see}] \qquad (1.30$$

Powder Core Considerations

The design of an inductor also frequently involves considerations of the effect of its magnetic field on other devices near where it is placed. This is especially true in the design of high-current inductors for converters and switching regulators used in spacecraft, which may also employ sensitive magnetic field detectors.

For this type of design problem, it is frequently imperative that a toroidal core be used. The magnetic flux in a molypermalloy toroid can be contained inside the core more readily than in a lamination or C type core. A toroidal winding covers the core along the whole magnetic path length. This condition is true as long as the winding covers the entire core.

The author has developed a simplified method of designing optimum dc carrying inductors with molypermalloy powder cores. This method allows the correct core permeability to be determined without relying on trial and error,

With these requirements established, the designer must determine the maximum values for Bd_c and for B_{ac} which will not produce magnetic saturation, then make tradeoffs which will yield the highest inductance for a given volume. The core permeability chosen dictates the maximum dc flux density which can be tolerated for a given design.

If an inductance is to be constant with increasing direct current, there must be a negligible drop in inductance over the operating current range. The maximum H, then, is an indication of a core's capability in terms of ampere-turns and mean magnetic path length l_m.

$$H = \frac{.4\pi NI}{l_m} \quad \text{[oersteds]} \tag{1.31}$$

where

$$NI = .8\, Hl_m \quad \text{[amp - turn]} \tag{1'.32}$$

Inductance decreases with increasing flux density and magnetizing force for various materials of different values of permeability $\mu\Delta$. The selection of the correct permeability for a given design is made after solving for the energy handling capability:

$$\mu_\Delta = \frac{B_m l_m}{.4\pi W_a J K_u} 10^4 \tag{1 .33}$$

It should be remembered that maximum flux density depends upon B_{dc} + AB in the manner shown in Figure 1.6.

$$B_{max} = B_{dc} - t\,\frac{\Delta B}{2} \quad \text{[tesla]} \tag{1 .34}$$

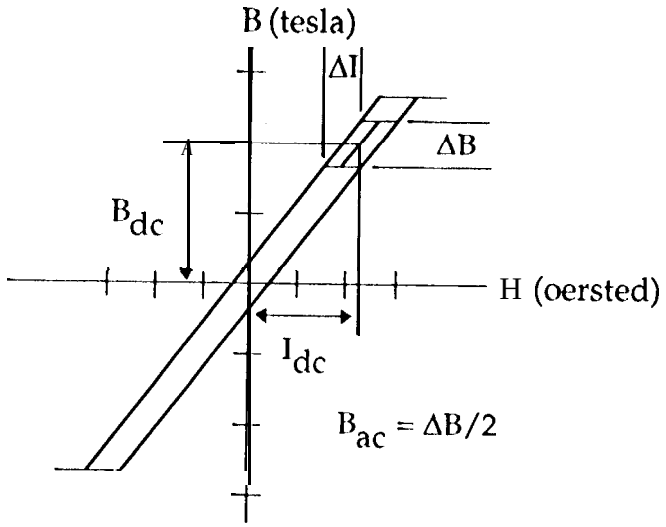

Figure 1.6 Flux density versus Id_c + Al.

Molypermalloy powder cores operating with a dc bias of 0.3 tesla have only about 80% of their original inductance. inductance will rapidly falloff at higher flux densities. The flux density for the initial design for molypermalloy powder cores should be limited to 0.3 tesla maximum fOr B_{dc} p]US ΔB/2.

Window Utilization Factor Ku

The window utilization factor is the ratio of the copper area to total window area of the transformer or inductor, Window utilization is influenced by 4 different factors: (1) wire insulation, (2) wire lay (fill factor), (3) bobbin area (or, when using a toroid, the clearance hole for passage of the shuttle), and (4) insulation required for multilayer windings or between wind ings. In the design of high-current or 1ow-cu rrent t ransformers, the ratio of conductor area over total wire area can have a range from 0. 941 for a number 10 AWG to 0.673 for a number 40 AWG, depending on the wire size. The wire lay or fill factor can vary from 0.7 to 0.55, depending on the winding technique, The winding technique can be defined on paper but will vary from one winder to another. The amount and the type of insulation are dependent on the voltage.

The fraction Ku of the available core window space which will be occupied by the winding (copper) is calculated from area S_1, S2, S_3, and S4:

$$Ku = S_1 S_2 S_3 S_4 \tag{1.35}$$

When designing low-current transformers, it is advisable to reevaluate S_1 because of the increased amount of insulation see Figure 1,7.

$$S_1 = \frac{A_{w(\text{bare})}}{A_{w(\text{ins})}} \tag{1 .36}$$

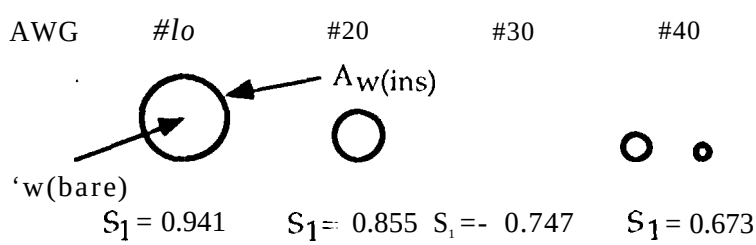

Figure 1.7 Ratio of copper area versus wire area (not to scale),

S_2 is the fill factor for the usable window area. It can be shown that for circular cross-section wire wound on a flat form the ratio of wire area to the area required for the turns can never be greater than 0.91. In practice, the actual maximum value is dependent upon the tightness of winding, variations in insulation thickness, and wire lay.

Consequently, the fill factor is always less than the theoretical maximum. As a typical working value for copper wire with a heavy synthetic film insulation, a ratio of 0.60 may be safely used see Figure 1.8.

$$S_2 = \text{fill factor} = 0.6 \qquad (1.37)$$

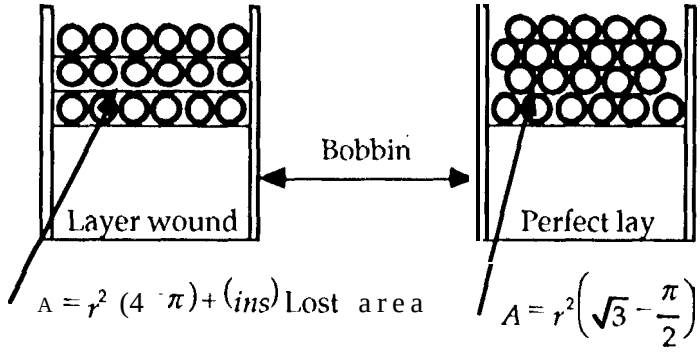

Figure 1.8 Winding configuration (fill factor).

S_3 defines how much of the available window space may actually be used for the winding. The winding area available to the designer depends on the bobbin configuration. A single bobbin design offers an effective area W_a between 0.835 to 0.929 while a two bobbin configuration offers an effective area W_a between 0.687 to 0.872. A good value to use for both configurations is 0.75.

$$S_3 = \frac{W_{a(bobbin)}}{W_{a(core)}} = \frac{0.994}{1.495} = 0.665 \qquad (1.38)$$

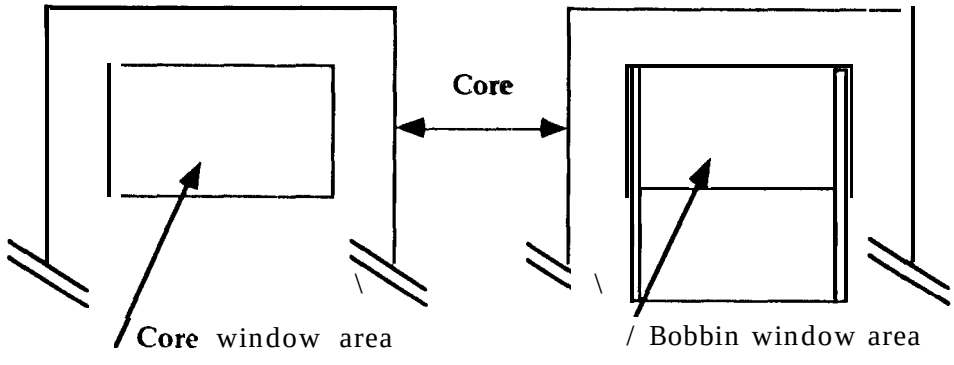

Figure 1.9 Available winding area in a PQ-43220.

Its is important to remember that when designing magnetic components using cut ferrites such as RM, PQ, ETD, etc., it is wise to reevaluate the window utilization factor K_u. The bobbins are

designed to take this shrinkage into account so one bobbin fits all. This will impact the available window space and S_3 will have to be re-evaluated downwards to about 0.6; see Figure 1.9.

S4 defines how much of the usable window space is actually being used for insulation, If the transformer has multiple secondaries having significant amounts of insulation, S4 should be reduced by 2.5% for each additional secondary winding because of the added space occupied by insulation, in addition to a poorer space factor,

A typical value for the copper fraction in the window area is about 0.40. For example, for AWG 20 wire, S_1 x S2 x S_3 x S4 = 0.855x 0.60x 0.75x 1.0= 0.385, which is very close to 0.4.

Regulation and Copper Loss

Transformer size is usually determined either by temperature rise limit or by allowable voltage regulation, assuming that size and weight are to be minimized. Regulation is denoted by a and is expressed in percent. A circuit diagram of a simple transformer with one secondary is shown Figure 1.10. This simple diagram will show how regulation and copper loss are interrelated.

This assumes that distributed capacitance in the secondary can be neglected because the frequency and the secondary voltage are not excessively high. Also, the winding geometry is designed to limit the leakage inductance to a level low enough to be neglected under most operating conditions.

Transformer regulation can now reexpressed as

$$\alpha = \frac{V_S(NL) - V_S(FL)}{V_S(FL)} 100 \quad [\%] \tag{1.39}$$

in which V_S (NL) is the no load voltage and V_S (FL) is the full load voltage,

For the sake of simplicity, assume that the transformer in Figure 1.10 is an isolation transformer with a 1:1 turns ratio, and the core impedance R_e is infinite. Then,

$$1_p = 1, \text{ and } \quad R_p = R_s \tag{1.40}$$

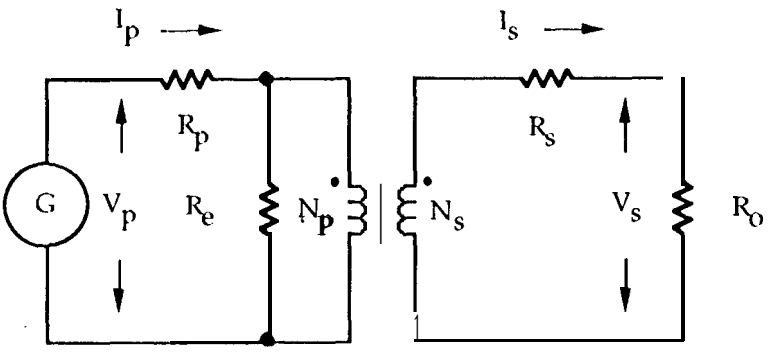

$N_s/N_p = 1$

Figure 1.10 Simple transformer equivalent circuit.

With equal window area W_a allocated for the primary and secondary windings and using the same current density J,

$$\Delta V_p = I_p R_p = \Delta V_s = I_s R_s \tag{1.41}$$

Regulation is then

$$\alpha = \frac{\Delta V_p}{V_p} 100 + \frac{\Delta V_s}{V_s} 100 \quad [\%] \tag{1.42}$$

Multiplying the equation by the current 1,

$$\alpha = \left(\frac{\Delta V_p I_p}{V_p I_p}\right) 100 + \left(\frac{\Delta V_s I_s}{V_s I_s}\right) 100 \quad [\%] \tag{1.43}$$

Primary copper 10ss is

$$P_{pcu} = \Delta V_p I_p \quad [\text{watts}] \tag{1.44}$$

Secondary copper loss is

$$P_{scu} = \Delta V_s I_s \quad [\text{watts}] \tag{1.45}$$

Total copper loss is

$$P_{cu} = P_{pcu} + P_{scu} \, [\text{watts}] \tag{1.46}$$

Then the regulation equation can be rewritten to:

$$\alpha = \frac{P_{cu}}{P_s} 100 \ [\%] \tag{1.47}$$

Regulation can be expressed as the power loss in the copper, A transformer with an output power of 100 watts and regulation of 2% will have 2 watt loss total in the copper,

$$P_{cu} = \frac{P_s \alpha}{100} \ [\text{watts}] \tag{1.48}$$

$$P_{cu} = \frac{(100)(2)}{100} \ [\text{watts}] \tag{1.49}$$

$$P_{cu} = 2 \ [\text{watts}] \tag{1.50}$$

Transformer Efficiency and Regulation

Transformer efficiency, regulation, and temperature rise are all interrelated, Not all of the input power to the transformer is delivered to the load. The difference between the input power and output power is converted into heat. This power loss can be broken down into two components: core loss and copper loss. The core loss is a fixed loss, and the copper loss is a variable loss related to the current demand of the load. Copper loss increases by the square of the current and is termed quadratic loss. Maximum efficiency is achieved when the fixed loss is equal to the quadratic loss at rated load. Transformer regulation is copper loss I'_{cu} divided by the output power I'_o.

Transformers normally dissipate heat from the surface of the component, Transformers today are designed for higher and higher frequencies. This reduces the size and mass of the magnetic components and the filter components which are quite large themselves. Transformers designed for low frequency are much larger and consequentially have more surface area to dissipate the heat resulting in a lower watt density. This results in a lower temperature rise. Transformers designed to have a regulation or copper loss of 10% at 60 Hz for a given temperature rise will require a regulation of at least 1% at 50 kHz for the same temperature rise, This is because transformers designed to handle the same power at a higher frequency will be smaller with less surface area. Transformers large or small that have the same temperature rise will have the same watt density.

Pulse Width Modulators (PWM) Integrated Circuits

Significant technology changes have been made possible since the introduction of the power MOSFET and Pulse Width Modulator (PWM) control integrated circuits. Higher switching frequencies have been made possible by the power MOSFET transistor. This is due to the inherent switching speed of the power MOSFET which is in the order of 10 to 100 nanoseconds. Implementing the switching power supply has become significantly easier with the introduction of the I'WM integrated circuit. The pulse width modulators have brought about ease of control, simplified drive and circuit stability, There are basically two types of pulse width modulators used in switching power supplies: (a) voltage mode control and (b) current mode control,

Voltage Mode Control

The conventional voltage mode control approach is shown in Figure 1.11,

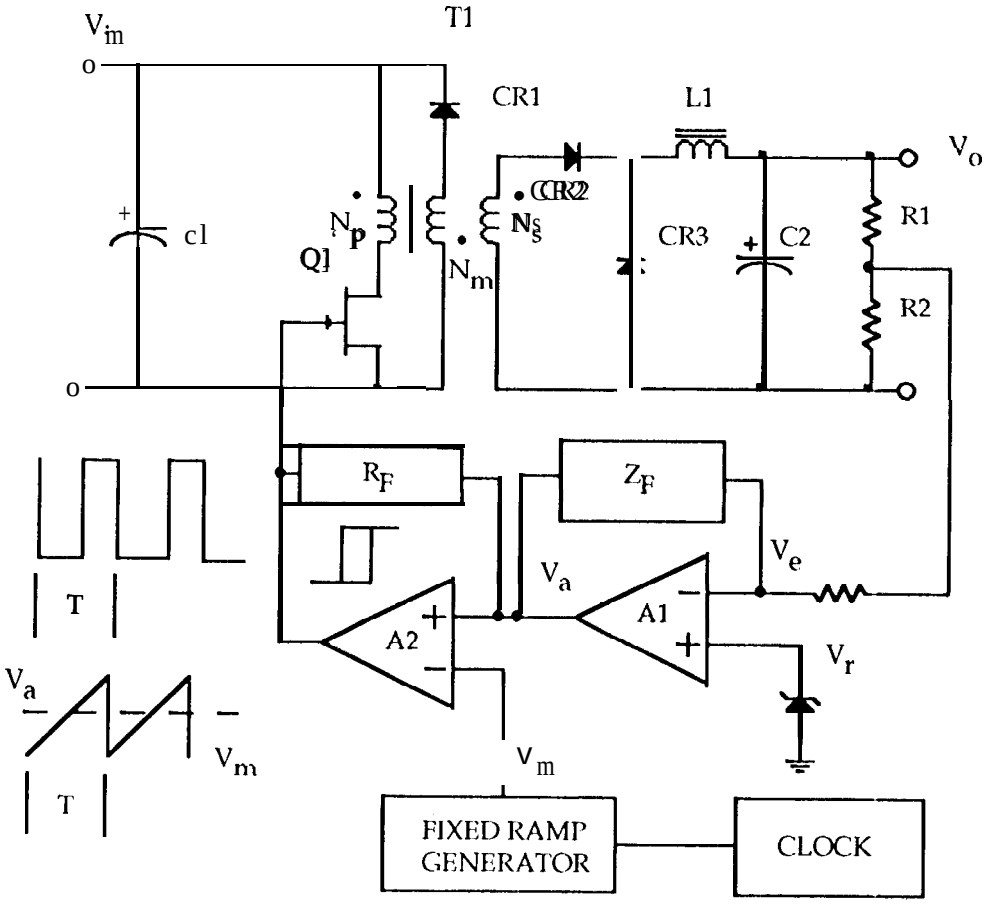

Figure 1,11 Implementing a voltage mode pulse width modulator (PWM).

In the voltage mode, the small differential voltage between the voltage divider V_e and reference voltage V_r is being amplified by the high dc gain of the error amplifier Al, resulting in an error voltage V_a. This voltage is then compared to a clocked sawtooth with a constant peak to peak magnitude V_m The output of the comparator A2 stage is now a fixed frequency, variable duty cycle square wave that controls the switching transistor Q1 according to the variations in the magnitude of the error voltage V_e. This regulator type, where a single control loop system is incorporated and only the output voltage is being monitored and regulated, is called a voltage-mode-controlled regulator.

Current Mode Control

The current mode control approach is shown in Figure 1.12.

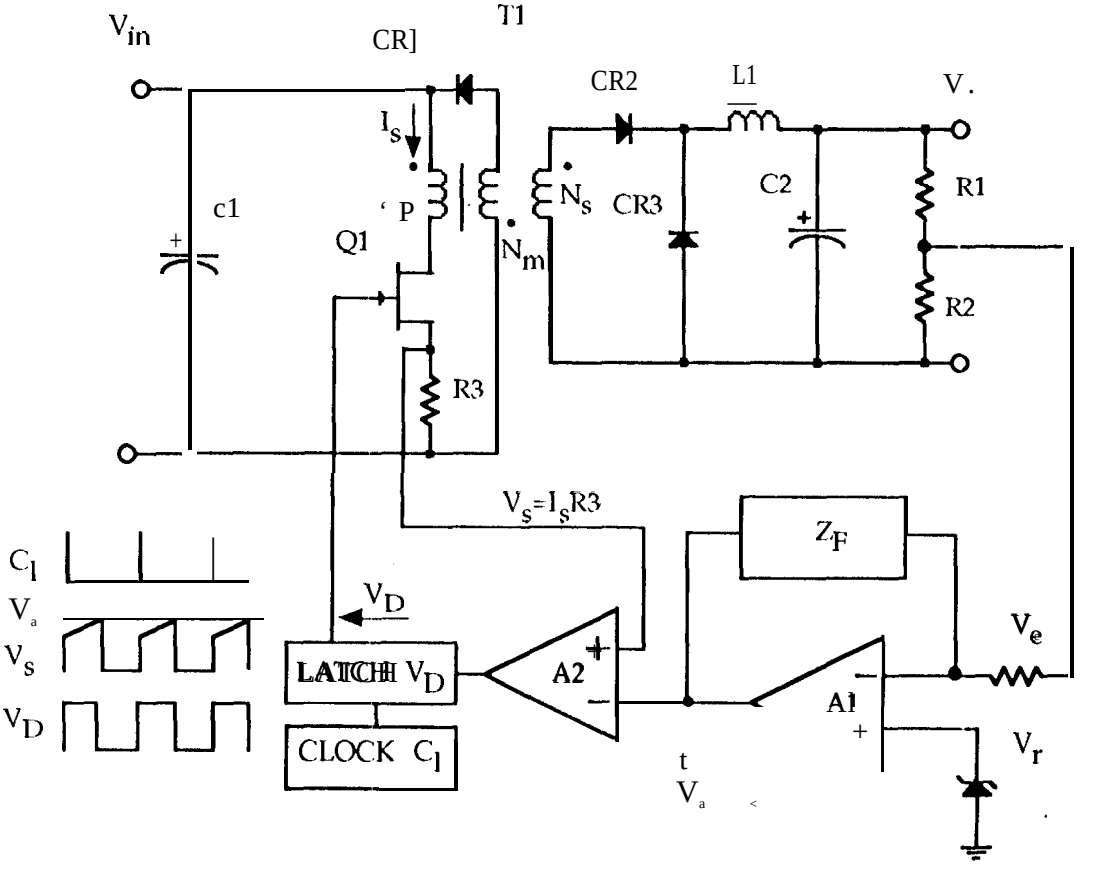

Figure 1.12 implementing a current mode pulse width modulator (PWM).

The current mode control scheme consists of two loops; a (1) current loop which detects the switching current I_S through R3 inside (2) the voltage loop regulating the output voltage, and a voltage control loop as described earlier.

The operation of the current mode controller is as follows. A clock signal running at a fixed frequency sets the output of the latched circuitry to go high, turning on switching transistor Q1. Once the voltage across the current sense resistor R3 reaches a threshold set by the error signal V_a, the output of the comparator A2 switches low. This resets the output of the latch to zero and keeps it low until the next clock pulse.

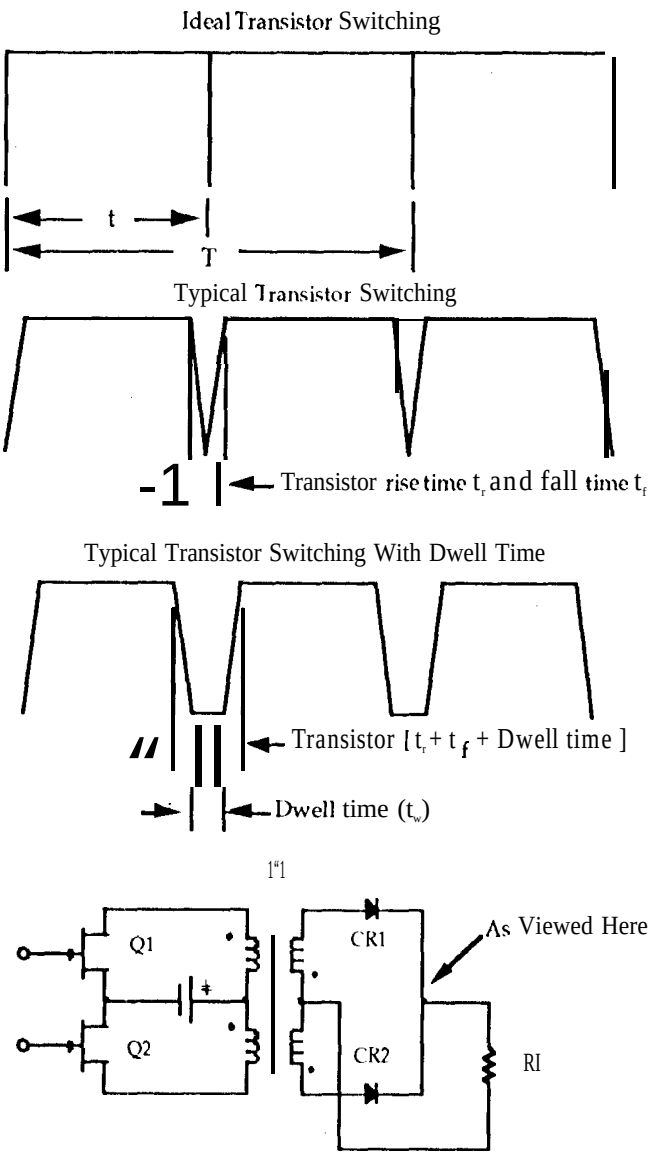

Figure 1.13 Transistor switching time and dwell time.

Power converters can now achieve pulse-by-pulse current-limiting by using this method. This method of current mode control is especially important whenever push-pull center tapped topologies are used, where switching transistors might be subjected to any imbalance, that would cause a net dc current in the transformer. This dc current could cause the transformer to saturate and could result in over stress and premature failure of the switching transistors.

One of the niceties of these new pulse width modulators (PWM) chips is their numerous special control features: (1) 5 volt reference capable of 10 to 20 ma for external circuitry, (2) shut down and reset for turning the power converters on and off, (3) an under-voltage lockout or shut-down until the input voltage is at a predetermined level to insure proper operation, (4) a programmable soft-start to hold the inrush current to a minimum, (5) a programmable dwell time t_w for the switching transistors. [Which insures that there will be no overlap switching of the power transistors thus minimizing stress and EM]]. Dwell time is similar to the switching time (see Figure 1.13) as its subtracts from the average input voltage. As designs go higher in frequency the switching time, rise time t_r, fall time t_f and the dwell time tw have a significant impact on the output voltage. Care should be taken on how much the dwell time changes with temperature from device to device. If we assume the rise time t_r and fall time tf to be equal ($t_r = t_f$), then the total dwell time tt_w is:

$$t_{tw} = t_r + t_f + t_w \, [\mu\text{sec}] \tag{1.51}$$

The total equivalent dwell time, tt_w, is given as follows:

$$t_{tw} = \left(\frac{t_r + t_f}{2}\right) + t_w \, [\mu\text{sec}] \tag{1.52}$$

Chapter 2

Magnetics in Switching Circuits

Power Transformers in Switching Circuits

1. introduction 24
2. Push Pull Switching Converter 24
3. HalfBridgeS witchingConverter. 26
4. Full or H Bridge Switching Converter 28
5. Single Ended Forward Switching Converter 31
6. Two Transistor Forward Switching Converter 33
7. Current Fed Weinberg SwitchingConverter 34
8. Mag-Amps for Switching Converters . . . .'. 35
9. Single Forward Mag-Amp Switching Converter 37
10. Push-Pull Mag-Amp Switching Converter 38

Energy Storage Inductors in Switching Circuits

11. Introduction 40
12. Energy Transfer 40
13. The Continuous and Discontinuous Boundary 41
12. Buck Flyback Regulator 42
13. Boost Flyback Regulator 43
14. Buck-Boost Inverting Flyback Regulator 44
15. Isolated Buck-Boost Flyback Regulator. 46
16. Coupled Output Filter Inductor 47
17. input Filter Inductor 49
18. Output Filter Inductor 50

References 52

Magnetics in Switching Circuits

Introduction

The usage of switched mode power supplies (SMPS) has experienced a significant growth. The proper design of the magnetic components used in these power supplies takes on added importance because of the design tradeoffs the engineer must make.

The engineer has a variety of converter circuits available to convert the dc input voltage to the required dc output voltage. The type circuit he chooses will be the result of a trade-off study associated with the application for the converter and the characteristics of the various converter circuits. These characteristics influence the design sa to how easy or difficult it will be for a particular application.

Push-Pull Converter

The push-pull switching converter is considered a transformer-isolated variation of the buck converter, and probably the most widely used type of power conversion circuit (Figure 2.1). In this design, the primary of the transformer can be connected in several ways: push-pull, half bridge or full bridge depending upon how one drives the transformer. The push-pull converter is, in fact, an arrangement of two forward converters on a single core. Push-pull converters reduce output voltage ripple by doubling the ripple current frequency to the output filter. A further advantage of push-pull operation is that magnetization is applied to the transformer core in both directions. The push-pull converter transformer, when subjected to small amounts of dc imbalance, can lead to core saturation. The voltage and current wave forms are shown in Figure 2.2.

The Transformer apparent power is:

Secondary P_{ts} with a center tap is

$$P_{ts} = (V_o + V_d)I_o\sqrt{2} \text{ [watts]} \tag{2.1}$$

Secondary P_{ts} without a center tap is:

$$P_{ts} = (V_o + V_d)I_o \text{ [watts]} \tag{2.2}$$

Total secondary P_{ts} is:

$$P_{ts} = \#1\,P_{ts01} + \#2\,P_{ts02} + \#n\,P_{ts} \ldots\ldots\ldots \tag{2.3}$$

Primary P_{tp} is:

$$P_{tp} = \frac{P_{ts}\sqrt{2}}{\eta} \quad \text{[watts]} \tag{2.4}$$

Total Transformer VA or Apparent Power P_t is:

$$P_t = P_{tp} + P_{ts} \quad \text{[watts]} \tag{2.5}$$

The following is the d.c. transfer function for the push-pull converter,

$$\frac{V_o}{V_{in}} \approx \frac{N_s}{N_p} \cdot \frac{2t_{on}}{T} = \frac{I_{in}}{I_o} \tag{2.6}$$

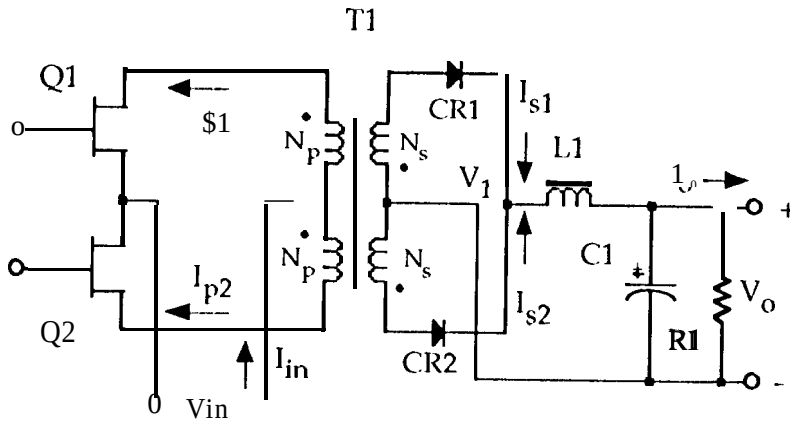

Figure 2,1 Push-pull converter.

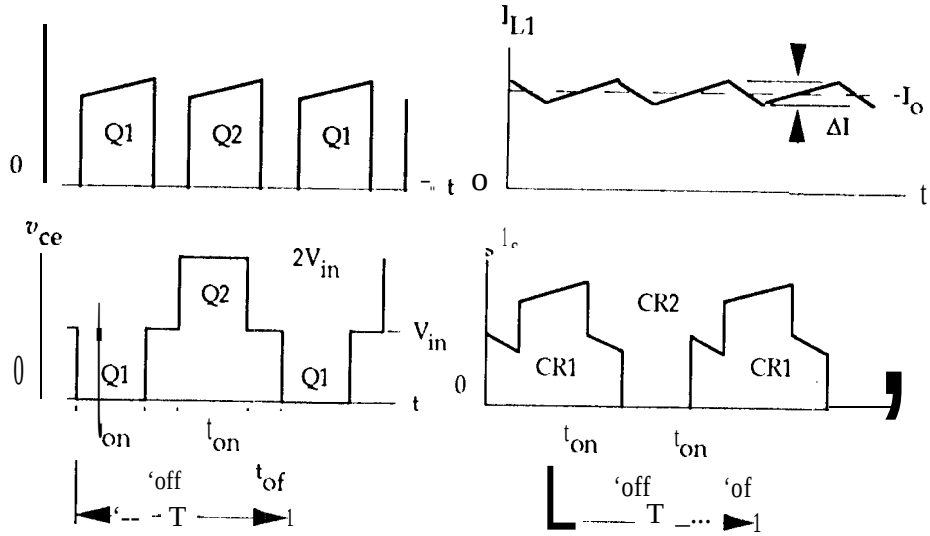

Figure 2,2 Push-pull ideal voltage and current waveforms.

Half Bridge Converter

The half bridge is also a push-pull version of the buck converter (Figure 2.3). It has two transistors Q] and Q2 that operate alternately. The input voltage is divided between two capacitors Cl and C2. The common connection point of these two capacitors has an average voltage of $V_{in}/2$. The big advantage of the half bridge over push-pull centertap configuration is that transistors Q1 and Q2 see only the peak voltage of Vi_n rather than $2V_{in}$, as in the case of the standard push-pull configuration. However, because the transformer has only $Vi_n/2$ applied to the primary for the same power, the average input current is doubled. The half bridge has the same problem as the push-pull converter transformer when subjected to small amounts of dc imbalance which can lead to core saturation. The big problem in this type of circuit is **shoot-**through. Shoot-through occurs when both transistors turn on at the same time, creating a short across the main bus; this would be a disaster and destroy both transistors. This situation can happen at turn on, line or load transient, or instability within the closed loop system. The voltage and current waveforms are shown in Figure 2.4.

The Transformer apparent power is:

Secondary P_{ts} with a center tap is

$$P_{ts} = (V. + V_d)I_o\sqrt{2} \text{ [watts]} \tag{2.7}$$

Secondary Pts without a center tap is:

$$P_{ts} = (V_o +- V_d)I_o \text{ [watts]} \tag{2.8}$$

Total secondary P_{ts} is

$$P_{ts} = \#1P_{ts01} + \#2P_{ts02} + \#nP_{ts} \ldots\ldots\ldots \tag{2.9}$$

Primary P_{tp} is:

$$P_{tp} = \frac{P_{ts}}{\eta} \text{ [watts]} \tag{2.10}$$

Total Transformer Apparent Power P_t is:

$$P_t = P_{tp} + P_{ts} \text{ [watts]} \tag{2.11}$$

The following is the d.c. transfer function for the half bridge converter.

$$\frac{I_{in}}{I_o} = \frac{V_o}{V_{in}} \approx \frac{1}{2} \cdot \frac{N_s}{N_p} \cdot \frac{2t_{on}}{T} \tag{2.12}$$

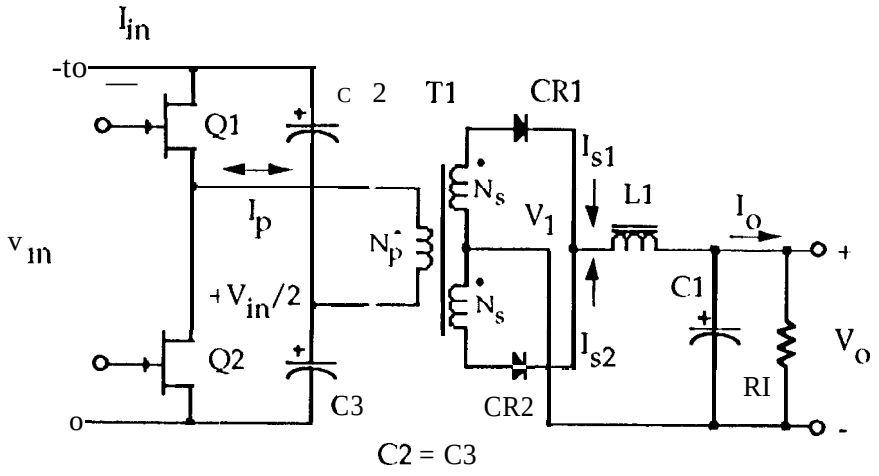

Figure 2,3 Half bridge switching converter.

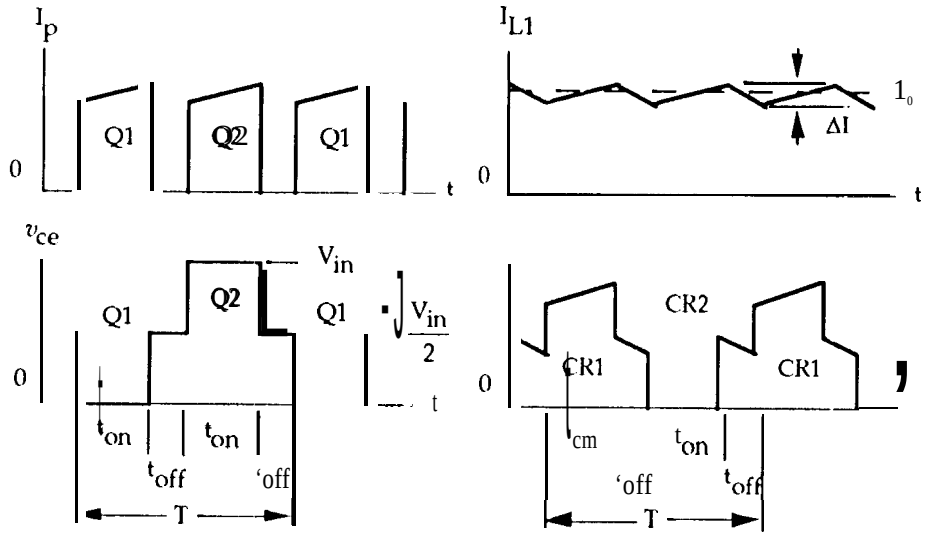

Figure 2.4 Half bridge ideal voltage and current waveforms.

Full or H Bridge Converter

The full bridge is also a push-pull version of the buck converter; it has four transistors that operate alternately (either Q1 and Q4 or Q2 and Q3) as shown in Figure 2.5. The full bridge has the same big advantage as the half bridge over the push-pull centertap configuration in that the switching transistors see only V_{in} rather than $2V_{in}$. The full bridge has the same problem as the push-pull converter, in that small amounts of dc imbalance can lead to transformer core saturation. Again, the big problem in this type of circuit is shoot-through. Shoot-through occurs when both transistors turn on at the same time, creating a short across the main bus; this would be a disaster and destroy both transistors. This situation can happen at turn-on, line or load transient, or instability within the closed loop system. Normally the full bridge is used at higher power levels than the half bridge. The voltage and current waveforms are shown in Figure 2,6. The idealized B-H loop for the push-pull converter is shown in Figure 2,7. The more realistic B-H loop of a push -pull converter design is shown in Figure 2.8. This design. with is a magnetic material having a square B-H loop, will always operate at either end of the B-H curve. This can be aggravated by either an unbalance drive or an unbalance load.

The Transformer Apparent Power P_t is:

Secondary P_{ts} with a center tap is:

$$P_{ts} = (V_o + V_d)I_o\sqrt{2} \text{ [watts]} \tag{2.13}$$

Secondary P_{ts} without a center tap is:

$$P_{ts} = (V_o + V_d)I_o \text{ [watts]} \tag{2.14}$$

Total secondary P_{ts} is:

$$P_{ts} = \#1P_{ts01} + \#2P_{ts02} + \#nP_{ts} \ldots\ldots\ldots \tag{2.15}$$

Primary P_{tp} is:

$$P_{tp} = + \text{ [watts]} \tag{2.16}$$

Total Transformer Apparent Power P_t is:

$$P_t = P_{tp} + P_{ts} \text{ [watts]} \tag{2.17}$$

The following is the d.c. transfer function for the full bridge converter.

$$\frac{V_o}{V_{in}} \approx \frac{I_{in}}{I_o} \approx \frac{N_s}{N_p} \cdot \frac{2t_{on}}{T} \tag{2.18}$$

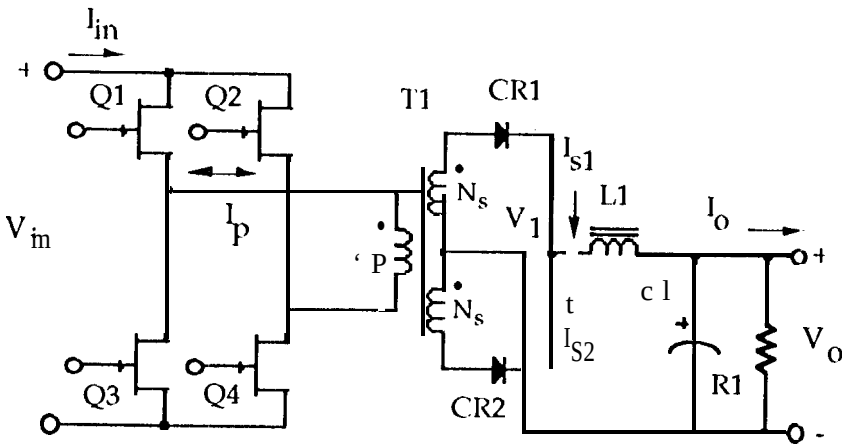

Figure 2.5 Full or H bridge switching converter.

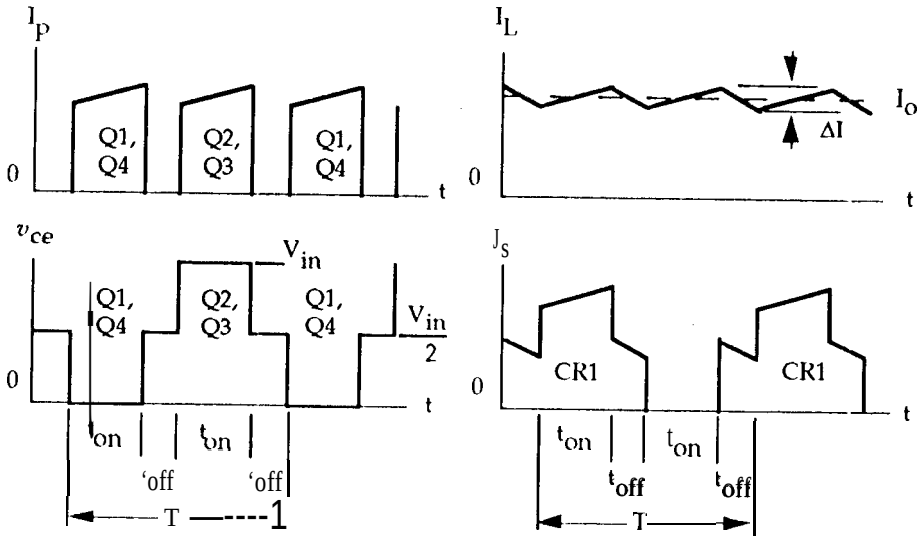

Figure 2.6 Full or H bridge ideal voltage and current waveforms.

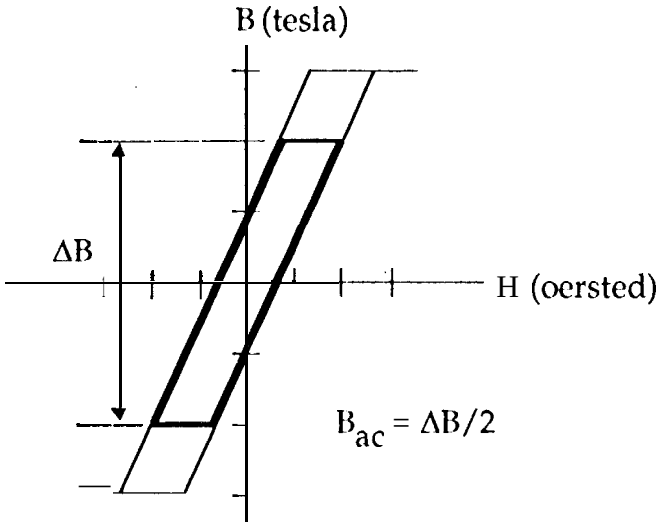

Figure 2.7 Idealized push-pull B-H loop.

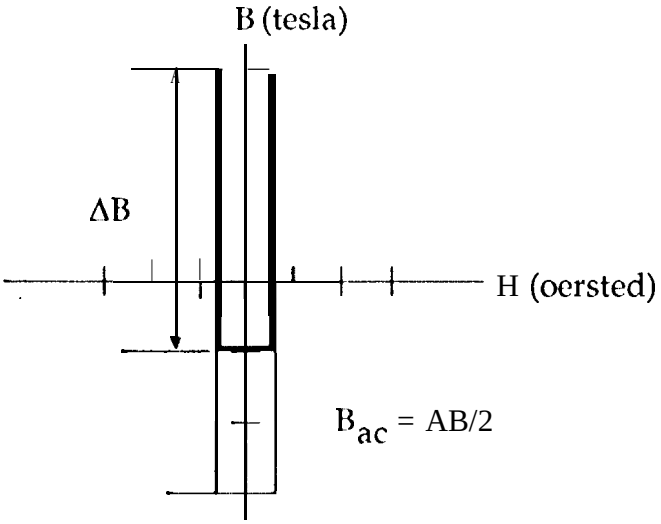

Figure **2.8** Push-pull with a square B-H loop.

Single Ended Forward Converter

The forward converter shown in Figure 2.9 is a transformer-isolated version of the buck converter. The forward converter is almost as simple in structure as the single transistor flyback converter. The voltage and current waveforms are shown in Figure 2.10. The ripple and output power capability are comparable to those of the push-pull converter, In the push-pull converter, resetting of the core occurs every alternate half cycle and is done automatically from the drive, In the single forward converter, resetting the core is not performed by the drive. Resetting the core is accomplished by a demagnetization or demag winding and diode.

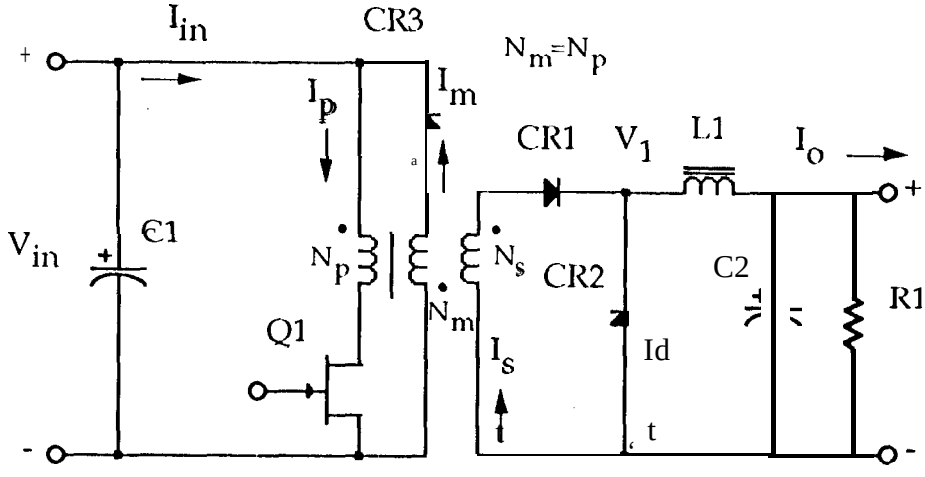

Figure 2.9 Single ended forward switching converter.

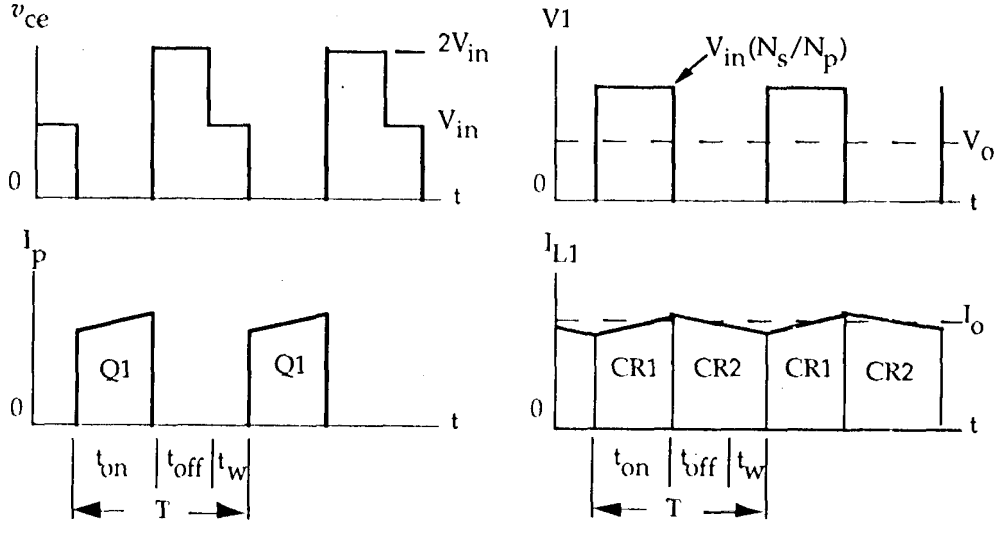

Figure 2.10 Single ended forward ideal voltage and current waveforms.

'I'his demag winding is wound bifilar with the primary in order to get the tightest coupling, When the switching transistor Q] is turned on, the magnetizing current I_m will buildup until Q1 is turned off. When Q1 is turned off, the magnetic field created by the magnetizing current, I_m, will collapse and the polarity of the winding will reverse, causing the diode CR3 to conduct and to clamp the demag winding to Vi_n. This demag winding is of opposite polarity to the primary winding and when CR3 conducts, will apply a reverse volt-seconds equal to (and cancel) the volt-seconds applied during the on time. With the demag winding clamped to the input voltage via CR3, this puts a reverse voltage of $2Vi_n$ on Q1 during the off time. The single forward converter normally does not have the push-pull converter's problem of dc unbalance in the transformer core. As long as the demag winding is tightly coupled to primary. The idealized forward converter B-H loop is shown in Figure 2.11.

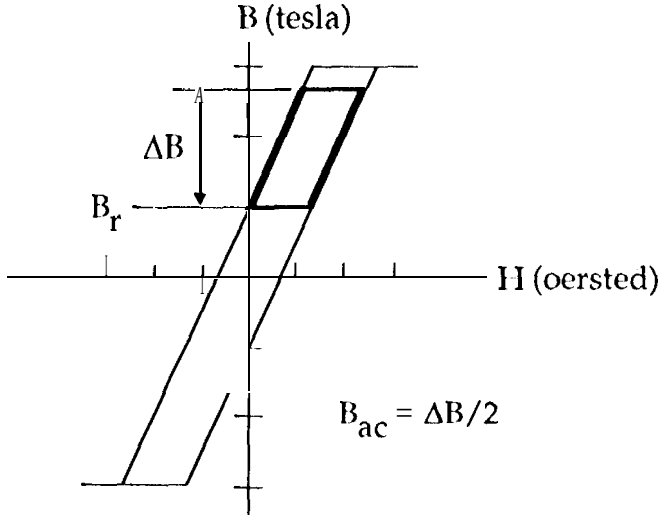

Figure 2.11 Idealized forward converter transformer B-H loop.

The following is the d.c. transfer function for the single ended forward converter,

$$\frac{V_o}{V_{in}} \cong \frac{I_{in}}{I_o} \cong \frac{N_s}{N_p} \cdot \frac{t_{on}}{T} \tag{2.19}$$

Two Transistor Forward Converter

The two transistor forward converter is shown in Figure 2.12. The operation of the two-transistor forward converter is the same as the single transistor. There are two significant advantages over the single transistor, and that is in the off state. When the transistors Q1 and Q2 are switched on, the magnetizing current I_m will build up until Q1 and Q2 are turned off. When Q1 and Q2 are

turned off, the magnetic field created by the magnetizing current I_m will collapse, and the polarity of the winding will reverse; this causes diodes CR1 and CR2 to conduct, clamping the primary winding to Vi_n. The switching transistors Q1 and Q2 are subjected to only the input voltage V_{in} rather than $2V_{in}$ as in the single transistor configuration. The voltage and current waveforms are shown in Figure 2.13.

The other advantage is that no leakage inductance energy is dissipated in snubber networks. Instead, energy stored in the leakage inductance during the on time is fed back during the off time into input storage capacitor Cl via CR1 and CR2.

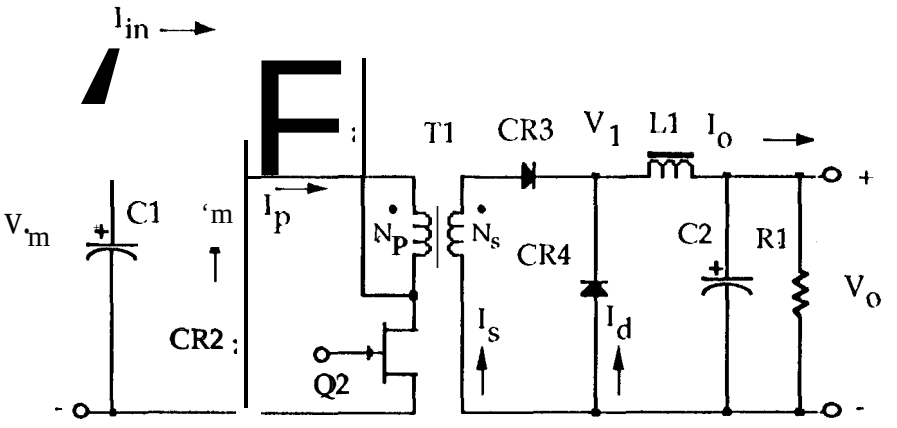

Figure 2.12 Two transistor forward switching converter.

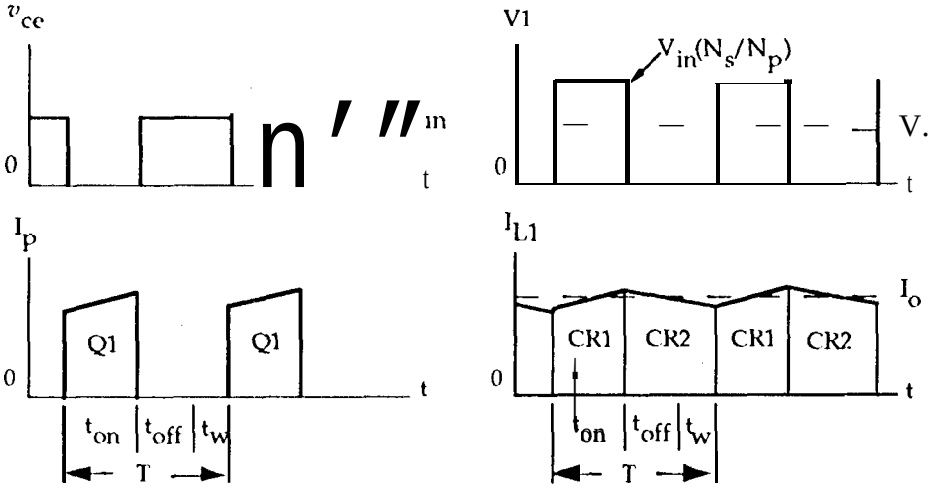

Figure 2.13 Two transistor forward ideal voltage and current waveforms.

The following is the d.c. transfer function for the two-transistor forward converter.

$$\frac{V_o}{V_{in}} \cong \frac{I_{in}}{I_o} \cong \frac{N_s}{N_p} \cdot \frac{t_{on}}{T} \tag{2.20}$$

The Weinberg Converter

The Weinberg converter is a push-pull converter with an inductor in series with the input power source as shown in Figure 2.14, This series inductor gives this push-pull converter a new name called current fed inverter. The ideal voltage and current waveforms are shown in Figure 2.15.

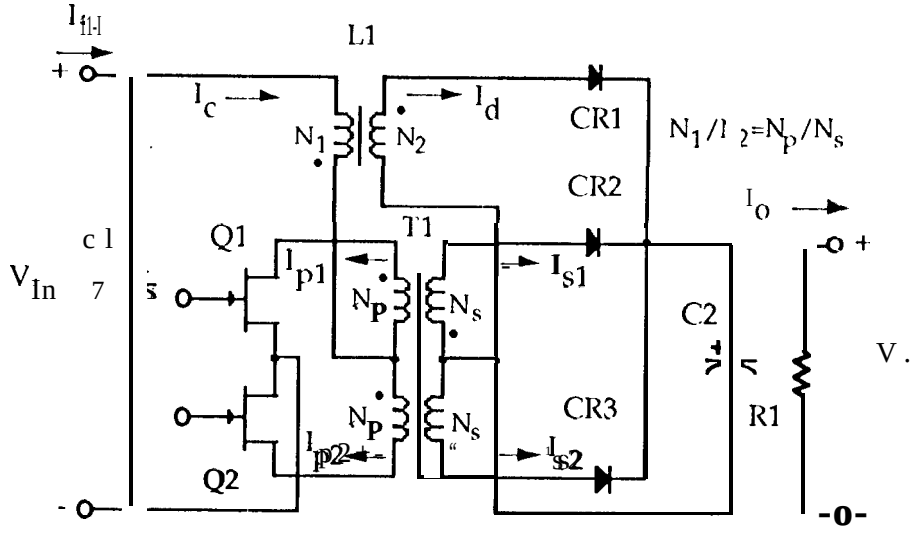

Figure 2,14 Current-fed Weinberg switching converter,

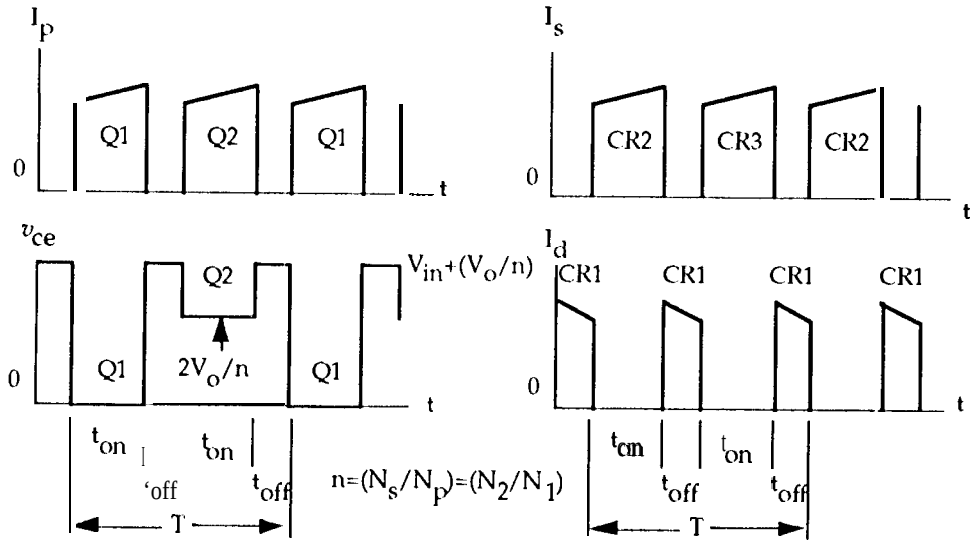

Figure 2.15 Weinberg ideal voltage and current waveforms.

The fundamental design requirement for this series inductor is that the reflected load current should never go to zero, so $I_{o(min)} = I_{pk}/2$ as shown in Figure 2.16. This series inductor has a special secondary winding. The secondary winding is used when the switching transistors Q1 and Q2 could be off at the same time. If the transistors are never off at the same time and there is some overlapping, then the secondary winding is not required. When the switching transistors are used in a pulse width modulator (PWM) mode, both transistors could be off at the same time. If both transistors could be off at the same time, then the series inductor requires a secondary winding to provide a path for transferring this stored energy. This isolated secondary winding gives the design engineer the capability to either take the stored energy and return it back into the source or to dump it into the secondary load. Whichever way the engineer chooses will result in another trade off. If the engineer elects to take the stored energy and return it to the source, then the input current ripple is minimized. If the engineer elects to take the stored energy and dump it to the load, then the output voltage ripple is minimized. The secondary winding must be tightly coupled to the primary to reduce voltage spikes. The major advantage of the current-fed converter is the single input inductor and having no output inductor. This makes it a good choice for a power converter with multiple outputs.

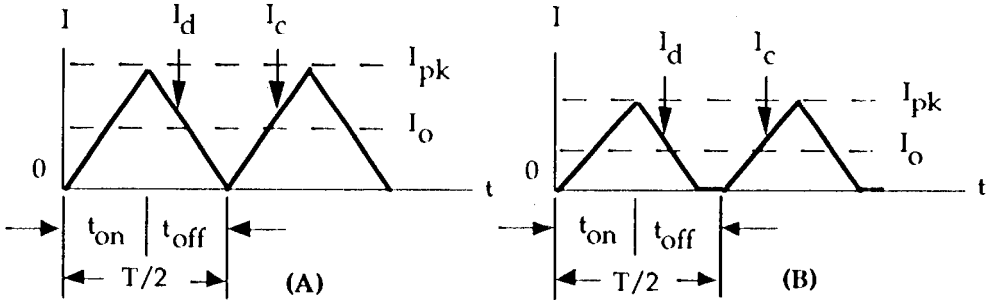

Figure 2.16 Minimum load continuous current A; discontinuous current B.

The following is the d.c. transfer function for the Weinberg converter.

$$\frac{V_o}{V_{in}} \approx \frac{I_{in}}{I_o} \approx \frac{N_s}{N_p} \cdot \frac{2t_{on}}{T} \tag{2.21}$$

Mag-Amps For Switching Converters

in recent years, mag-amps have found their way back to power conversion after being dormant for a long time, Mag-amps are being used more and more as the output voltage control elements in high frequency dc to dc converters. The control circuitry for these new mag-amps is very simple and cost effective. Integrated circuit manufacturers are offering specially-designed IC

mag-amp controller chips (such as the UC-1838 by Unit rode) with voltage and current control. Engineers have also adapted other IC's for mag-amp control (such as the TL431, an adjustable precision shunt regulator by Texas Instruments and other manufactures).

This new mag-amp or controllable volt-second device being used today in power converters is a very simple two-terminal magnetic component. The mag-amp is a copper coil wound on a core which has a relatively square B-H loop characteristic. There are basically two parameters the mag-amp must be design to meet: (1) it must have the proper turns to support at least a portion of the applied voltage for control, or all of the applied voltage for a wide range or short circuit control; and (2) it must have the proper number of turns to keep the magnetizing current, I_m, at reasonable level. Magnetizing current, I_m, must be supplied by the load or bleeder at very light loads or the circuit will become unstable. The magnetizing current I_m for the mag-amps sets the control current I_c.

The mag-amp has two operating modes-unsaturated and saturated. The first is when the core is unsaturated and supports the full volt-seconds with only the magnetizing current I_m flowing shown in Figure 2.17 A. The second, when the core is fully saturated and the impedance of the mag-amp drops to near zero, full current flows to the load with a negligible voltage drop to the saturated inductance shown in Figure 2.17 B. Thus a mag-amp comes the closest yet to a true switch.

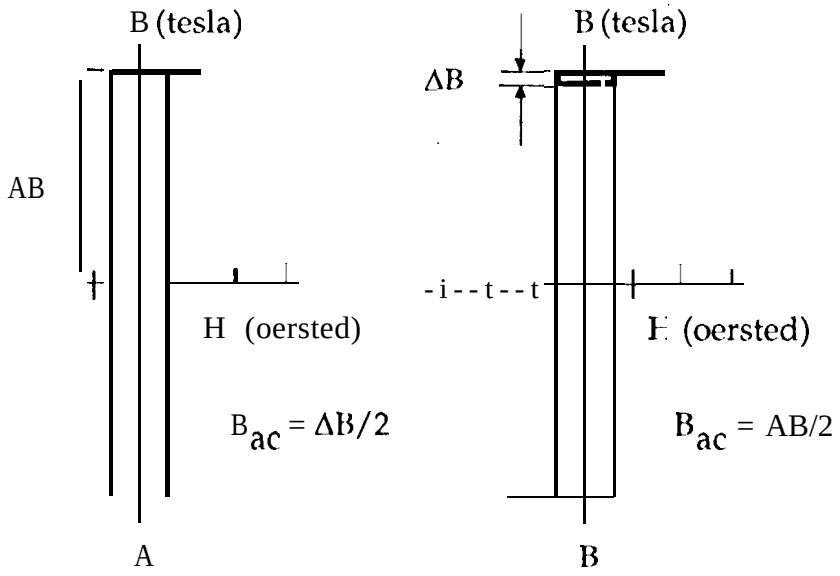

Figure 2.17 Mag-Amp B-H loop in the unsaturated and saturated condition

Single Ended Forward Mag-Amp Converter

The single ended forward converter is a good candidate for the mag-amp post regulators since both circuits require the minimum of parts shown in Figure 2.18. The mag-amp is well-suited for converters that have multiple outputs, where high performance such as efficiency, reliability and size are required of more than one of the outputs. Mag-amps can also work well in low or high power converters having a single output with high efficiency. The engineer should remember the mag-amp must be designed to operate with a transformer voltage that is over twice the dc output voltage. Voltage and current waveforms are shown in Figure 2.19.

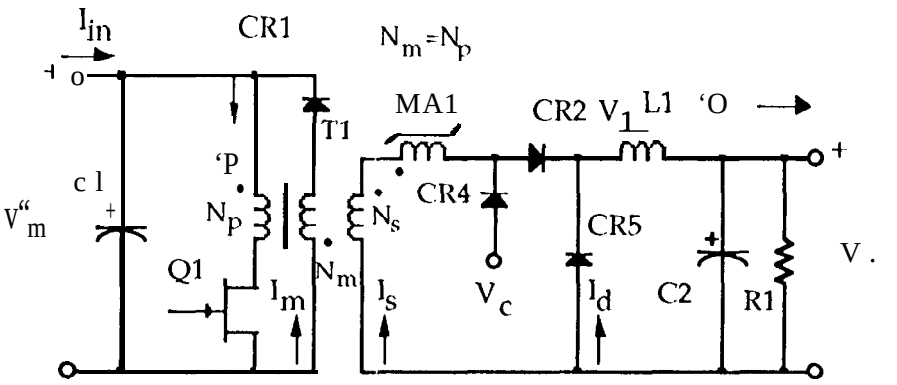

Figure 2.18 Single forward Mag-Amp switching converter.

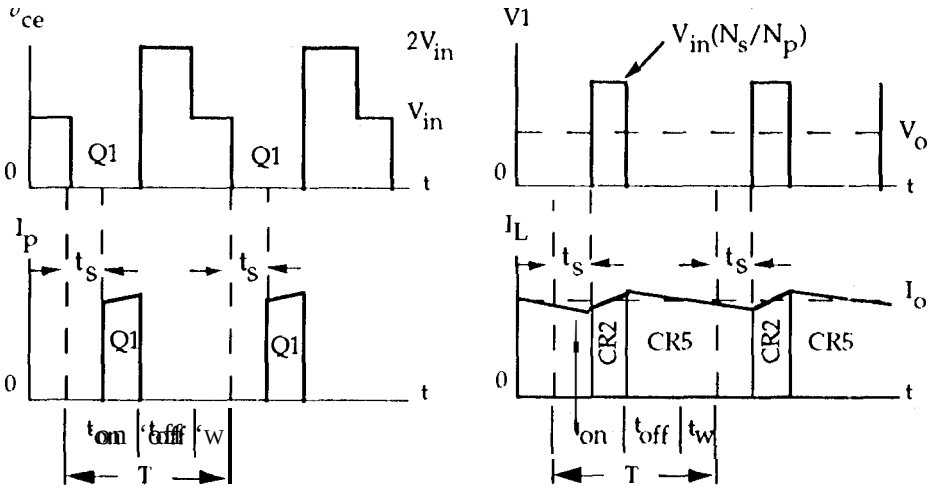

Figure 2.19 Single ended forward Mag-Amp ideal voltage and current waveforms. (ts = time to saturate MA1)

The following is the d.c. transfer function for the single ended forward mag-amp converter

$$\frac{V_o}{V_{in}} \approx \frac{I_{in}}{I_o} \cong \frac{N_s}{N_p} \cdot \frac{t_{on} - t_s}{T} \tag{2,22}$$

Push-Pull **Mag-Amp** Converter

The push-pull mag-amp will function on all of the basic push-pull configurations with the same performance as in the single ended forward converter shown in Figure 2,20. In the mag-amp push-pull configuration, the r-nag-amps will see only half of the average dc output current.

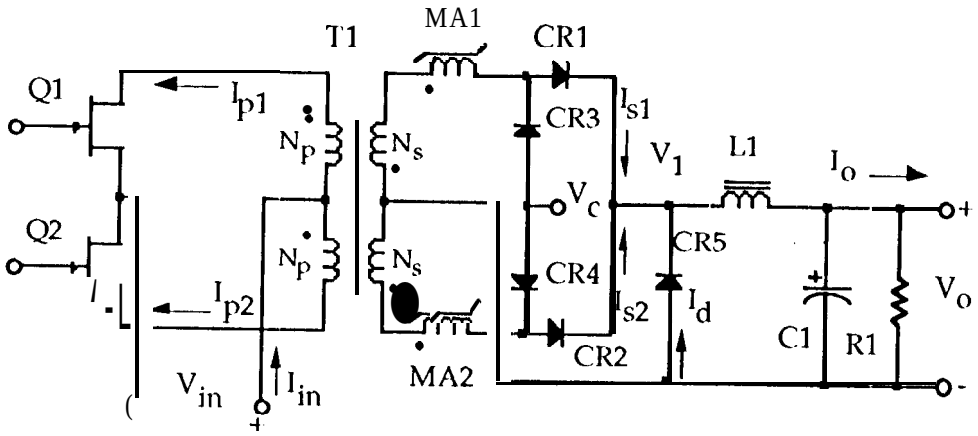

Figure 2,20 Push-pull Mag-Amp switching converter.

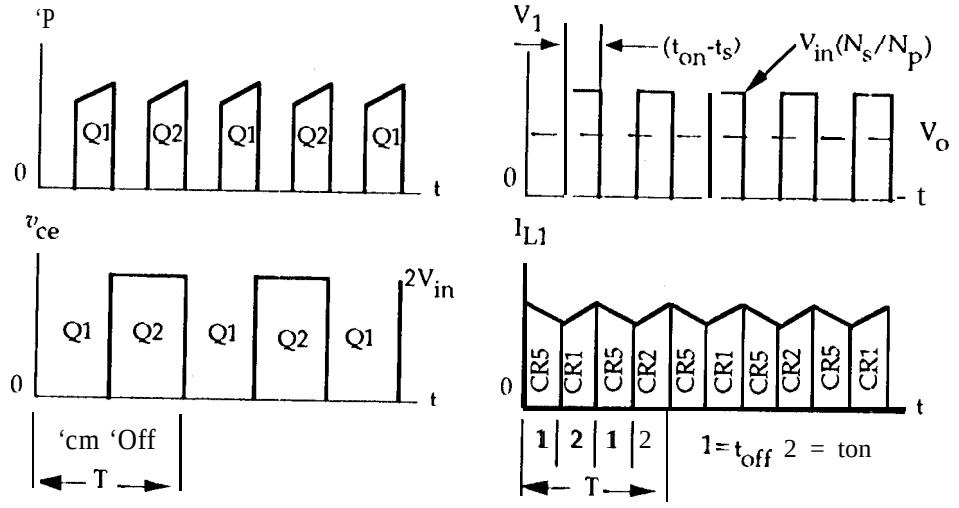

Figure 2.21 Push-pull Mag-Amp ideal voltage and current waveforms.
(ts = time to saturate MAI or MA2)

The following is the d.c. transfer function for the push-pull mag-amp converter,

$$\frac{V_o}{V_{in}} \approx \frac{I_{in}}{I_o} = \frac{N_s}{N_p} \cdot \frac{2(t_{on} - t_s)}{T} \tag{2.23}$$

Small amounts of dc imbalance in push-pull converter transformers can lead to core saturation hence, care must be taken in regard to the mag-amp cores. These mag-amp cores should be matched as closely as possible in order to get good volt-second capability for proper control. Any imbalance in the mag-amps should be minimized as this is reflected to the primary as a dc offset. The magnetics industry normally offers two types of core matching methods, Sine Current E-I Loop and the Constant Current Flux Reset. The Constant Current Flux Reset test method has been chosen as a standard by the IEEE for magnetic amplifier circuits. Voltage and current waveforms are shown" in Figure 2.21.

Energy Storage Magnetics in Switching Circuits

Introduction

There are three basic switching converter configurations from which the majority of present-day design are derived:

1. Step down, or buck, converter.
2. Step up, or boost, converter.
3. Inverting, or buck boost, converter.

The principle behind flyback converters is based on the storage of energy in the inductor during the charging on period ton, and the discharge of the energy to the load during the off period t_{off}.

Energy Transfer

Two distinct modes of operation are possible for the switching converters shown in Figure 2.22:

Discontinuous mode- all energy stored in their energy storage inductance is transferred to output capacitor and load circuit before another switching period accurs. This topology results in a smaller size but requires a quality capacitor.

Continuous mode- energy stored in their energy storage inductance is not completely transferred to the output capacitor and load circuit before another switching period accurs.

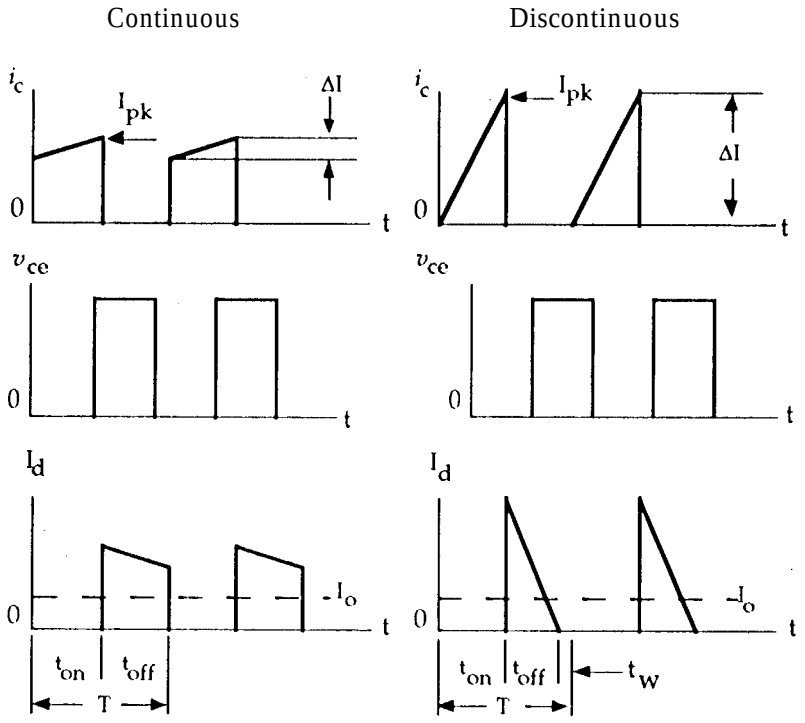

Figure 2.22 Cent inuous and discontinuous voltage and current waveforms.

In the discontinuous mode, a smaller inductance is required; this results in higher peak current in the transistor Q1. As a consequence, winding losses are increased because of the rms values of a trapezoidal and a sawtooth wave form. This also results in higher ripple current in the input capacitor and a higher peak current to the switching device. The advantage of this circuit, other than having a smaller inductor, is that when the switching device is turned on, the initial current is zero. This means the output diode CR1 has completely recovered, and the switching device does not momentarily turn on into a short, This reduces the EMI interference.

In the continuous mode, a larger inductor is required; this results in a lower peak current at the end of the cycle than in a discontinuous system of equivalent output power. The continuous mode demands a high current flowing through the switch during turn-on and can lead to higher switch dissipation. The relationship between the II-H loops for continuous and discontinuous operation is shown in Figure 2.23.

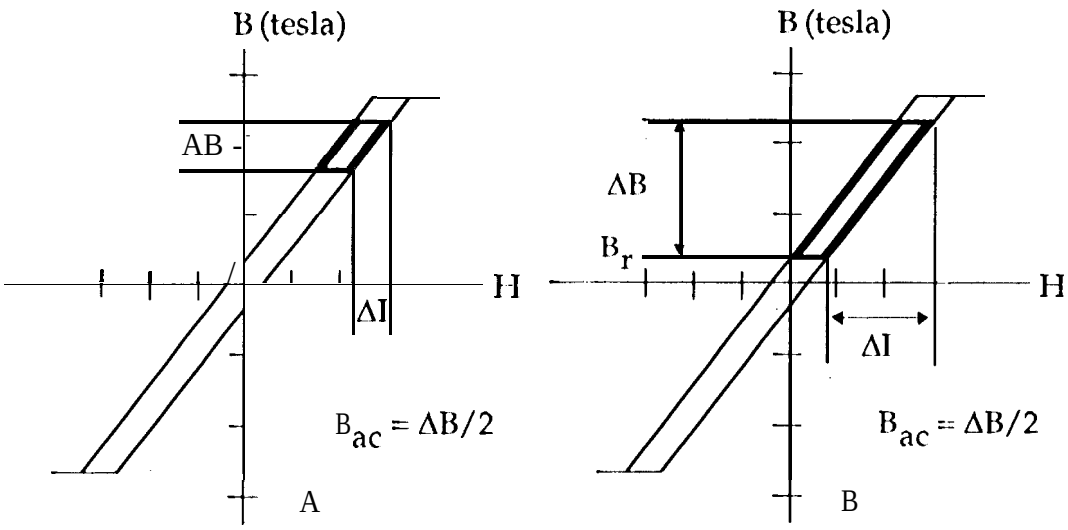

Figure 2.23 Continuous (A) and Discontinuous (B), B-H loops showing ΔB and Al.

The Continuous and Discontinuous Boundary

When the load current increases, the control circuit causes transistor Q1 to increase ton (on time). The peak current in the inductor will then increase, resulting in a steady reduction in the dwell time t_w. When the load current increases to a critical level, t_W becomes zero, and the discontinuous boundary is reached. If the load current is further increased, the inductor current will no longer discharge to zero every cycle, and continuous current operation results.

The Buck **Flyback** Regulator

The first switching converter is the buck, shown in Figure 2.24. The output voltage of this converter is always less than its input voltage. In the buck circuit, the transistor switch Q1 is placed in series with the dc input voltage. The transistor switch Q1 interrupts the dc input voltage, providing a variable-width pulse (duty ratio) to a simple averaging LC filter. When the transistor switch Q] is closed, the dc input voltage is applied across the output filter inductor L2, and current flows through the inductor to the load. When the switch Q1 is open, the energy stored in the field of the inductor L2 maintains the current through the load. The voltage and current waveforms are shown in Figure 2,25 for both modes of energy storage.

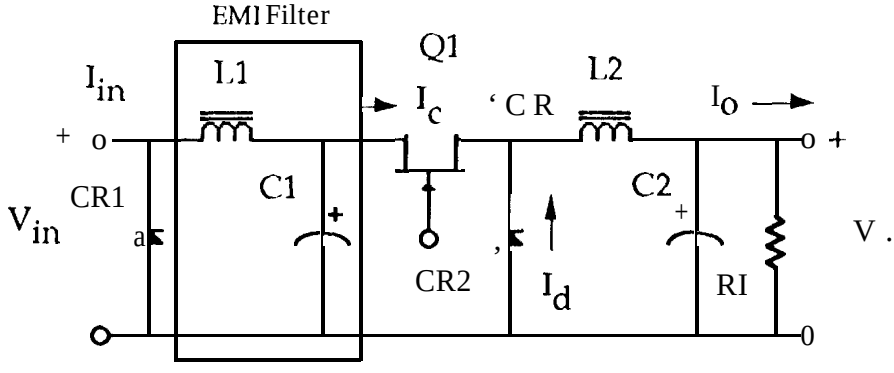

Figure 2.24 Buck flyback switching converter with an input LC filter.

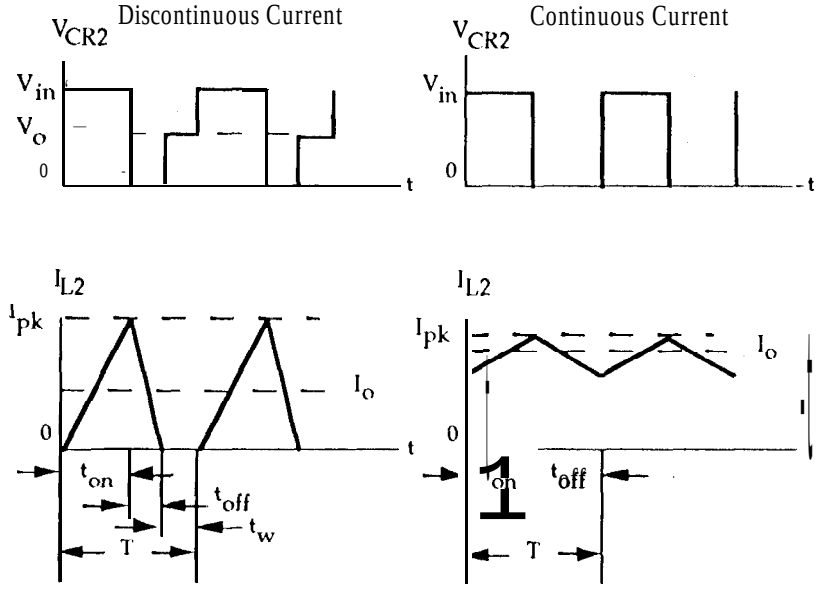

Figure 2,25 Buck ideal voltage and current waveforms.

In the buck circuit, the peak switching current is proportional to the load current l.. The output voltage is equal to the input voltage times the duty ratio.

$$V_o = V_{in}(\text{Duty Ratio}) \quad [\text{volts}] \tag{2.24}$$

The Boost **Flyback** Regulator

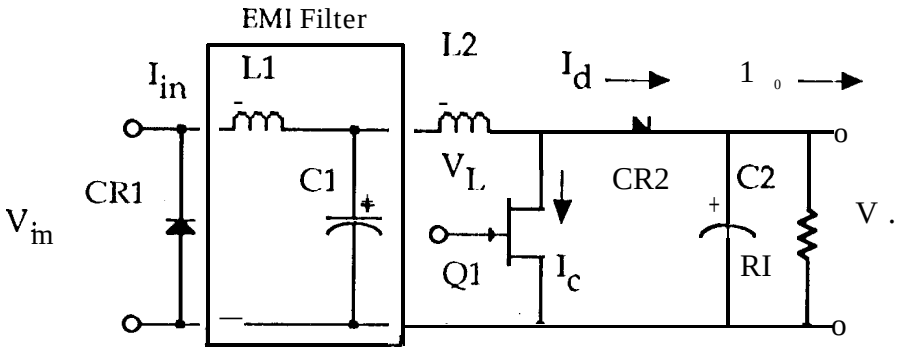

Figure 2.26 Boost flyback switching converter with an input LC filter.

Boost Voltage and Current Waveforms

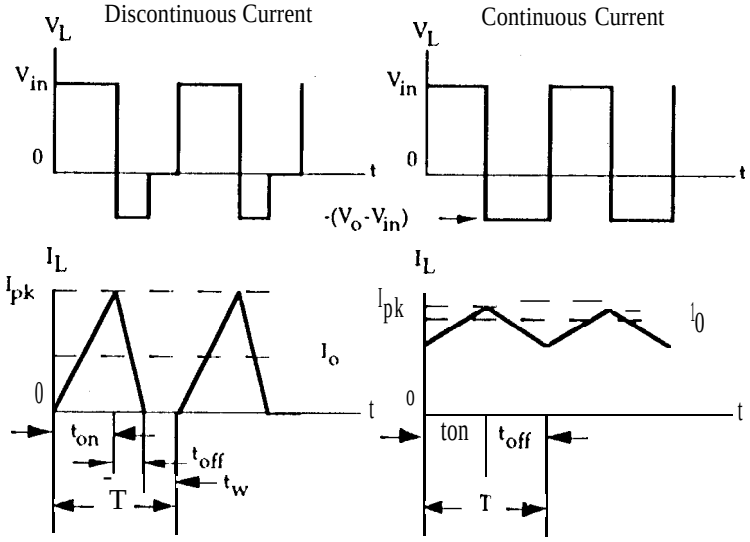

Figure 2.27 Boost ideal voltage and current waveforms.

The second switching regulator is the boost, shown in Figure 2.26. In this circuit, the output voltage is always greater than the input voltage. The boost circuit first stores energy in inductor 1..2 and then delivers this stored energy along with the energy from the dc source to the load. When the transistor switch Q1 is closed, current flows through inductor L2 and the transistor switch Q1, charging inductor L2 but delivering no current to the load. When the switch is open, the voltage across the load equals the dc input voltage plus the charge stored in inductor L2. Inductor L2 discharges, delivering current to the load, The voltage and current waveforms are shown in Figure 2.27 for both modes of energy storage..

The peak switching current in the boost circuit is not related to the load current. The power output of the boost regulator can be determined by the following equation:

$$P_o = \frac{L(I_{pk})^2 f}{2} \quad \text{[watts]} \tag{2,25}$$

The output voltage is

$$V_o = V_{in} \frac{1}{1- \text{(Duty Ratio)}} \quad \text{[volts]} \tag{2.26}$$

The Buck Boost Inverting Regulator

The third switching regulator is the inverting type, a variation of the boost circuit shown in Figure 2.28. The inverting regulator delivers only the energy stored by the inductor L2 to the load. This circuit can step the input voltage up or down. When the transistor switch Q1 is closed, the inductor is charged, but no current is delivered to the load because diode CR2 is back-biased. When the transistor switch Q1 is open, the blocking diode is forward-biased and the energy stored in inductor L2 is transferred to the load. The voltage and current waveforms are shown in Figure 2.29,

The inverting circuit delivers a fixed amount of power to the load regardless of the load impedance, If the load is known, the output voltage maybe calculated using the following equation:

$$V^* = \sqrt{P_o R_L} = I\sqrt{\frac{LfR_L}{2}} \quad \text{[volts]} \tag{2.26}$$

The inductor current is proportional to the transistor switch Q1 ton or duty ratio. The regulation is achieved in all three types by varying the duty ratio.

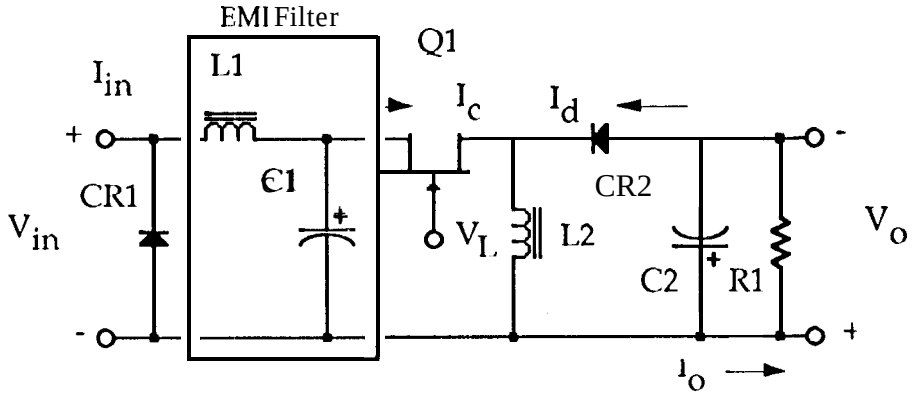

Figure 2.28 Buck-boost inverting switching converter with an input LC filter.

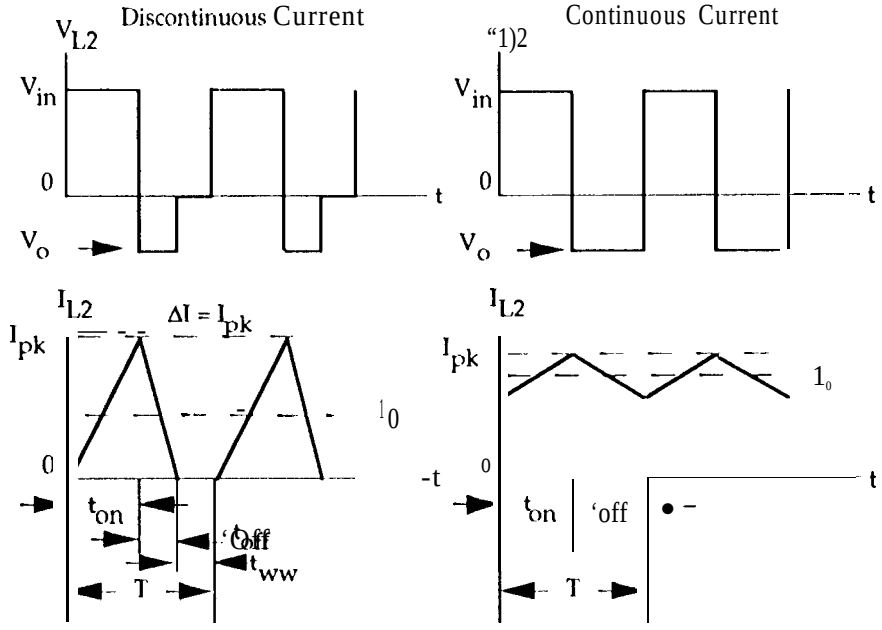

Figure 2,29 Inverted buck-boost ideal voltage and current waveforms.

Isolated Buck-Boost **Flyback** Regulator

The isolated buck-boost **flyback** regulator looks very much like a single-ended forward converter shown in Figure 2.3-. The similarity is the forward converter uses a multi-winding transformer, while the isolated buck- boost uses a multi-winding inductor.

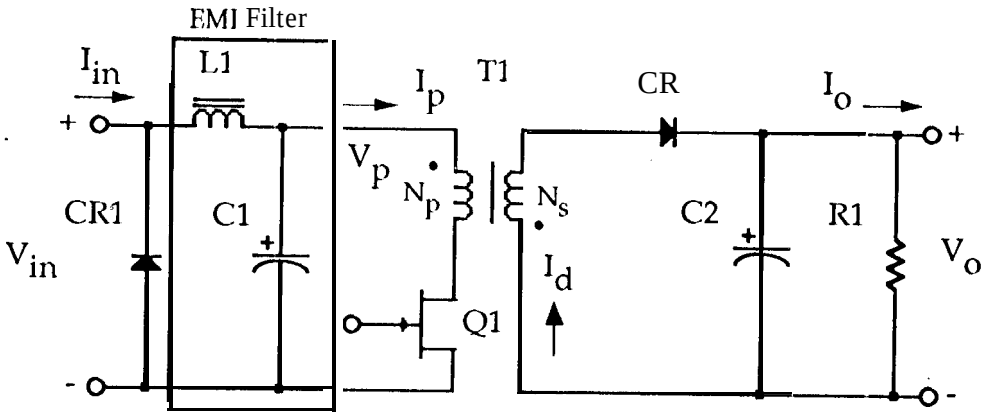

Figure 2.30 Buck-boost **flyback** switching converter with an input LC filter.

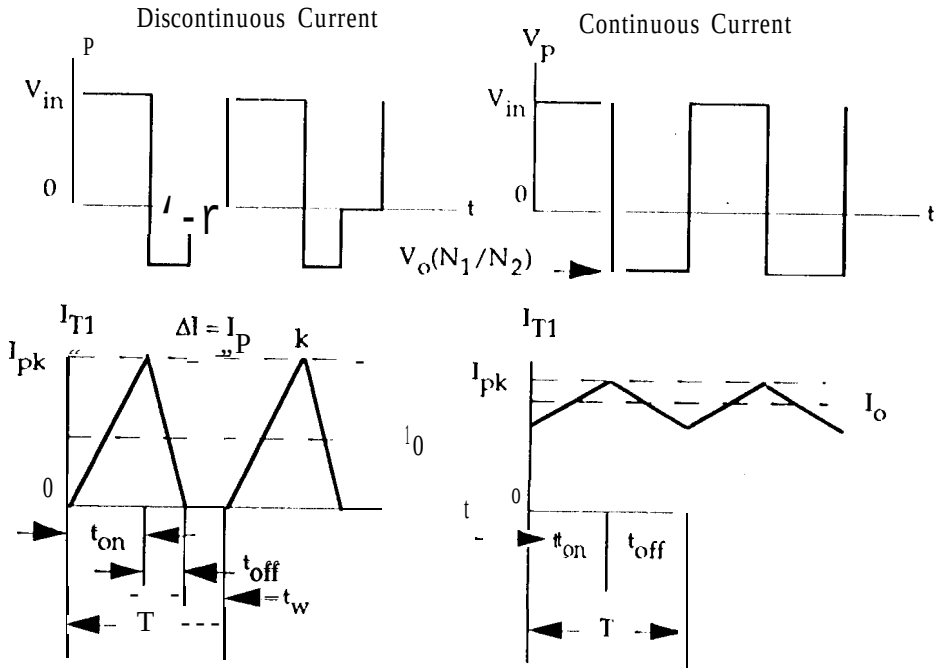

Figure 2.31 Isolated buck-boost ideal voltage and current waveforms.

The difference is that a transformer transfers power and inductors store energy. If one were to replace the winding on the inverted buck-boost converter with two identical windings using one

for the primary and the other for the secondary, then an isolated buck-boost converter would result. This circuit can provide line isolation and also have the capability of multiple outputs which require only a diode and a capacitor; the filter inductor is built in. The isolated buck-boost circuit is quite popular in low power applications because of simplicity and low cost. This circuit does not blend itself to the VDE specification because of the required voltage insulation between primary and secondary. This voltage insulation requirement will result in large leakage inductance on the primary. Care must be taken because this leakage inductance could generate high voltage spikes on the primary. The voltage and current waveform are shown in Figure 2.31 for both modes of energy storage..

Coupled Output Filter Inductor

in power converters with more than one output, it is normal to close the loop around the high power output and slave the other outputs. Separate filter inductors are normally used in each output, The performance of these independent filters, in regard to load and dynamic cross regulation, is very poor at best. The coupled output filter inductors are used on power converters with multiple outputs in place of using separate filter inductors shown in Figure 2,321, When the coupled inductor is designed correctly, it will improve the load regulation, dynamic cross regulation and the overall performance of the multiple output converter. The voltage and current waveforms are shown in Figure 2.33.

Critical Design Areas (Use caution when designing)

1. The turns ratio of the coupled inductor windings must be identical to the transformer turns ratio for each output. If the turns ratio is not controlled, then large ripple currents will circulate among the various outputs. The requirement of having the turns ratio of the coupled inductor and the power transformer be equal could lead to output voltage tradeoffs.

$$\frac{N_{L2}}{N_{L1}} = \frac{N_2}{N_1} \qquad (2,27)$$

2. The coupling (leakage inductance) between the winding of the inductor should be used to balance the ac ripple current in each winding.
3. Winding. fabrication and test specification should be documented in sufficient detail as to the layout, winding configuration and insulation in order to get good repeatability in transformer and inductor fabrication.

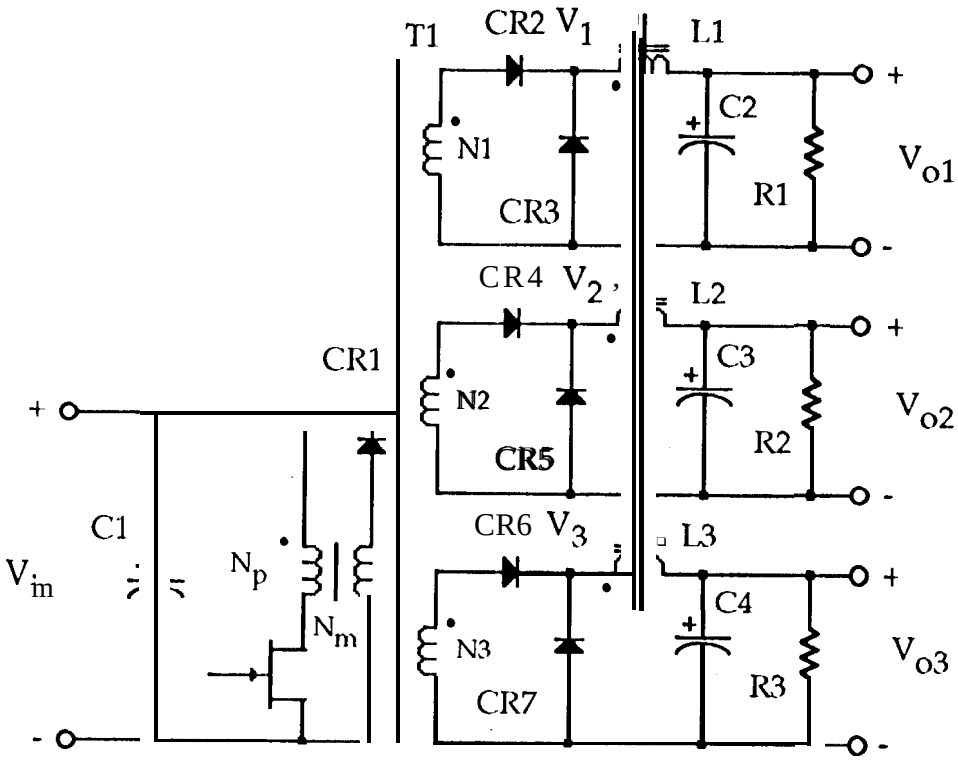

Figure 2.32 Three output coupled inductor.

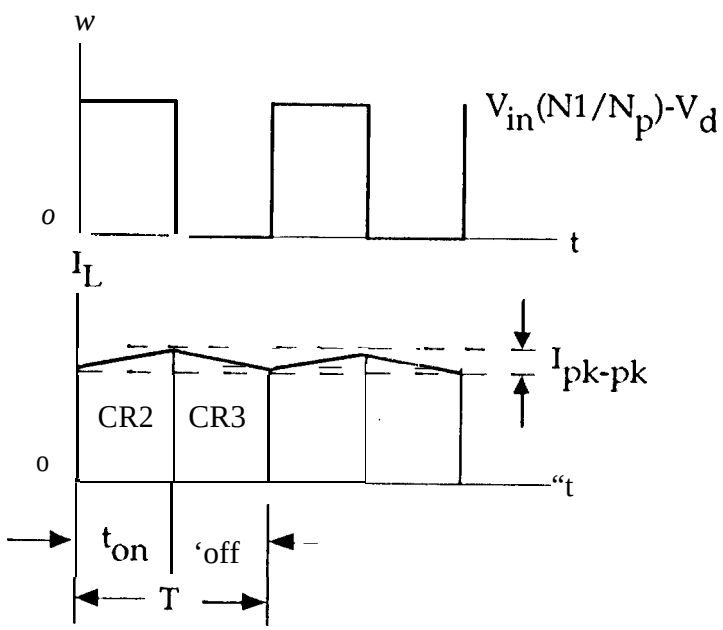

Figure 2,33 Typical coupled inductor ideal voltage and current waveforms,

Input Filter Inductor

The input filter inductor shown in Figure 2.34 is designed to reduce the ripple current at the source. There are many magnetic materials that can be used in designing the input filter inductor. The specification could dictate the material to be used, including size. If size is the main goal, then the magnetic material with the highest flux density would be the choice. Designing inductors to carry a dc current will require a magnetic material with an airgap.

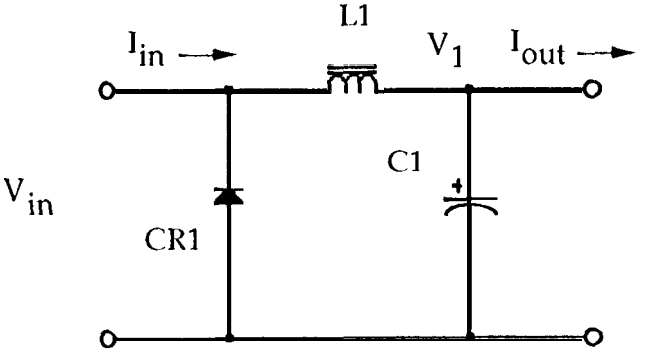

Figure 2.34 Simple input LC filter.

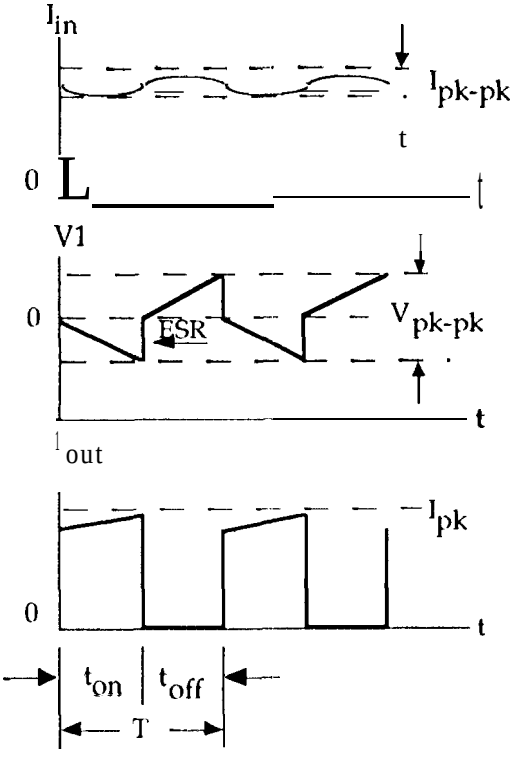

Figure 2,35 Input filter ideal voltage and current waveforms.

There are two ways to obtain an airgap in a magnetic material: (1) inserting a gapping material such as fish paper or mylar in series with the magnetic path length, (2) using a powder core that has a distributed air gap throughout the core structure, or (3) ordering a ferrite core with a specified gap ground in the center leg. The input filter inductor should be designed with a high self-resonant frequency. This is acheived by picking a core with minimum window or winding area. A minimum winding area would require minimum turns, resulting in minimum capacitance and a high self-resonant frequency. Normally, the ac flux is so low in input filter inductors that core loss is not a major concern, The voltage and current waveforms are shown in Figure 2.35.

Output Filter Inductor

The output filter inductor L1 shown in Figure 2.36 it is about the most common and most frequently designed of all magnetic components used de-de converters. The voltage and current waveforms are shown in Figure 2.37. This type of output inductor is common to the push-pull and forward converter. It is most commonly referred to as the buck configuration or buck converter. The output filter inductor typically is used to maintain a continuous current at minimum load. The filter inductor accomplishes this by storing energy during the t_{on} portion of the period, which it then discharges during the corresponding t_{off} portion of the same period. In addition, this inductor aids in smoothing the output ripple voltage.

When Q1 is turned on, voltage is transferred to the load via the transformer secondary windings. Output diode CR1 is forward biased and current flows to the output load while the current builds up linearly in L] during the t_{on} portion of the period. When Q1 is turned off the induced voltage at the transformer falls to zero. In the output inductor L1 the field that was building up when Q1 was on collapses, reverses polarity and now becomes the current source. This energy that has been stored in L1 now discharges via CR1. This is the same diode that was supplying current when the transformer was energized, With CR1 conducting current via L1 and transformer T1 in the off state, the amp-turns caused by CR1 in T1 must be satisfied and CR2 will conduct, This condition will continue until the current in L1 decreases to its original value as a result of energy depletion, and the cycle of operation repeats.

There are several design constraints to justify the output inductance of a continuous current output inductor.

1. Critical inductance for small size,
2. Delta current ΔI for core loss and temperature rise.
3. The LC step load filter response.
4. The closed loop stability.

The minimum or critical inductance L is calculated using $2I_{o(min)}$. This is done to insure that the current never goes to zero. When calculating the size or energy then use $I_{o(pk)}$ which is $I_{o(max)}+I_{o(min)}$.

$$L_{min} = \frac{V_o T(1 - D_{min})}{2I_{o(min)}} \quad \text{[henry]} \tag{2.28}$$

where

$$D_{min} = \frac{V_o}{V_o + v,} \tag{2.29}$$

$$ENG = \frac{LI^2_{o(pk)}}{2} \quad \text{[w -s]} \tag{2.30}$$

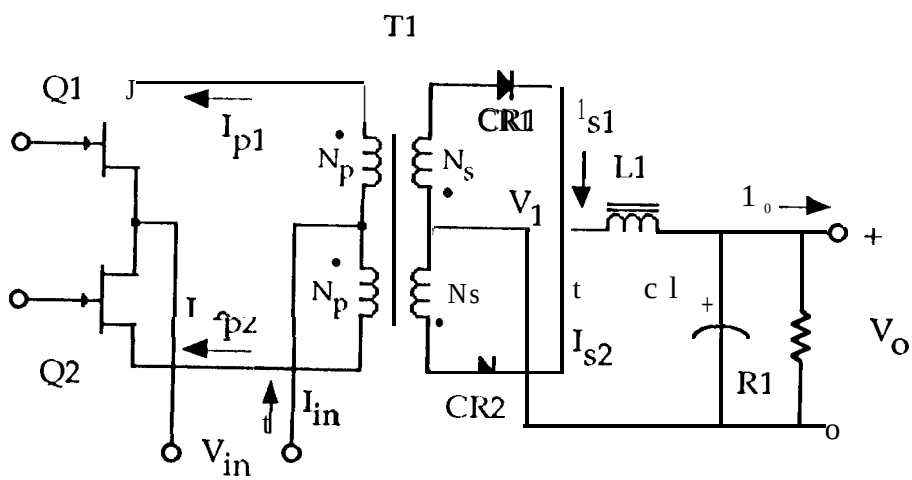

Figure 2.36 Typical buck output inductor circuit.

Output **Inductor** Voltage and Current **Waveforms**

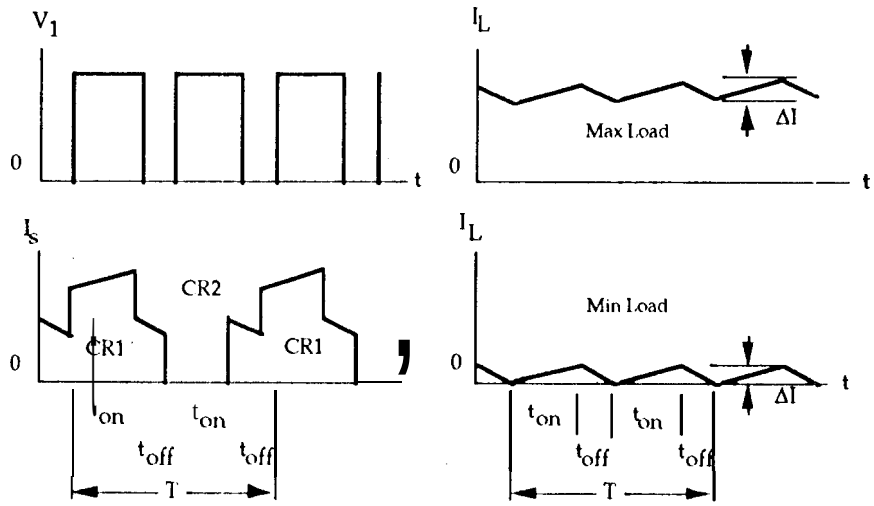

Figure 2.37 Typical buck output inductor ideal voltage and current waveforms.

References

Chapter 3

Power Magnetics Design Examples

Introduction 54
EngineeringD esignNotes 55

Power Magnetics Design Examples

301 Push-Pull Converter Design using an RM Ferrite Core 63
302 Half Bridge Converter Design using a PQ Ferrite Core 75
303 Full Bridge Converter Design using a PQ Ferrite Core 87
304 Single Ended Forward Converter Design using an ETD Ferrite Core 99
305 Two Transistor Forward Converter Design using an ETD Ferrite Core 111

306 Weinberg Converter Transformer Design using an EFD-30 Ferrite Core. 121
307 Weinberg Converter Input Inductor Design using an MIT' Powder core. 131
308 Single Ended Forward Short Circuit Mag-Amp Design using Perm 80 141
309 Single Ended Forward Reg. Only Mag-Amp Design using Metglas 2714A. 149
310 Push-Pull Converter Reg. Only Mag-Amp Design using Metglas 2714A 157

311 Input Inductor Design using an Iron Powder Core 165
312 Buck Converter Design using a Metglas Gapped Core. 171
313 Boost Converter Design Dis-Current using an EPC Ferrite Core 179
314 Inverted B/Ii Conv. Design Dis-Current using an MPP Powder Core. 189
315 Buck-Boost Isolated Design Dis-Current using an MPP Powder Core 199

316 Boost Converter Design Con-Current using a PQ Ferrite Core. 211
317 Inverted B/B Conv. Design Con-Current using a KoolMμ Powder Core. 221
318 Buck-Boost Isolated Design Con-Current using an MPP Powder Core. 231
319 Coupled Inductor Design using an MPP Powder Core 245
32(I Single Ended Forward output Filter Design using a High Flux Powder Core. . . . 255

321 Push-Pull Output Filter Design using a High Flux Powder Core. 263
322 Low Power Drive Transformer Design using a Ferrite Toroidal Core. 271
References 282

Design Examples

Introduction

The examples in this chapter are for the ease and understanding the design procedure for high frequency magnetic components for both transformers and inductors, The author did not try to optimize the magnetic material to the circuit or the circuit to the input or output voltages. The author is trying to show the engineer what is involved and what is required in a step-by-step design procedure. The examples will pick the correct wire size and the appropriate core to meet the design specification. The design examples will also calculate winding resistance, total copper loss, core loss and the combined temperature rise of the magnetic component in degrees °C. The designs shown here were taken from Chapter 2 on switching magnetics. This chapter on switching magnetics discusses the majority of the power switching topologies in their simplest form.

The examples in this chapter go a step further than in the previous chapter by designing using multiple outputs and different rectifier circuit configurations. This is done to illustrate the calculation of apparent power P_t for different transformer configurations.

The derivation for the area product A_p, core geometry Kg, and window utilization Ku is set forth in detail in the author's book, reference [1].

Engineering Design Notes

Note No. 1

Transformers and inductors with discontinuous or large ac currents operating at high frequency should use multiple strands of wire. The design examples will size the wire to minimize the skin effect. and will use the following criteria.

The skin depth γ will be the radius of the wire,

$$\gamma = \frac{6.61}{\sqrt{f}} \text{ [cm]}$$

$$\gamma = \frac{6.61}{\sqrt{50x10^3}} \text{ [cm]}$$

$$y = 0.0296 \text{ [cm]}$$

The wire area:

$$wire_A = \pi(\gamma)^2 \text{ [cm}^2\text{]}$$

$$wire_A = (3.14)(0.0296)^2 \text{[cm}^2\text{]}$$

$$wire_A = 0.00275 \text{ [cm}^2\text{]}$$

Choose a wire size with the closest area from the Wire Table 9.1.

$$AWG = \#23$$

$$A_{w(B)} = 0.00259 \text{ [cm}^2\text{]}$$

$$\mu\Omega / cm = 666$$

$$A_w = 0.00314 \text{ [cm}^2\text{] with insulation}$$

Note No. 2

If the required turns end with a fraction on the high side (and or) the wire area is on the high side then reduce the number of strands appropriately, or take the rounded high number and divide that number into the required wire area, then consult the wire table for the appropriate size,

Note No. 3

If the design wire area requirement is much smaller than the wire area selected by the minimum skin effect (),()()259 cm^2, then use the appropriate wire from the wire table.

OR

If the design wire area requirement is a little larger than the wire area selected by the minimum

skin effect 0.00259 cm^2, divide that number by two, then consult the wire table for the appropriate size. If the ac flux in an inductor is small, just select a wire from the wire table.

Note No. 4

Using the core geometry Kg designed value will provide the required regulation or copper loss called out in the requirements. To use a core geometry Kg different from the designed core geometry value will result in a higher or lower copper loss. This copper loss will either increase or decrease depending on the ratio of the designed core geometry Kg to the actual core geometry Kg. If the core selected has a larger core geometry K_g, then the copper loss will be less; if the core selected has a smaller core geometry K_g, then the copper loss will be more,

Note No. 5

Three things control the operating flux density II_m: (1) magnetic material, (2) temperature rise, and (3) circuit constraints.

Note **No. 6**

The ac flux in a normal EMI or input filter inductor is usually very low. For this reason, the ac core loss is not a major thermal consideration when designing this type of inductor.

Note No. 7

Winding a magnetic component with a large wire may become very cumbersome. It maybe wise to wind with equivalent smaller wires. For example, instead winding with a number #14, go up three wire sizes and use two number #17, or 6 wire sizes, and use 4 #20, They will give the same electrical characteristic.

Note No. 8

At this point, it is a good time to check the permeability versus the magnetizing force in oersteds to make sure the core is not being driven over the knee into saturation. If the reduction in permeability is greater than 20%, it would be wise to change the core material.

Note No, 9

This equation will yield the required core permeability. If the calculated permeability is not close to the core you are planning to use, then return to the table to select a core closer to the

calculated permeability.

Note No. 10

It is wise to minimize the gap in order to reduce the fringing flux, The gap and the flux are inversely related. Reducing the gap will increase the flux.

$$l_g = \left(\frac{0.4\pi(N)(I_{pk})X10\text{-}4}{B_m} \right)\left(\frac{MPL}{\mu_F} \right) \text{ [cm]}$$

Note **No. 11**

The use of multiple strands in continuous current inductors is dependent on the amount of ac current Al and the ease of winding.

Please see engineering design note No. 1 and 7.

Note No. 12

The use of multiple strands in discontinuous current inductors is just like a transformer; the current Al always starts at zero.

Please see engineering design note No. 1 and 7.

Note No. 13

In the boost converter configuration, the boost converter is in series with the source and only supplies a portion of the power to the load. It is difficult to meet the regulation requirement.

Note No. 14

The core geometry Kg presented in this book has been calculated with a window utilization factor Ku of 0.4. When designing with small wire, or using a small core whose bobbin winding area is small compared to the window area, the window utilization factor could be reduced to 0.32. To compensate for this loss in regulation, modify the core geometry.

$$K_g = \frac{W_a A_c^2 K_u}{MLT} \quad \text{multiply by} \quad \frac{K_{u(old)}}{K_{u(new)}} = \frac{0.4}{0.32} = 1.25$$

Note No. 15

The reason for using such a low window utilization is to be able to wind the gate winding with a single pass. This will minimize the capacitance of the gate winding and improve circuit performance.

Note No. 16

This equation will give a more accurate value for therms gate current $I_{g(rms)}$.

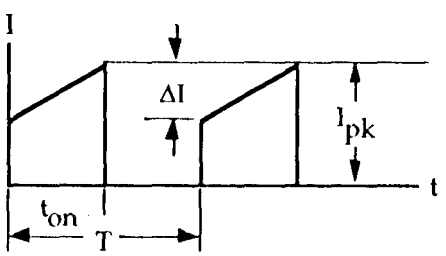

$$I_{rms(max)} = \sqrt{\left((I_{pk})^2 - (I_{pk})(\Delta I) + \frac{(\Delta I)^2}{3}\right)\frac{t_{on(max)}}{T}} \quad \text{[amps]}$$

Note No. 17

Changing the turns up or down on the reference winding provides a way to minimize the fractional turn error on the other windings.

Note No. 18

Powder cores are only available in limited value of permeability. Always select a core that is close to the designed permeability,

Note No. 19

When designing with bobbin ferrites or other small bobbin cores, the core geometry Kg is to be multiplied by 1.25. Then calculate the current density J using a window utilization factor of 0.32. This will produce the correct copper loss.

Note **No.** 20

The waveform in Figure 3.0A is a typical square wave ac current showing I_{pk} and dwell time. The maximum rms current I_{rms} for a single-winding primary or a single-winding secondary is:

$$D_{max} = \left(\frac{t_{on1(max)}}{T}\right), \quad I_{rms} = I_{pk}\sqrt{2D_{max}}, \quad 0 \le D_{max} \le \frac{1}{2}$$

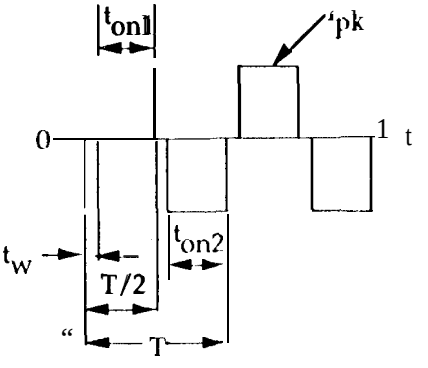

Figure 3.0A Typical ac current waveform showing peak current I_{pk} and dwell time t_W.

Note **No.** 21

The waveform in Figure 3.0B is a typical square wave dc current showing I_{pk} and dwell time. The maximum rms current I_{rms} for a center-tapped primary or center-tapped secondary is:

$$D_{max} = \left(\frac{t_{on1(max)}}{T}\right), \quad I_{rms} = I_{pk}\sqrt{D_{max}}, \quad 0 \le D_{max} \le \frac{1}{2}$$

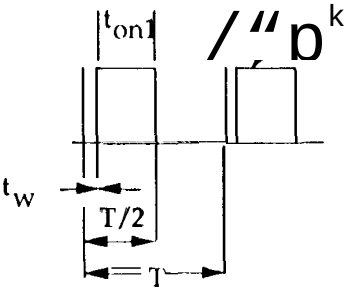

Figure **3.0B** Typical dc current waveform showing peak current I_{pk} and dwell time t_W.

Note No. 22

The waveform in Figure 3.0C is a typical secondary showing peak voltage V_{spk} and dwell time t_w. The maximum average rectified secondary voltage V_{ave} is:

$$D_{max} = \left(\frac{t_{on1(max)}}{T}\right), \; V_{ave} = V_{spk} 2D_{max} \;, \; 05 \; D_{max} \leq \frac{1}{2}$$

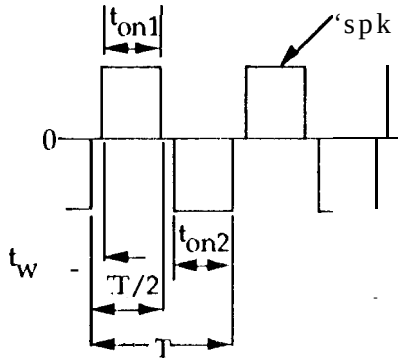

Figure 3.0C Typical ac secondary waveform showing peak voltage V_{spk} and dwell time t_w.

Note No. 23

The waveform in Figure 3.0D is a typical square wave ac current showing I_{pk} and average rectified current I_{ave}. The maximum rms current is:

$$D_{max} = \frac{t_{on1(max)}}{T}, \; I_{rms} = \frac{I_{in(ave)}}{\sqrt{2D_{max}}} \theta < \quad D_{max} \leq \frac{1}{2}$$

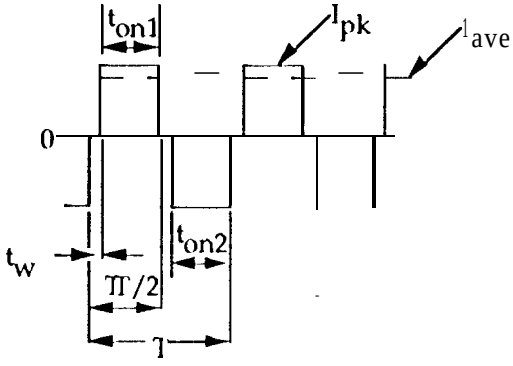

Figure 3.0D Typical a c current waveform showing peak current I_{pk} and the average rectified current.

Note No. 24

When designing low current low power drive transformers it is some times impractical to use the wire size called out by the design equations. At times, it is best to use a wire based on strength and handling capability rather than current density requirements.

Note No. 25

When designing input filters, the worst case ripple peaks when the duty ratio D = 0.5.

Note No. 26

This design philosophy was taken from reference[2].

Note No. 27

The input inductor to the Weinberg converter has two windings associated with it. When the core geometry is calculated, multiply the core geometry Kg by 2 to increase window area accordingly. Then use a window utilization Ku of 0.2 when calculating the current density J.

Note No. 28

Using a powder core with a lower permeability than the optimum permeability will result in a much larger window utilization Ku and, more than likely, a smaller wire will have to be used to achieve a workable window utilization situation. This will produce a design with more copper loss. As a result the design will be smaller but it will also have poorer regulation.

Note No. 29

This is a typical dc to dc converter operating just prior to 1'WM control. The circuit components are ideal-there are no losses. Under these conditions, the primary peak current I_{pk} is equal to the input current I_{in}. The peak secondary current I_{spk} is equal to the output current I_o.

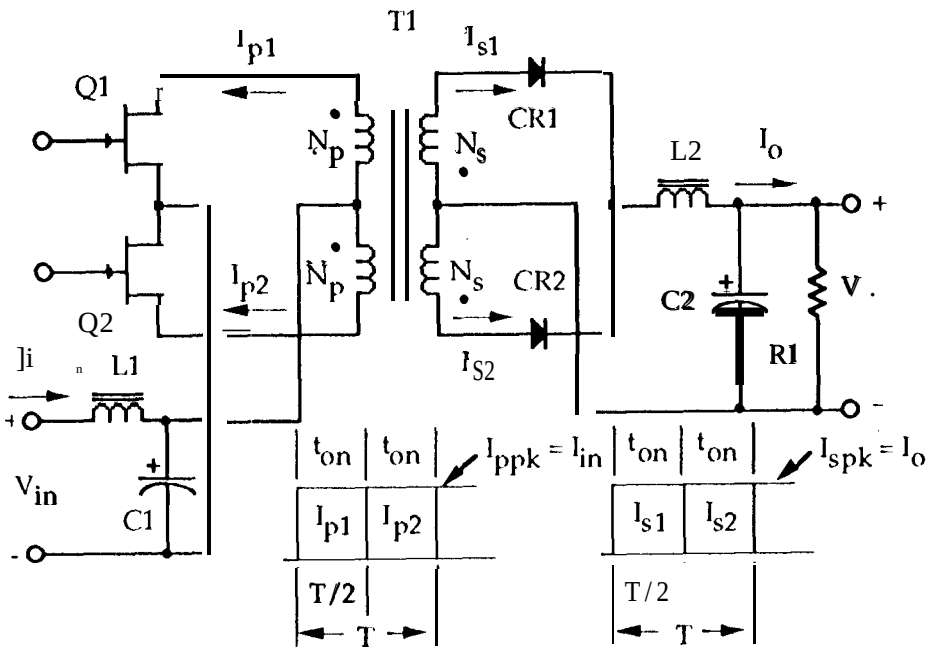

Figure 3.oE Typical push-pull dc to dc converter (50% conduction, each side).

Note No. 30

Designing inductors with a gap using ferrites cores are design the same way as inductors designed using laminations or C cores. The one disadvantage is the none uniformity of the iron area through out the magnetic path length of most cut ferrite configurations. This none uniformity of the iron area creates an error when calculating the inductance that could be as much as 2(I %. This error is introduced when calculating the fringing flux and then the required gap.

301
Push-Pull Converter Design using a Ferrite RM Core

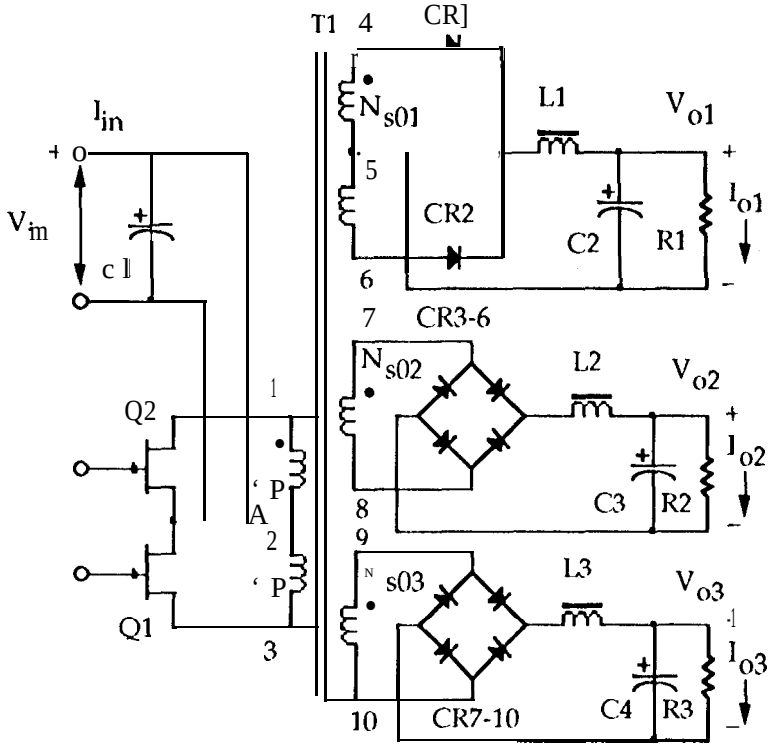

Figure 3.1 Three output push-pull converter,

Push-Pull Converter Transformer Design Specification

1. input voltage min ..... V_{min} = 22 volts
2. Output voltage (center tapped) ..... V_{o1} = 5 volts
3. Output current ..... I_{o1} = 4 amps
4. Output voltage bias (bridge) ..... V_{o2} = 12 volts
5. Output current ..... 1.2 = 0.25 amps
6. Output voltage bias (bridge) ..... $V_{o}3$ = 12 volts
7. Output current ..... I_{o3} = 0.25 amps
8. Frequency ..... f =50 kHz
9. Regulation ..... α = 0.570
10. Efficiency ..... η = 97 %
11. Total dwell time ..... t_{tw} = 1 µsec
12. Operating flux density ..... B_m = 0.11 tesla
13. Transistor on resistance ..... R_Q = 0,125 ohms
14. Diode voltage drop ..... V_d = 1.0 volt

Step No. 1 Calculate the total period, T.

$$T = \frac{1}{f} \text{ [seconds]}$$

$$T = \frac{1}{50000} \text{ [seconds]}$$

$$T = 20 \text{ [}\mu\text{sec]}$$

Step No. 2 Calculate the maximum on time, t_{on}.

$$t = \frac{T}{2} \text{ [}\mu\text{sec]}$$

$$t_{on(max)} = t - t_{tw} \text{ [}\mu\text{sec]}$$

$$t_{on(max)} = 10 - 1 \text{ [}\mu\text{sec]}$$

$$t_{on(max)} = 9 \text{ [}\mu\text{sec]}$$

Step No. 3 Calculate the maximum on duty ratio, D_{max}.

$$D_{max} = \frac{t_{on(max)}}{t}$$

$$D_{max} = \frac{9.0}{20}$$

$$D_{max} = 0.45$$

Step No. 4 Calculate the maximum apparent secondary power, P_{ts}.

$$P_o = I_o(V_o + V_d)\sqrt{2} \text{ [watts] tapped winding}$$

$$P_o = I_o(V_o + V_d) \text{ [watts] single winding}$$

$$P_{tso1} = (4)(5 + 1)(1.41) = 33.8 \text{ [watts]}$$

$$P_{tso2} = (0.25)(12+2) = 3.5 \text{ [watts]}$$

$$P_{tso3} = (0.25)(12 + 2) = 3.5 \text{ [watts]}$$

$$P_{ts} = P_{tso1} + P_{tso2} + P_{tso3} \text{ [watts]}$$

$$P_{ts} = (33.8) + (3.5) + (3.5) = 40.8 \text{ [watts]}$$

Step No. 5 Calculate the apparent power, Pt.

$$P_t = P_{ts}\left[\frac{\sqrt{2}}{\eta} + 1\right] \text{ [watts]}$$

$$P_t = 40.8\left(\frac{1,41}{0.97} + 1\right) \text{ [watts]}$$

$$P_t = 100 \text{ [watts]}$$

Step No. 6 Calculate the electrical conditions, K_e.

$$K_e = 0.145\left(K_f\right)^2\left(f\right)^2\left(B_m\right)^2 x10^{-4}$$

$$K_e = (0.145\ )(4.0)2(50000)2(0.11)2X10\text{-}4$$

$$K_e = 7018$$

Step No. 7 Calculate the core geometry, Kg.

$$Kg = \frac{P_t}{2K_e\alpha} \text{ [cm']}$$

$$\text{'g} = \frac{\text{'(loo)}}{2(7018)(0.5)} \text{ 'cm,]}$$

$$K_g = 0.0142 \text{ [cm}^5\text{]}$$

$$Kg = (0.0142)(1.25) = 0.0177 \text{ [cm}^5\text{]}$$

See Engineering Design Note No. 4 and 19.

Step No. 8 Select from Table 4.2 an RM core comparable in core geometry K_g.

Core number	RM-42316
Manufacturer	Magnetics Inc.
Magnetic material	P, μ_i = 2500
Magnetic path length	MPL = 3.80 cm
Window height	G = 1.074 cm
Core weight	W_{tfe} = 13.0 grams
Copper weight	Wt_{cu} = 6,73 grams
Mean length turn	MLT = 4.17 cm
Iron area	A_c = 0.640 cm^2
Window area	Wa = 0.454 cm^2
Area product	A_p = 0.290 cm^4
Core geometry	Kg= 0.0178 cm^5
Surface area	At= 20.2 cm^2
Millihenrys per 1000 turns	mh = 2200

Step No, 9 Calculate the total secondary load power, P_{to}.

$$PO = I_o(V_o + V_d) \text{ [watts]}$$
$$P_{o1} = (4)(5+1) \text{ [watts]}$$
$$P_{o2} = (0.25)(12+2) \text{ [watts]}$$
$$P_{o3} = (0.25)(12+2) \text{ [watts]}$$
$$J',. = P_{o1} + P_{o2} + P_{o3} \text{ [watts]}$$
$$P_{to} = (24) + (3,5) + (3.5) \text{ [watts]}$$
$$P_{to} = 31 \text{ [watts]}$$

Step No. 10 Calculate the current density J using a window utilization, Ku = 0.32.

$$J = \frac{P_t x10^4}{K_f K_u B_m f A_p} \text{ [amps / cm}^2\text{]}$$
$$J = \frac{(1\ 00)X10'}{(4.0)(0.32)(0.11)(50000)(0.290)} \text{[amps , cm}^2\text{]}$$
$$J = 490 \text{ [amps/ cm}^2\text{]}$$

Step No. 11 Calculate the average primary current, I_{in}.

$$I_{in} = \frac{P_{to}}{V_{in}\eta} \text{ [amps]}$$
$$I_{in} = \frac{31}{(22)(0.97)} \text{ [amps]}$$
$$I_{in} = 1.45 \text{ [amps]}$$

Step No. 12 Calculate the peak primary current, I_{pk}.

$$I_{pk} = \frac{I_{in}}{2D_{max}} \text{ [amps]}$$
$$I_{pk} = \frac{1.45}{0.9} \text{ [amps]}$$
$$I_{pk} = 1,61 \text{ [amps]}$$

Step No. 13 Calculate the average primary voltage, V_p.

$$V_p = (V_{in})(2D_{max}) - (I_p R_Q) \text{ [volts]}$$
$$V_p = (22)(0.9) - (1.\ 45)(0.125) \text{ [volts]}$$
$$V_p = 19.62 \text{ [volts]}$$

Step No. 14 Calculate the primary turns, N_p.

$$N_p = \frac{V_p x 1\ 0^4}{K_f B_m f A_c} \quad [\text{turns}]$$

$$N_p = \frac{(19.62)x10^4}{(4.0)(0.11)(50000)(0.640)} \quad [\text{turns}]$$

$$N_p = 13.9 \text{ use } N_p = 14 \quad [\text{turns}]$$

See Engineering Design Note No. 2.

Step No. 15 Calculate the primary wire area A_{wp}. Using a center tap winding the current is multiplied the square root of the duty ratio, $\sqrt{D_{max}}$.

$$A_{wp} = \frac{I_{pk}\sqrt{D_{max}}}{J} \quad [\text{cm}^2]$$

$$A_{wp} = \frac{1.53(0.671)}{490} \quad [\text{cm}^2]$$

$$A_{wp} = 0.00210 \quad [\text{cm}^2]$$

Step No. 16 Calculate the skin depth y. The skin depth will be the radius of the wire.

$$\gamma = \frac{6.62}{\sqrt{f}} \quad [\text{cm}]$$

$$\gamma = \frac{6.62}{\sqrt{50x10^3}} \quad [\text{cm}]$$

$$\gamma = 0.0296 \quad [\text{cm}]$$

See Engineering Design Note No. 1.

Step No. 17 Calculate the wire area.

$$wire_A = \pi(\gamma)^2 \quad [\text{cm}^2]$$

$$wire_A = (3.14)(0.0296)^2 \quad [\text{cm}^2]$$

$$wire_A = 0.00275 \quad [\text{cm}^2]$$

Step No. 18 Select a wire size with the required area from the wire Table 9.1. If the area is not within 10% of the required area, then go to the next smallest size.

$$AWG = \#23$$

$$A_{w(B)} = 0.00259 \quad [\text{cm}^2]$$

$$\mu\Omega / cm = 666$$

$$Au, = 0.00314 \quad [\text{cm}^2] \text{ with insulation}$$

See Engineering Design Note No. 3.

Step No. 19 Select a wire size with the required area from the wire Table 9.1. If the area is not within 10% of the required area, then go to the next smallest size.

$$AWG = \#24$$
$$A_{w(B)} = 0.00205 \ [cm^2]$$
$$\mu\Omega / cm = 842$$

See Engineering Design Note No. 3.

Step No. 20 Calculate the primary winding resistance, R_p.

$$R_p = MLT(N_p)\left(\frac{\mu\Omega}{cm}\right)x10^{-6} \ [ohms]$$
$$R_p = 4.17(14)(842)x10+ \ [ohms]$$
$$R_p = 0.0492 \ [ohms]$$

Step No. 21 Calculate the primary copper loss, P_p.

$$P_p = \left(I_{pk}\sqrt{2D_{max}}\right)^2 R \ [watts]$$
$$P_p = (1.53)^2(.0492) \ [watts]$$
$$P_p = 0.115 \ [watts]$$

Step No. 22 Calculate the secondary turns, N_{s01}, each side of center tap.

$$N_{s01} = \frac{N_p(V_{01} + V_d)}{V_p}\left(1 + \frac{\alpha}{100}\right) \ [turns]$$
$$N_{s01} = \frac{14(5+1)}{19.62}\left(1 + \frac{0.5}{100}\right) \ [turns]$$
$$N_{s01} = 4.30 \ [turns]$$
$$\text{use } N_{s01} = 4 \ [turns]$$

See Engineering Design Note No. 2.

Step No. 23 Calculate the secondary wire area A_{ws01}. Because of the center tap winding the current is multiplied by the square root of the duty ratio, D_{max}.

$$A_{ws01} = \frac{I_{s01}\sqrt{D_{max}}}{J} \ [cm^2]$$
$$A_{w01} = \frac{4.0(0.671)}{490} \ [cm^2]$$
$$A_{ws01} = 0.00548 \ [cm^2]$$

Step No. 24 Calculate the required number of strands. S_{ns01}. and the $\mu\Omega/cm$.

$$S_{ns01} = \frac{A_{ws01}}{\#23} = \frac{(0,00548)}{(0.00259)} = 2.11 \text{ use } 2$$

$$(new)\mu\Omega / cm = \frac{\mu\Omega / cm}{S_{ns01}} = \frac{666}{2} = 333$$

See Engineering Design Note No. 2.

Step No. 25 Calculate the secondary winding resistance, R_{s01}.

$$R_{s01} = MLT(N_{s01})\left(\frac{\mu\Omega}{cm}\right) x10^{-6} \text{ [ohms]}$$

$$R_{s01} = 4.17(4)(333)X10\text{-}6 \text{ [ohms]}$$

$$R_{s01} = 0.00555 \text{ [ohms]}$$

Step No. 26 Calculate the secondary copper loss, P_{s01}.

$$P_{s01} = I_{s01}^2 R \text{ [watts]}$$

$$P_{s01} = (4.0)^2(.00555) \text{ [watts]}$$

$$P_{s01} = 0.0889 \text{ [watts]}$$

Step No. 27 Calculate the secondary turns, N_{s02}.

$$N_{s02} = \frac{N_p(V_{02} + 2V_d)}{V_p}\left(1 + \frac{\alpha}{100}\right) \text{ [turns]}$$

$$N_{s02} = \frac{14(12 + 2)}{19.62}\left(1 + \frac{0.5}{100}\right) \text{ [turns]}$$

$$N_{s02} = 10.04 \text{ [turns]}$$

$$\text{use } N_{s02} = 10 \text{ [turns]}$$

See Engineering Design Note No. 2.

Step No. 28 Calculate the secondary wire area, A_{ws02}.

$$A_{ws02} = \frac{I_{s02}}{J} \text{ [cm']}$$

$$A_{ws02} = \frac{0.25}{490} \text{ [cm']}$$

$$A_{ws02} = 0.000510 \text{ [cm}^2\text{]}$$

See Engineering Design Note No. 3.

Step No. 29 Select a wire size with the required area from the wire Table 9.1. If the area is not within 10% of the required area, then go to the next smallest size,

$$AWG = \#30$$
$$A_{w(B)} = 0.0005067 \ [cm^2]$$
$$\mu\Omega / cm = 3402$$

Step No. 30 Calculate the secondary winding resistance, R_{s02}.

$$R_{s02} = MLT(N_{s02})\left(\frac{\mu\Omega}{cm}\right) x10^{-6} \ [ohm]$$
$$R_{s02} = 4,17(10)(3402)x10\text{-}G \ [ohms]$$
$$R_{s02} = 0.142 \ [ohms]$$

Step No. 31 Calculate the secondary copper loss, P_{s02}.

$$P_{s02} = I_{s02}^2 R \ [watts]$$
$$P_{s02} = (0.25)^2(.142) \ [watts]$$
$$P_{s02} = 0.00887 \ [watts]$$

Step No. 32 Calculate the secondary turns, N_{s03}.

$$N_{s03} = \frac{N_p(V_{03} + 2V_d)}{V_p}\left(1 + \frac{\alpha}{100}\right) [turns]$$
$$N_{S03} = \frac{14(12 + 2)}{19.62}\left(1 + \frac{0.5}{100}\right) [turns]$$
$$N_{s03} = 10.04 \ [turns]$$
$$\text{use } N_{s03} = 10 \ [turns]$$

See Engineering Design Note No. 2.

Step No. 33 Calculate the secondary wire area, A_{ws03}.

$$A_{ws03} = \frac{I_{s03}}{J} \ [cm^2]$$
$$A_{w03} = \frac{0.25}{490} \ [cm^2]$$
$$A_{ws03} = 0.000510 \ [cm^2]$$

See Engineering Design Note No. 3.

Step No. 34 Select a wire size with the required area from the wire Table 9.1. If the area is not within 10% of the required area, then go to the next smallest size.

$$AWG = \#30$$

$$A_{w(B)} = 0.0005067 \text{ [cm*]}$$

$$\mu\Omega / cm = 3402$$

Step No. 35 Calculate the secondary winding resistance, R_{s03}.

$$R_{S03} = MLT(N_{s03})\left(\frac{\mu\Omega}{cm}\right) \times 10^{-6} \text{ [ohms]}$$

$$R_{s03} = 4{,}17(10)(3420)x10\text{-}f \text{ [ohms]}$$

$$R_{s03} = 0.142 \text{ [ohms]}$$

Step No. 36 Calculate the secondary copper 10SS, P_{s03}.

$$P_{s03} = I_{s03}^2 R \text{ [watts]}$$

$$P_{s03} = (0.25)^2(.142) \text{ [watts]}$$

$$P_{s03} = 0.00887 \text{ [watts]}$$

Step No. 37 Calculate the window utilization, Ku.

$$\text{[turns]} = 2(N_p S_{np}) = 2(14) = 28 \text{ [primary]}$$

$$\text{[turns]} = 2(N_{s01} S_{ns01}) = 2(8) = 16 \text{ [secondary]}$$

$$\text{[turns]} = (N_{s02} S_{ns02}) = (10) \text{ [secondary]}$$

$$\text{[turns]} = (N_{s03} S_{ns03}) = (10) \text{ [secondary]}$$

$$N_{\#24} = 28 \text{ turns, } \#24$$

$$N_{\#23} = 16 \text{ turns, } \#23$$

$$N_{\#30} = 20 \text{ turns, } \#30$$

$$K_u = \frac{N_{\#24}A_w + N_{\#23}A_w + N_{\#30}A_w}{W_a}$$

$$K_u = \frac{(28)(0.00205) + (16)(0.00259) + (20)(0.000470)}{(0.454)}$$

$$K_u = 0.238$$

Step No. 38 Calculate the total copper loss, I'$_{cu}$.

$$P_{cu} = P_p + P_{s01} + P_{s02} + P_{s03} \text{ [watts]}$$
$$P_{cu} = (0.115) + (0.0889) + (0.0087) + (0.0087) \text{ [watts]}$$
$$P_{cu} = 0.221 \text{ [watts]}$$

Step No. 39 Calculate the regulation α for this design,

$$\alpha = \frac{P_{cu}}{P_o} x100 \text{ [\%]}$$
$$\alpha = \frac{(0.221)}{(31)} x100 \text{ [\%]}$$
$$a = 0.714 \text{ [\%]}$$

Step No. 40 Calculate the flux density, B_m.

$$B_m = \frac{VPX104}{K_f f A_c N_p} \text{ [tesla]}$$
$$B_m = \frac{(19.62)x10^4}{(4.0)(50000)(0.640)(14)} \text{ [tesla]}$$
$$B_m = 0.109 \text{ [tesla]}$$

Step No. 41 Calculate the watts per kilogram WK using P material Figure 4.1.

$$WK = 3.18x10^{-4}(f)^{(1.51)}(B_{ac})^{(2.747)} \text{ [watts/kilogram]}$$
$$WK = 3.18x10^{-4}(50000)^{(1.51)}(0.109)^{(2.747)} \text{ [watts/ kilogram]}$$
$$WK = 8.99 \text{ [watts/ kilogram]}$$

Step No. 42 Calculate the core 10SS, P_{fe}.

$$P_{fe} = \left(\frac{\text{milliwatts}}{\text{gram}}\right) WY,X10\text{-}3 \text{ [watts]}$$
$$P_{fe} = (8.99)(13)x10\text{-}3 \text{ [watts]}$$
$$P_{fe} = 0.117 \text{ [watts]}$$

Step No. 43 Calculate the total loss, core P_{fe} and copper P_{cu}, in watts P_{Σ}.

$$P_{\Sigma} = P_{fe} + P_{cu} \quad \text{[watts]}$$
$$P_{\Sigma} = (0.117) + (0.221) \quad \text{[watts]}$$
$$P_{\Sigma} = 0.338 \quad \text{[watts]}$$

Step No. 44 Calculate the watt density, λ.

$$\lambda = \frac{P_{\Sigma}}{A_t} \quad \text{[watts/ cm}^2\text{]}$$
$$\lambda = \frac{0.338}{20.2} \quad \text{[watts/ cm'}$$
$$\lambda = 0.0167 \quad \text{[watts/cm']}$$

Step No, 45 Calculate the temperature rise in degrees C.

$$T_r = 450(\lambda)^{(0.826)} \quad \text{[degrees C]}$$
$$T_r = 450(0.0173)^{(0.826)} \quad \text{[degrees C]}$$
$$T_r = 15.3 \quad \text{[degrees C]}$$

Design Summary

Core Part Number	RM-42316
Magnetic Material	1' Ferrite
Frequency	50kHz
Flux Density	0.109 T
Core Loss	0.117 W
Permeability	2500
Millihenrys per 1K Turns	2200
Winctow Utilization Ku	0.238

Winding Number	1	2	3	4
AWG	24	23	30	3(I
Strands	1	2	1	1
Total Turns	28	8	10	10
Taps	Center	Center	None	None
Resistance	0.0492	0.00555	0.142	0.142
Copper l ,0ss	0.115 w	0.0889 w	0.00887 w	0.00887 w

Engineering Notes

Half Bridge Converter Design using a Ferrite PQ Core

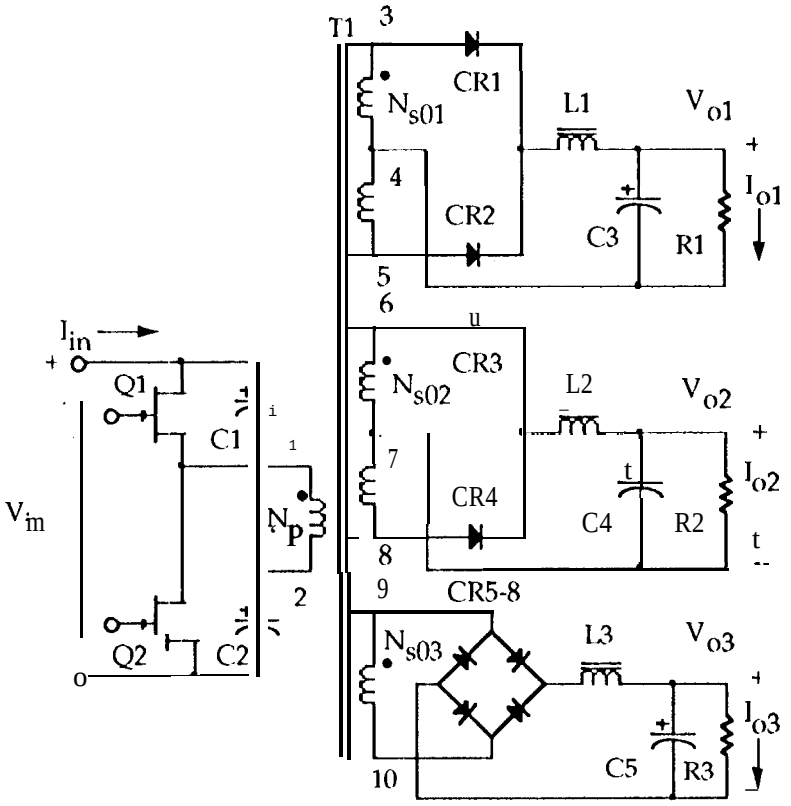

Figure 3.2 Three output half bridge converter.

Half Bridge Converter Transformer **Design** Specification

1.	Input voltage rnin	V_{min} = 150 volts
2.	Output voltage (center tapped)	V_{o1} = 5 volts
3.	Output current	I_{o1} = 2.0 amps
4.	Output voltage (center tapped)	V_{o2} = 28 volts
5.	Output current bias	I_{o2} = 1.0 amps
6.	Output voltage bias (bridge)	V_{o3} = 12 volts
7.	Output current bias	I_{o3} = 0.5 amps
8.	Frequency	f = 50 kHz
9.	Regulation	α = 0.570
10.	Efficiency	η = 95 %
11.	Total dwell time	$\tau_{\tau\omega}$ = 1 µsec
12.	Operating flux density	B_m = 0.15 tesla
13.	Transistor on resistance	R_Q = 0.8 ohms
14.	Diode voltage drop	V_d = 1.0 volt

0

Step No. 1 Calculate the total period, T.

$$T = \frac{1}{f} \quad \text{[seconds]}$$

$$T = \frac{1}{50000} \quad \text{[seconds]}$$

$$T = 20 \ [\mu\text{sec}]$$

Step No. 2 Calculate the maximum on time, t_{on}.

$$f = \frac{T}{2} \ [\mu\text{sec}]$$

$$t_{on(max)} = f - t_{tw} \ [\mu\text{sec}]$$

$$f_{on(max)} = 10 - 1 \ [\mu\text{sec}]$$

$$f_{on(max)} = 9 \ [\mu\text{sec}]$$

Step No.3 Calculate the maximum on duty ratio, D_{max}.

$$D_{max} = \frac{t_{on(max)}}{t}$$

$$D_{max} = \frac{9.0}{20}$$

$$D_{max} = 0{,}45$$

Step No. 4 Calculate the maximum apparent secondary power, P_{ts}.

$$P_o = I_o(V_o - t\ V_d)\sqrt{2} \quad \text{[watts] tapped winding}$$

$$P_o = I_o(V_o + V_d) \quad \text{[watts] single winding}$$

$$P_{tso1} = (2)(5+1)(1.41) = -16.9 \ \text{[watts]}$$

$$P_{tso2} = (1)(28+1)(1.41) = 40.9 \ \text{[watts]}$$

$$P_{tso3} = (0.5)(12+2) = 7.0 \ \text{[watts]}$$

$$P_{ts} = P_{tso1} + P_{tso2} + P_{tso3} \ \text{[watts]}$$

$$P_{ts} = (16.9) + (40.9) + (7{,}0) = 64{,}8 \ \text{[watts]}$$

Step No. 5 Calculate the apparent power, P_t.

$$P_t = P_{ts}\left(\frac{1}{\eta} + 1\right) \quad \text{[watts]}$$

$$P_t = 64.8\left(\frac{1}{0.95} + 1\right) \quad \text{[watts]}$$

$$P_t = 133 \quad \text{[watts]}$$

Step No. 6 Calculate the electrical conditions, K_e.

$$K_e = 0.145(K_f)^2(f)^2(B_m)^2 \times 10^{-4}$$

$$K_e = (0.145)(4.0)^2(50000)^2(0.15)^2 \times 10^{-4}$$

$$K_e = 13050$$

Step No. 7 Calculate the core geometry, K_g.

$$K_g = \frac{P_t}{2K_e\alpha} \quad \text{[cm}^5\text{]}$$

$$K_g = \frac{(133)}{2(13050)(0.5)} \quad \text{[cm}^5\text{]}$$

$$K_g = 0.0102 \quad \text{[cm}^5\text{]}$$

$$K_g = (0.0102)(1.25) = 0.0128 \quad \text{[cm}^5\text{]}$$

See Engineering Design Note No. 4 and 19.

Step No, 8 Select from Table 4.3a PQ core comparable in core geometry K_g.

Core number	PQ-42016
Manufacturer	Magnetics Inc.
Magnetic material	P, μ_i = 2500
Magnetic path length	MPL = 3.74 cm
Window height	G = 1.00 cm
Core weight	Wtfe = 13.0 grams
Copper weight	Wt_{cu} = 6.62 grams
Mean length turn	MLT = 4.34 cm
Iron area	A_c = 0.58 cm^2
Window area	W_a = 0.428 cm^2
Area product	A_p = 0.248 cm^4
Core geometry	Kg= 0.0133 cm^5
Surface area	At= 17.4 cm^2
Millihenrys per 1000 turns	mh = 2930

Step No. 9 Calculate the total secondary load power, P_{to}.

$$P_o = I_o(V_o + V_d) \text{ [watts]}$$
$$P_{o1} = (2)(5+1) \text{ [watts]}$$
$$P_{o2} = (1)(28+-1) \text{ [watts]}$$
$$P_{o3} = (0.5)(12+2) \text{ [watts]}$$
$$P_{to} = P_{o1} + P_{o2} + P_{o3} \text{ [watts]}$$
$$P_{to} = (12)+ (29)+ (7.0) \text{ [watts]}$$
$$P_{to} = 48 \text{ [watts]}$$

Step No. 10 Calculate the average primary current, I_{in}. Because this a half bridge the input current is multiplied by 2.

$$I_{in} = \frac{P_{to}}{V_p \eta} \text{ [amps]}$$
$$I_{in} = \frac{48}{(150)(0.95)} \text{ [amps]}$$
$$I_{in} = 0.337 \text{ [amps]}$$
$$I_p = 2I_{in} = 0.674 \text{ [amps]}$$

Step No. 11 Calculate the average primary voltage, V_p. Because this a half bridge the input voltage is divided by 2.

$$V_p = \left(\frac{V_{in}}{2}\right)(2D_{max}) - (I_p R_Q) \text{ [volts]}$$
$$V_p = (75)(0.9) - (0.674)(0.8) \text{ [volts]}$$
$$V_p = 66.9 \text{ [volts]}$$

See engineering Design Note No. 23.

Step No. 12 Calculate the primary turns, N_p.

$$N_p = \frac{VPX104}{K_f B_m f A_c} \text{ turns]}$$
$$N_p = \frac{(66.9)\text{x}10^4}{(4.0)(0.15)(50000)(0.580)} \text{ [turf, s]}$$
$$N_p = 38.4 \text{ [turns]}$$
$$\text{use } N_p = 38 \text{ [turns]}$$

See Engineering Design Note No. 2.

Step No. 13 Calculate the current density J using a window utilization, $K_u = 0.32$.

$$J = \frac{P_t x10^4}{K_f K_u B_m f A_p} \quad [\text{amps / cm}']$$

$$J = \frac{(133)X10^4}{(4.0)(0.32)(0.15)(50000)(0.248)} [\text{amps / cm}']$$

$$J = 559 \quad [\text{amps/ cm}']$$

Step No. 14 Calculate the primary rms current, $I_{p(rms)}$.

$$I_{p(rms)} = \frac{I_p}{\sqrt{2D_{max}}} [\text{amps}]$$

$$I_{p(rms)} = \frac{0.674}{(0.949)} [\text{amps}]$$

$$I_{p(rms)} = 0.710 \quad [\text{amps}]$$

See Engineering Design Note No. 23.

Step No. 15 Calculate the primary wire area, A_{wp}.

$$A_{wp} = \frac{I_{p(rms)}}{J} \quad [\text{cm}']$$

$$A_{wp} = \frac{0.710}{559} \quad [\text{cm}']$$

$$A_{wp} = 0.00127 \quad [\text{cm}']$$

Step No. 16 Calculate the skin depth y. The skin depth will be the radius of the wire.

$$\gamma = \frac{6.62}{\sqrt{f}} \quad [\text{cm}]$$

$$\gamma = \frac{6.62}{\sqrt{50x10^3}} \quad [\text{cm}]$$

$$y = 0.0296 \quad [\text{cm}]$$

See Engineering Design Note No. 1.

Step No. 17 Calculate the wire area.

$$wire_A = \pi(\gamma)^2 \quad [\text{cm}^2]$$

$$wire_A = (3,14)(0.0296)^2 [\text{cm}']$$

$$wire_A = 0.00275 \quad [\text{cm}']$$

Step No. 18 Select a wire size with the required area from the wire Table 9.1. If the area is not within 10% of the required area, then go to the next smallest size.

$$AWG = \#23$$
$$A_{w(B)} = 0.00259 \ [cm^2]$$
$$\mu\Omega / cm = 666$$
$$A_{w(I)} = 0.00314 \ [cm^2] \text{ with insulation}$$

See Engineering Note Design No. 3.

Step No. 19 Select a wire size with the required area from the wire Table 9.1,

$$A_{wp} = 0.00127 \ [cm^*]$$
$$AWG \ \#26$$
$$A_{w(B)} = 0.00128 \ [cm']$$
$$\mu\Omega / cm = 1345$$

Step No. 2(I Calculate the primary winding resistance, R_p.

$$R_p = MLT(N_p)\left(\frac{\mu\Omega}{cm}\right)x10^{-6} \ [\text{ohms}]$$
$$R_p = 4{,}34 \ (38)(1345)x10\text{-}G \ [\text{ohms}]$$
$$R_p = 0.222 \ [\text{ohms}]$$

Step No. 21 Calculate the primary copper loss, P_p.

$$P_p = I^2_{p(rms)} R_p \ [\text{watts}]$$
$$P_p = (0.710)^2(.222) \ [\text{watts}]$$
$$P_p = 0.112 \ [\text{watts}]$$

Step No. 22 Calculate the secondary turns, N_{S01}, each side of center tap.

$$N_{S0F} = \frac{N_p(V_{01} + V_d)}{v_{,,}} \left(1 + \frac{\alpha}{100}\right) [\text{turns}]$$
$$N_{,ol} = \frac{38(5 + 1)}{66.9} \left(1 + \frac{0.5}{100}\right) [\text{turns}]$$
$$N_{s01} = 3{,}43 \ [\text{turns}]$$
$$\text{use } N_{s01} = 4 \ [\text{turns}]$$

See Engineering Design Note No. 2.

Step No. 23 Calculate the secondary wire area A_{ws01}. Because of the center tap winding the current is multiplied the square root of the duty ratio, $\sqrt{D_{max}}$.

$$A_{ws01} = \frac{I_{s01}\sqrt{D_{max}}}{J} \quad [cm^2]$$

$$A_{ws01} = \frac{2.0(0.671)}{559} \quad [cm^2]$$

$$A_{ws01} = 0.00240 \quad [cm']$$

Step No. 24 Calculate the required number of strands, S_{ns01}, and the $\mu\Omega/cm$.

$$S_{ns01} = \frac{A_{ws01}}{wire_{A\#23}}$$

$$S_{ns01} = \frac{(0.00240)}{(0.00259)} = 0.93 \text{ use } 1$$

$$\mu\Omega / cm = 666$$

See Engineering Design Note No. 2.

Step No. 25 Calculate the secondary winding resistance, R_{s01}.

$$R_{s01} = MLT(N_{s01})\left(\frac{\mu\Omega}{cm}\right) X1 \; O\text{-}' \; [ohms]$$

$$R_{s01} = 4.34(4)(666)x10\text{-}' \; [ohms]$$

$$R_{s01} = 0{,}0116 \; [ohms]$$

Step No. 26 Calculate the secondary copper loss, P_{s01}.

$$P_{s01} = I_{s01}^2 R \quad [watts]$$

$$P_{s01} = (2{,}0)^2(.0116) \quad [watts]$$

$$P_{s01} = 0.0464 \quad [watts]$$

Step No. 27 Calculate the secondary turns, N_{s02}, each side of center tap.

$$N_{so'} = \frac{N_p(V_{02} + V_d)}{V_p}\left(1 + \frac{\alpha}{100}\right) \quad [turns]$$

$$N_{S02} = \frac{38(28+1)}{66.9}\left(1 + \frac{0.5}{100}\right) \quad [turns]$$

$$N_{s02} = 16.55 \quad [turns]$$

$$\text{use } N_{s02} = 17 \quad [turns]$$

See Engineering Design Note No. 2.

Step No. 28 Calculate the secondary wire area, A_{ws02}. Using a center tap winding the current is multiplied the square root of the duty ratio $\sqrt{D_{max}}$.

$$A_{ws02} = \frac{I_{s02}\sqrt{D_{max}}}{J} \text{ [cm}^2\text{]}$$

$$A_{W02} = \frac{1.0(0.671)}{559} \text{ [cm}^2\text{]}$$

$$A_{ws02} = 0.00120 \text{ [cm}^2\text{]}$$

See Engineering Design Note No. 3.

Step No. 29 Select a wire size with the required area from the wire Table 9.1. If the area is not within 10% of the required area, then go to the next smallest size and record the resistance in $\mu\Omega/cm$.

$$A_{w02} = 0.00120 \text{ [cm}^2\text{]}$$

$$AWG\ \#26$$

$$A_{w(B)} = 0.00128 \text{ [cm']}$$

$$\mu\Omega/cm = 1345$$

Step No. 30 Calculate the secondary winding resistance, R_{s02}.

$$R_{s02} = MLT(N_{s02})\left(\frac{\mu\Omega}{cm}\right)x10^{-6} \text{ [ohms]}$$

$$R_{s02} = 4.34\ (17)(1345)x10\text{-G [ohms]}$$

$$R_{s02} = 0.0992 \text{ [ohms]}$$

Step No. 31 Calculate the secondary copper 10SS, P_{s02}.

$$P_{s02} = I_{s02}^2 R_{s02} \text{ [watts]}$$

$$P_{s02} = (1.0)^2(.0992) \text{ [watts]}$$

$$P_{s02} = 0.0992 \text{ [watts]}$$

Step No. 32 Calculate the secondary turns, N_{s03}.

$$N_{S03} = \frac{N_p(V_{03} + 2V_d)}{V_p}\left(1 + \frac{}{100}\right) \text{ [turns]}$$

$$N_{S03} = \frac{38(12+2)}{66.9}\left(1 + \frac{0.5}{100}\right) \text{ [turns]}$$

$$N_{s03} = 7{,}99 \text{ use } N_{s03} = 8 \text{ [turns]}$$

See Engineering Design Note No. 2.

Step No. 33 Calculate the secondary wire area, A_{ws03}.

$$A_{ws03} = \frac{I_{s03}}{J} \quad [\text{cm}^2]$$

$$A_{w03} = \frac{0.5}{559} \quad [\text{cm}']$$

$$A_{ws03} = 0.000890 \quad [\text{cm}']$$

See Engineering Design Note No. 3.

Step No. 34 Select a wire size with the required area from the wire Table 9.1

$$A_{w03} = 0.000888 \ [\text{cm}^2]$$

$$AWG \# 28$$

$$A_{w(B)} = 0.000805 \ [\text{cm}']$$

$$\mu\Omega \ /\text{Cm} = 2143$$

Step No. 35 Calculate the secondary winding resistance, R_{s03}.

$$R_{s03} = MLT(N_{s03})\left(\frac{\mu\Omega}{cm}\right) \text{x}1\ 0^{-6} \ [\text{ohms}]$$

$$R_{s03} = 4.34(\ 8)(2143)\text{x}10\text{-}6 \ [\text{ohms}]$$

$$R_{s03} = 0.0744 \ [\text{ohms}]$$

Step No. 36 Calculate the secondary copper loss, P_{s03}.

$$P_{s03} = I_{s03}^2 R_{s03} \ [\text{watts}]$$

$$P_{s03} = (0.5)^2(.0744) \ [\text{watts}]$$

$$P_{s03} = 0.0186 \ [\text{watts}]$$

Step No. 37 Calculate the window utilization, K_u.

$$A_{wt} = NS_{ns}(A_w) \ [cm']$$

$$A_{wtp} = (38)(1)(0.00128) = 0.0486 \ [\text{cm}^2]$$

$$A_{wts1} = 2(4)(1)(0.00259) = 0.0207 \ [\text{cm}^2]$$

$$A_{wts2} = 2(17)(1)(0.00128) = 0.0435 \ [\text{cm}']$$

$$A_{wts3} = (8)(1)(0.000805) = 0.00644 \ [\text{cm}']$$

$$A_{wt} = (0.0486) + (0.0207) + (0.0435) + (0.00644) \ [\text{cm}^2]$$

$$K_u = \frac{A_{wt}}{W^*} = \frac{0.119}{0.428} = 0.278$$

Step No. 38 Calculate the total copper loss, P_{cu}.

$$P_{cu} = P_p + P_{s01} + P_{s02} + P_{s03} \text{ [watts]}$$
$$P_{cu} = (0.112) + (0.0462) + (0.0992) + (0.0186) \text{ [watts]}$$
$$P_{cu} = 0.276 \text{ [watts]}$$

Step No. 39 Calculate the regulation a for this design.

$$\alpha = \frac{P_{cu}}{P_{ac}} \times 100 \text{ [\%]}$$
$$\alpha = \frac{(0.276)}{(48)} \times 100 \text{ [\%]}$$
$$\alpha = 0.575 \text{ [\%]}$$

Step No. 40 Calculate the flux density, B_m.

$$B_m = \frac{VPX104}{K_f f A_c N_p} \text{ [tesla]}$$
$$B_m = \frac{(66.9)\times 10^4}{(4.0)(50000)(0.58)(38)} \text{ [tesla]}$$
$$B_m = 0.152 \text{ [tesla]}$$

Step No. 41 Calculate the watts per kilogram, WK, using P material Figure 4.1

$$WK = 3.18\times 10^{-4}(f)^{(1.51)}(B_{ac})^{(2.747)} \text{ [watts/ kilogram]}$$
$$WK = 3.18\times 10^{-4}(50000)^{(1.51)}(0.152)^{(2.747)} \text{ [watts/ kilogram]}$$
$$WK = 22.4 \text{ [watts/ kilogram] or [milliwatts/ gram]}$$

Step No. 42 Calculate the core loss, P_{fe}.

$$P_{fe} = \left(\frac{\text{milliwatts}}{\text{gram}}\right) W_{tfe} \times 10^{-3} \text{ [watts]}$$
$$P_{fe} = (22.4)(13)\times 10\text{-}3 \text{ [watts]}$$
$$P_{fe} = 0.291 \text{ [watts]}$$

Step No. 43 Calculate the total loss, core P_{fe} and copper P_{cu}, in watts P_{Σ}.

$$P_{\Sigma} = P_{fe} + P_{cu} \text{ [watts]}$$
$$P_{\Sigma} = (0.291) + (0.276) \text{ [watts]}$$
$$P_{\Sigma} = 0.567 \text{ [watts]}$$

Step No. 44 Calculate the watt density, λ.

$$\lambda = \frac{P_{\Sigma}}{A_t} \quad \text{[watts / cm']}$$

$$\lambda = \frac{0.567}{17.4} \quad \text{[watts/ cm']}$$

$$A = 0.0326 \quad \text{[watts/ cm}^2\text{]}$$

Step No. 45 Calculate the temperature rise in degrees C.

$$T_r = 450(\lambda)^{(0.826)} \quad \text{[degrees C]}$$

$$7', = 450(0\ .0326\ )^{(0,,,2,)} \text{[degrees C]}$$

$$T_r = 26.6 \quad \text{[degrees C]}$$

Design Summary

Core Part Number	PQ-42016
Magnetic Material	P Ferrite
Frequency	50kHz
Flux Density	0.152 T
Core Loss	0.291 W
Permeability	2500
Millihenrys per 1K Turns	2930
Window Utilization Ku	0.278

Winding Number	1	2	3	4
AWG	26	23	26	28
Strands	1	1	1	1
Total Turns	38	8	34	8
Taps	None	Center	Center	None
Resistance Ω	0.222	0.0116	0.0992	0.0744
Copper Loss	0.112 w	0.0464 w	0.0992 W	0.0186 w

Engineering Notes

Full Bridge Converter Design using a Ferrite PQ Core

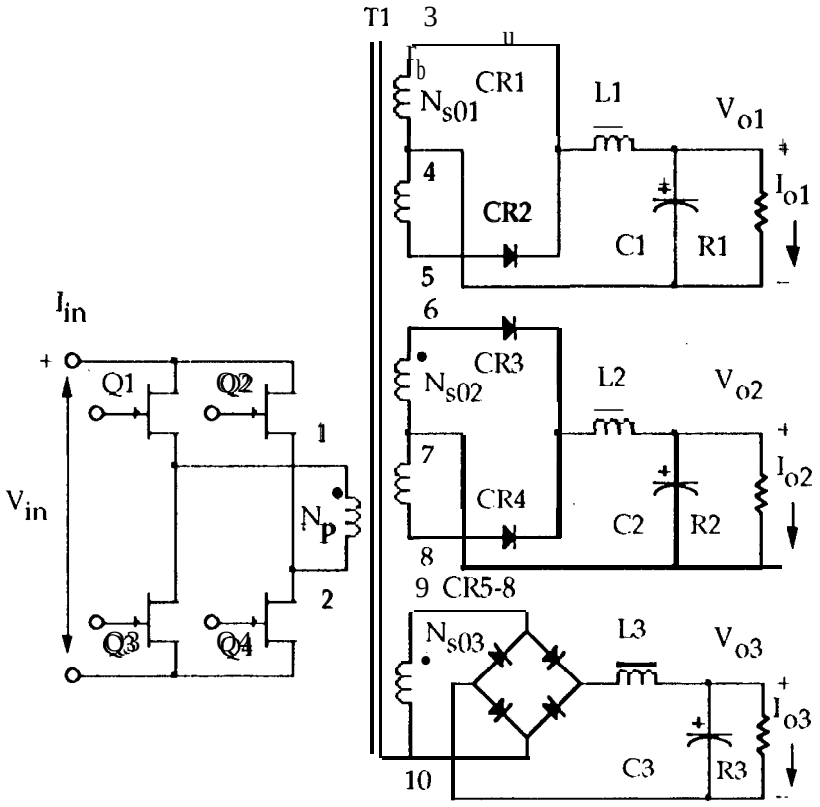

Figure 3.3 Three output full bridge converter.

Full Bridge Converter Transformer Design Specification

1.	Input voltage min	V_{min} = 150 volts
2.	Output voltage (center tapped)	V_{o1} = 5 volts
3.	Output current	I_{o1} = 2.(I amps
4.	Output voltage (center tapped)	V_{o2} = 28 volts
5.	Output current bias	I_{o2} = 1.0 amp
6.	Output voltage bias (bridge)	V_{o3} = 12 volts
7.	Output current bias	I_{o3} = 0.5 amps
8.	Frequency	f =50 kHz
9.	Regulation	α = 0.5 %
10.	Efficiency	η = 95 %
11.	Total dwell time	$\tau_{\tau\omega}$ = 1 µsec
12.	Operating flux density	B_m = 0.15 tesla
13.	Transistor on resistance	R_Q = 0.8 ohms
14.	Diode voltage drop	V_d = 1.0 volt

Step No. 1 Calculate the total period, T.

$$T = \frac{1}{f} \text{ [seconds]}$$

$$1' = \frac{1}{50000} \text{ [seconds]}$$

$$T = 20 \text{ [}\mu\text{sec]}$$

Step No. 2 Calculate the maximum on time, t_{on}.

$$t = \frac{T}{2} = 10 \text{ [}\mu\text{sec]}$$

$$f_{on(max)} = f - t_{tw} \text{ [}\mu\text{sec]}$$

$$t_{on(max)} = 10 - 1 \text{ [}\mu\text{sec]}$$

$$f_{on(max)} = 9 \text{ [}\mu\text{sec]}$$

Step No. 3 Calculate the maximum on duty ratio, D_{max}.

$$D_{max} = \frac{t_{on(max)}}{T}$$

$$D_{max} = \frac{9.0}{20}$$

$$D_{max} = 0.45$$

Step No. 4 Calculate the maximum apparent secondary power, P_{ts}.

$$PO = I_o(V_o + V_d)\sqrt{2} \text{ [watts] tapped winding}$$

$$PO = I_o(V_o + V_d) \text{ [watts] single winding}$$

$$P_{tso1} = (2)(5 + 1)(1.41) = 16.9 \text{ [watts]}$$

$$P_{tso2} = (1)(28 - t\ 1)(1,41) = 40.9 \text{ [watts]}$$

$$P_{tso3} = (0.5)(12 + 2) = 7.0 \text{ [watts]}$$

$$P_{ts} = P_{tso1} + P_{tso2} + P_{tso3} \text{ [watts]}$$

$$P_{ts} = (16.9) + (40.9) + - (7.0) = 64.8 \text{ [watts]}$$

Step No. 5 Calculate the apparent power, Pt.

$$P_t = P_{ts}\left(\frac{1}{\eta} + 1\right) \text{ [watts]}$$

$$P_t = 64.8\left(\frac{1}{0.95} + 1\right) \text{ [watts]}$$

$$P_t = 133 \text{ [watts]}$$

Step No. 6 Calculate the electrical conditions, K_e.

$$K_e = 0.145\left(K_f\right)^2\left(f\right)^2\left(B_m\right)^2 x10^{-4}$$

$$K_e = (0.145)(4.0)^2(50000)^2(0.15)^2 x10^{-4}$$

$$K_e = 13050$$

Step No. 7 Calculate the core geometry, Kg.

$$Kg = \frac{P_t}{2K_e\alpha} \text{ [cm']}$$

$$K_g = \frac{(133)}{2(13050)(0.5)} \text{ [cm']}$$

$$K_g = 0.0102 \text{ [cm}^5\text{]}$$

$$K_g = (0.0102)(1.25) = 0.0128 \text{ [cm']}$$

See Engineering Design Note No. 4 and 19.

Step No. 8 Select from Table 4.3a PQ core comparable in core geometry, Kg.

Core number	PQ-42016
Manufacturer	Magnetics Inc.
Magnetic material	I', μ_i = 2500
Magnetic path length	MI'L = 3.74 cm
Window height	G = 1.00 cm
Core weight	Wtfe = 13.0 grams
Copper weight	Wt_{cu} = 6.62 grams
Mean length turn	MLT = 4.34 cm
Iron area	A_c = 0.58 cm^2
Window area	W_a = ().428 cm^2
Area product	A_p = 0.248 cm^4
Core geometry	Kg= 0.0133 cm^5
Surface area	At= 17.4 cm^2
Millihenrys per 1000 turns	mh = 2930

Step No. 9 Calculate the total secondary load power, P_{to}.

$$P_o = I_o(V_o + V_d) \text{ [watts]}$$
$$P_{o1} = (2)(5+1) \text{ [watts]}$$
$$P_{o2} = (1)(28+1) \text{ [watts]}$$
$$P_{o3} = (0.5)(12+-2) \text{ [watts]}$$
$$P_{to} = P_{o1} + P_{o2} + P_{o3} \text{ [watts]}$$
$$P_{to} = (12) + (29) + (7.0) \text{ [watts]}$$
$$P_{to} = 48 \text{ [watts]}$$

Step No. 10 Calculate the average primary current, I_{in}.

$$I_{in} = \frac{P_{to}}{V_p \eta} \text{ [amps]}$$
$$I_{in} = \frac{48}{(150)(0.95)} \text{ [amps]}$$
$$I_{in} = 0.337 \text{ [amps]}$$

Step No. 11 Calculate the average primary voltage, V_p.

$$V_p = (V_{in})(2D_{max}) - 2(I_{in}R_Q) \text{ [volts]}$$
$$V_p = ((150)(0.9)) - 2(0.337)(0.8) \text{ [volts]}$$
$$V_p = 134.5 \text{ [volts]}$$

See Engineering Design Note No, 22.

Step No. 12 Calculate the primary turns, N_p.

$$N_p = \frac{V_p x10^4}{K_f B_m f A_c} \text{ [turns]}$$
$$N_p = \frac{(134.5)X10^4}{(4.0)(0.15)(50000)(0.580)} \text{ [turns]}$$
$$N_p = 77 \text{ [turns]}$$

See Engineering Design Note No. 2.

Step No. 13 Calculate the current density J using a window utilization Ku = 0.32.

$$J = \frac{P_t x 10^4}{K_f \bar{K}_u B_m f A_p} \quad [\text{amps / cm}^2]$$

$$J = \frac{(133)X10^4}{(4.0)(0.32)(0.15)(50000)(0.248)} \quad [\text{amps, cm}^2]$$

$$J = 559 \quad [\text{amps / cm}^2]$$

Step No, 14 Calculate the primary rms current, $I_{p(rms)}$.

$$I_{p(rms)} \frac{I_{in}}{\sqrt{2D_{max}}} \quad [\text{amps}]$$

$$I_{p(rms)} = \frac{0.337}{(0.949)} \quad [\text{amps}]$$

$$I_{p(rms)} = 0.355 \quad [\text{amps}]$$

See Engineering Design Note No. 23.

Step No.]5 Calculate the primary wire area, A_{wp}.

$$A_{wp} = \frac{I_{p(rms)}}{J} \quad [\text{cm}^2]$$

$$A_{wp} = \frac{0.355}{(559)} \quad [\text{cm}^2]$$

$$A_{wp} = 0.000635 \quad [\text{Cn1}^2 1$$

Step No. 16 Calculate the skin depth y. The skin depth will be the radius of the wire.

$$\gamma = \frac{6.62}{\sqrt{f}} \quad [\text{cm}]$$

$$\gamma = \frac{6.62}{\sqrt{50x10^3}} \quad [\text{cm}]$$

$$\gamma = 0.0296 \quad [\text{cm}]$$

See Engineering Design Note No. 1.

Step No. 17 Calculate the wire area.

$$wire_A = \pi(\gamma)^2 \quad [\text{cm}^2 1$$

$$wire_A = (3.14)(0.0296)^2 [\text{cm}^2]$$

$$wire_A = 0.00275 \quad [\text{cm}^2]$$

Step No. *18* Select a wire size with the required area from the wire Table 9.1. If the area is not within 10% of the required area, then go to the next smallest size.

$$AWG = \#23$$

$$A_{w(B)} = 0.00259 \ [\text{cm}^*]$$

$$\mu\Omega \ /\text{cm} = 666$$

$$A_{w(I)} = 0.00314 \ [\text{cm}^2] \text{ with insulation}$$

See Engineering Design Note No. 3.

Step No. 19 Select a wire size with the required area from the wire Table 9.1. If the area is not within 10% of the required area, then go to the next smallest size and record the resistance in $\mu\Omega$/cm.

$$A_{wp} = 0{,}000635 \ [\text{cm}^2]$$

$$AWG \ \#29$$

$$A_{w(B)} = 0.000647 \ [\text{cm}^*]$$

$$\mu\Omega \ / \text{cm} = 2664$$

See Engineering Design Note No. 3.

Step No. 20 Calculate the primary winding resistance, R_p.

$$R_p = MLT(N_p)\left(\frac{\mu\Omega}{cm}\right)x10^{-6} \ [\text{ohms}]$$

$$R_p = 4.34(77)(2664)x10\text{-}6 \ [\text{ohms}]$$

$$R_p = 0.890 \ [\text{ohms}]$$

Step No. 21 Calculate the primary copper loss, P_p.

$$P_p = I_p^2 R_p \ [\text{watts}]$$

$$P_p = (0.355)^2(0.890) \ [\text{watts}]$$

$$P_p = 0.112 \ [\text{watts}]$$

Step No. 22 Calculate the secondary turns, N_{S01}, each side of center tap.

$$N_{s01} = \frac{N_p(V_{01} + V_d)}{V_p}\left(1 + \frac{\alpha}{100}\right) \ [\text{turns}]$$

$$N_{sol} = \frac{77(5+1)}{134.5}\left(1 + \frac{0.5}{100}\right) [\text{turns}]$$

$$N_{s01} = 3.45 \ [\text{turns}]$$

$$\text{use } N_{s01} = 4 \ [\text{turns}]$$

See Engineering Design Note No. 2.

Step No. 23 Calculate the secondary wire area A_{ws01}. Because of the center tap winding the current is multiplied the square root of the duty ratio, $\sqrt{D_{max}}$.

$$A_{U,\ Sol} = \frac{I_{s01}\sqrt{D_{max}}}{J}\ [cm^2]$$

$$A_{ws01} = \frac{2.0(0.671)}{559}\ [cm^2]$$

$$A_{ws01} = 0.00240\ [cm^2]$$

Step No. 24 Calculate the required number of strands, S_{ns01}, and the $\mu\Omega/cm$.

$$S_{ns01} = \frac{A_{U,\ Sol}}{wire_A\ \#\ 23}$$

$$S_{ns01} = \frac{(0.00240)}{(0.00259)} = 0.93 \text{ use } 1$$

$$\mu\Omega / cm = 666$$

See Engineering Design Note No.2.

Step No. 25 Calculate the secondary winding resistance, R_{s01}.

$$R_{s01} = MLT(N_{s01})\left(\frac{\mu\Omega}{cm}\right) x10^{-6}\ [ohms]$$

$$R_{s01} = 4.34(4)(666)x10^{-6}\ [ohms]$$

$$R_{s01} = 0.0116\ [ohms]$$

Step No. 26 Calculate the secondary copper loss, P_{s01}.

$$P_{s01} = I_{s01}^2 R\ [watts]$$

$$P_{s01} = (2.0)^2(.0116)\ [watts]$$

$$P_{s01} = 0.0464\ [watts]$$

Step No. 27 Calculate the secondary turns, N_{s02}, each side of center tap.

$$N_{s02} = \frac{N_p(V_{02} + V_d)}{V_{in}}\left(1 + \frac{\alpha}{100}\right)[turns]$$

$$N_{s02} = \frac{77(28 + 1)}{134.5}\left(1 + \frac{0.5}{100}\right)[turns]$$

$$N_{s02} = 16.7\ [turns]$$

$$\text{use } N_{s02} = 17\ [turns]$$

See Engineering Design Note No. 2.

Step No. 28 Calculate the secondary wire area A_{ws02}. Using a center tap winding the current is multiplied the square root of duty ratio, $\sqrt{D_{max}}$.

$$A_{ws02} = \frac{I_{s02}\sqrt{D_{max}}}{J} \quad [cm^2]$$

$$A_{w02} = \frac{1.0(0.671)}{559} \quad [cm^2]$$

$$A_{ws02} = 0.00120 \quad [cm^2]$$

See Engineering Design Note No.3.

Step No. 29 Select a wire size with the required area from the wire Table 9.1. If the area is not within 10% of the required area, then go to the next smallest size and record the resistance in $\mu\Omega/cm$.

$$A_{w02} = 0.00120 \quad [cm^2]$$

$$AWG\ \#26$$

$$A_{w(B)} = 0.00128 \quad [cm^2]$$

$$/1Q/cm=1345$$

Step No. 30 Calculate the secondary winding resistance, R_{s02}.

$$R_{s02} = MLT(N_{s02})\left(\frac{\mu\Omega}{cm}\right) x1\ 0^{-6} \quad [ohms]$$

$$R_{s02} = 4,34(17)(1345)x1\ 0^{-6} \quad [ohms]$$

$$R_{s02} = 0.0992 \quad [ohms]$$

Step No. 31 Calculate the secondary copper loss, P_{s02}.

$$P_{s02} = I_{s02}^2 R_{s02} \quad [watts]$$

$$P_{s02} = (1.0)^2(.0992) \quad [watts]$$

$$P_{s02} = 0.0992 \quad [watts]$$

Step No. 32 Calculate the secondary turns, N_{s03}.

$$N_{s03} = \frac{N_p(V_{03} + 2V_d)}{V_p}\left(1 + \frac{\alpha}{100}\right) \quad [turns]$$

$$N_{s03} = \frac{77(12+2)}{134.5}\left(1 + \frac{0.5}{100}\right) \quad [turns]$$

$$N_{s03} = 8.05 \quad [turns]$$

$$use\ N_{s03} = 8 \quad [turns]$$

See Engineering Design Note No. 2.

Step No. 33 Calculate the secondary wire area, A_{ws03}.

$$A_{ws03} = \frac{I_{s03}}{J} \quad [cm']$$

$$A_{"0^3} = \frac{0.5}{559} \quad [cm']$$

$$A_{ws03} = 0.\ 000894 \quad [cm']$$

See Engineering Design Note No. 3.

Step No. 34 Select a wire size with the required area from the wire Table 9.1. If the area is not within 10% of the required area, then go to the next smallest size and record the resistance in $\mu\Omega/cm$.

$$A_{w03} = 0.000894 \quad [cm']$$

$$AWG\ \#\ 28$$

$$A_{w(B)} = 0.000805 \quad [cm']$$

$$\mu\Omega / cm = 2143$$

Step No. 35 Calculate the secondary winding resistance, R_{s03}.

$$R_{s03} = MLT(N_{s03})\left(\frac{\mu\Omega}{cm}\right) x1\ 0^{-6} \quad [ohms]$$

$$R_{s03} = 4.34\ (8)(2143)x10\text{-}G \quad [ohms]$$

$$R_{s03} = 0.0744 \quad [ohms]$$

Step No. 36 Calculate the secondary copper loss, P_{s03}.

$$P_{s03} = I_{s03}^2 R_{s03} \quad [watts]$$

$$P_{s03} = (0.5)^2(.0744) \quad [watts]$$

$$P_{s03} = 0.0186 \quad [watts]$$

Step No. 37 Calculate the total copper loss, P_{cu}.

$$P_{cu} = P_p + P_{s01} + P_{s02} + P_{s03} \quad [watts]$$

$$P_{cu} = (0.\ I\ 12) + (0.0464) + (0.0992) + (0.0186) \quad [watts]$$

$$P_{cu} = 0.276 \quad [watts]$$

Step No. 38 Calculate the regulation, α, for this design.

$$\alpha = \frac{P_{cu}}{P_{o}} x100 \ [\%]$$

$$\alpha = \frac{(0.276)}{(48)} x100 [\%]$$

$$\alpha = 0.575 \ [\%]$$

Step No. 39 Calculate the window utilization, Ku.

$$A_{wt} = NS_{ns}(A_w) [cm^2]$$

$$A_{wtp} = (77)(1)(0.000647) = 0.0498 \ [cm^2]$$

$$A_{wts1} = 2(4)(1)(0.00259) = 0.0207 \ [cm^2]$$

$$A_{wts2} = 2(17)(1)(0.00128) = 0.0435 \ [cm^2]$$

$$A_{wts3} = (8)(1)(0.000805) = 0.00644 \ [cm^2]$$

$$A_{wt} = (0.0498) + (0.0207) + (0.0435) + (0.00644) \ [cm^2]$$

$$K_u = \frac{A_{wt}}{W_a} = \frac{0.120}{0.428} = 0.280$$

Step No. 40 Calculate the flux density, B_m.

$$B_m = \frac{V_p x10^4}{K_f f A_c N_p} \ [tesla]$$

$$B_m = \frac{(134.5)X10^4}{(4.0)(50000)(0.58)(77)} \ [tesla]$$

$$B_m = 0.151 \ [tesla]$$

See Engineering Design Note No. 5.

Step No. 41 Calculate the watts per kilogram, WK.

$$WK = 3.18x10^{-4}(f)^{(1.51)}(B_{ac})^{(2.747)} \ [watts / kilogram]$$

$$WK = 3.18x10^{-4}(50000)^{(1.51)}(0.151)^{(2.747)} \ [watts / kilogram]$$

$$WK = 22 \ [watts / kilogram] \ or \ [milliwatts/gram]$$

Step No. 42 Calculate the core loss, P_{fe}.

$$P_{fe} = \left(\frac{\text{milliwatts}}{\text{gram}}\right) W_{tfe} x10^{-3} \quad \text{[watts]}$$

$$P_{fe} = (22)(\ 13)x10\text{-}3 \ \text{[watts]}$$

$$P_{fe} = 0,\ 286 \ \text{[watts]}$$

Step No. 43 Calculate the total loss, core P_{fe} and copper, P_{cu} in watts P_{Σ}.

$$P_{\Sigma} = P_{fe} + P_{cu} \ \text{[watts]}$$

$$P_{\Sigma} = (0,286) + (0.276) \ \text{[watts]}$$

$$P_{\Sigma} = 0.562 \ \text{[watts]}$$

Step No. 44 Calculate the watt density, λ.

$$\lambda = \frac{P_{\Sigma}}{A} \ \text{[watts/ cm}^2\text{]}$$

$$\lambda = \frac{0.'562}{17.4} \ \text{[watts / cm']}$$

$$A = 0.0323 \ \text{[watts/ cm}^2\text{]}$$

Step No. 45 Calculate the temperature rise in degrees C.

$$T_r = 450(\lambda)^{(0.826)} \ \text{[degrees C]}$$

$$T_r = 450(0.0323)^{(0.826)} \ \text{[degrees C]}$$

$$T_r = 26.4 \ \text{[degrees C]}$$

Design Summary

Core Part Number	PQ-42016
Magnetic Material	P Ferrite
Frequency	50kHz
Flux Density	0.151'
Core Loss	0.286 w
Permeability	2500
Millihenrys per 1K Turns	2930
Window Utilization Ku	0.280

Winding Number	1	2	3	4
AWG	29	23	26	28
Strands	1	1	1	1
Total Turns	77	8	34	8
Taps	None	Center	Center	None
Resistance Ω	0.890	0.0116	0.0992	0.0744
Copper Loss	0.112 w	0.0464 w	0.0992 W	0.0186 w

Forward Converter Design using a Ferrite ETD Core

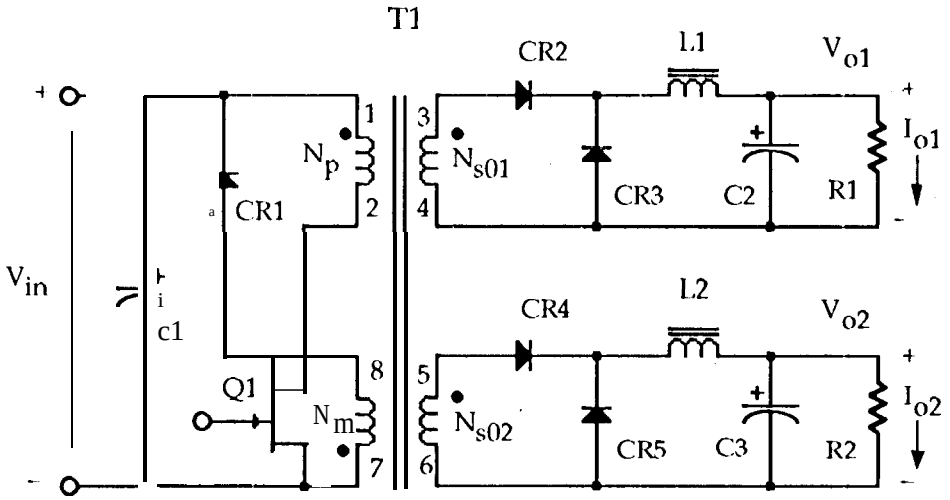

Figure 3.4 Two output single ended forward converter.

Single Ended Forward Converter Transformer Design Specification

1. input voltage max ..... v_{max} = 35 volts
2. input voltage nom ..... v_{nom} = 28 volts
3. Input voltage min ..... V_{min} = 22 volts
4. Output voltage ..... V_o = 5 volts
5. Output current ..... 1_0 == 2 amps
6. Output voltage bias ..... V.12 volt
7. Output current bias ..... I_0 = 2 amps
8. Demag winding turns ratio 1:1
9. Demag power 1 0%
10. Frequency ..... f = 50 kHz
11. Converter efficiency ..... η = 80%
12. Maximum duty ratio ..... D_{max} = 0.45
13. Regulation ..... a = 0.5 %
14. Operating flux density ..... AB_m = 0.1 tesla
15. Diode voltage ..... V_d = 1.0 volt
16. Transistor on resistance ..... R_Q = 0.078 ohms

0

Step No. 1 Calculate the total period, T.

$$T = \frac{1}{f} \quad \text{[seconds]}$$

$$T = \frac{1}{50000} \quad \text{[seconds]}$$

$$T = 20 \quad [\mu\text{sec}]$$

Step No. 2 Calculate the maximum transistor on time, t_{on}.

$$t_{on} = TD_{max} \; [\mu\text{sec.}]$$

$$t_{on} = (20\text{X}1\ 0\text{-}^{6})(0.\ 45) \; [//\text{sec.}]$$

$$t_{on} = 9.\ o \; [\mu\text{sec.}]$$

Step No. 3 Calculate the maximum secondary output power, P_{ts}.

$$P_{01} = I_{01}(V_{01} + V_d) \quad \text{[watts]}$$

$$P_{ts01} = (2)(5 + 1) \quad \text{[watts]}$$

$$P_{ts02} = (2)(12 \text{ -t } 1) \quad \text{[watts]}$$

$$P_{ts} = (12) + (26) \quad \text{[watts]}$$

$$P_{ts} = 38 \quad \text{[watts]}$$

Step No. 4 Calculate the total input power, Pin.

$$P_{in} = \frac{P_{ts}}{\eta} \quad \text{[watts]}$$

$$P_{in} = \frac{(38)}{(0.80)} \quad \text{[watts]}$$

$$P_{in} = 47.5 \quad \text{[watts]}$$

Step No. 5 Calculate the electrical conditions, K_e.

$$K_e = 0.145(f)^2(\Delta B_m)^2 \text{x}10^{-4}$$

$$K_e = (0.145)(50000)^2(0.1)^2 \text{x}10^{-4}$$

$$K_e = 362$$

Step No. 6 Calculate the core geometry, K_g, adding 10% to the input power Pi_n for the demag winding.

$$K_g = \frac{1.1\, P_{in} D_{max}}{K_e \alpha} \quad [cm']$$

$$K_g = \frac{(52)(0.45)}{(362)(0.5)} \quad [cm^5]$$

$$K_g = 0{,}129 \quad [cm^5]$$

$$K_g = (0.129)(1.25) = 0.161 \quad [cm^5]$$

See Engineering Design Note No. 4 and 19.

Step No. 7 Select from Table 4.8a ETD core comparable in core geometry, Kg.

Core number	ETD-43939
Manufacturer	Magnetics Inc.
Magnetic material	P, μ_i = 25(MI
Magnetic path length	MI'L = 9.27 cm
Window Height	G = 2.85 cm
Core weight	Wtfe = 60.0 grams
Copper weight	Wt_{cu} = 75 grams
Mean length turn	MLT = 8.37 cm
Iron area	A_c = 1.23 cm^2
Window Area	Wa = 2.51 cm^2
Area Product	A_p = 3.08 cm^4
Core geometry	Kg= 0.181 cm^5
Surface area	At= 69.5 cm^2
Millihenrys per 1000 turns	mh = 21O(I

Step No. 8 Calculate the primary rms current, $I_{p(rms)}$.

$$I_{p(rms)} = \frac{Pit,}{V_{min}\sqrt{D_{max}}} \quad [amps]$$

$$I_{p(rms)} = \frac{(47.5)}{(22)(0.671)} \quad [amps]$$

$$I_{p(rms)} = 3.22 \quad [amps]$$

Step No. 9 Calculate the primary voltage, V_p.

$$V_p = V_{min} - (I_p R_Q) \quad [volts]$$

$$V_p = 22 - (3.2.2)(0.078) \quad [volts]$$

$$V_p = 21.75 \quad [volts]$$

Step No. 1(I Calculate the number of primary turns, N_p.

$$N_p = \frac{V_p D_{max} x 10^4}{f A_c \Delta B} \quad [\text{turns}]$$

$$N_p = \frac{(21.75)(0.45)x10^4}{(50000)(1.23)(0.1)} \quad [\text{turns}]$$

$$N_p = 15.9 \quad [\text{turns}]$$

$$\text{use } N_p = 16 \quad [\text{turns}]$$

See Engineering Design Note No. 2.

Step No. 11 Calculate the current density J using a window utilization $K_u = 0.32$.

$$J = \frac{2 P_t \sqrt{D_{max}} \cdot 10^4}{\Delta B_m f A_p K_u} [\text{amps} / \text{cm}^2]$$

$$J = \frac{2(52)(0.671)x104}{(0.1)(50000)(3.08)(0,32)} \quad \text{amps} / \text{cm}^2]$$

$$J = 142 \quad [\text{amps} / \text{cm}^2]$$

Step No. 12 Calculate the required primary bare wire area A_{wp}.

$$A_{wp} = \frac{I_p}{J} \quad [\text{cm}^2]$$

$$A_{wp} = \frac{3.22}{142} \quad [\text{cm}^2]$$

$$A_{wp} = 0.0227 \quad [\text{cm}^2]$$

Step No. 13 Calculate the skin depth, y. The skin depth will be the radius of the wire.

$$\gamma = \frac{6.62}{\sqrt{f}} \quad [\text{cm}]$$

$$\gamma = \frac{6.62}{\sqrt{50x10^3}} \quad [\text{cm}]$$

$$y = 0.0296 \quad [\text{cm}]$$

See Engineering Design Note No. 1.

Step No. 14 Calculate the wire area.

$$wire_A = \pi(\gamma)^2 \quad [\text{cm}^2]$$

$$wire_A = (3.14)(0.0296)^2 [\text{cm}^2]$$

$$wire_A = 0.00275 \quad [\text{cm}^2]$$

Step No. 15 Select a wire size with the required area from the wire Table 9.1. If the area is not within 10% of the required area, then go to the next smallest size,

$$A\,WG = \#23$$
$$A_{w(B)} = 0.00259\ [\mathrm{cm}^2]$$
$$\mu\Omega / cm = 666$$
$$A_w = 0.00314\ [\mathrm{cm}^2]\ \text{with insulation}$$

Step No. 16 Calculate the required number of primary strands, S_{np}, and the new $\mu\Omega/cm$.

$$S_{np} = \frac{A_{wp}}{wire_A \#23}$$
$$S_{np} = \frac{(0.0227)}{(0.00259)}$$
$$S_{np} = 8.76\ \text{use } 9$$
$$(new)\mu\Omega / cm = \frac{\mu\Omega / cm}{S_{np}} = \frac{666}{9} = 74$$

See Engineering Design Note No. 2.

Step No. 17 Calculate the primary winding resistance R_p.

$$R_p = MLT(N)\left(\frac{\mu\Omega}{cm}\right) x10^{-6}\quad [ohms]$$
$$R_p = (8.37)(16)(74)x10\text{-}S\ [\text{ohms}]$$
$$R_p = 0.00991\ [\text{ohms}]$$

Step No. 18 Calculate the primary copper loss P_p.

$$P_p = I_p^2 R_p\ [\text{watts}]$$
$$P_p = (3{,}22)^2(.00991)\ [\text{watts}]$$
$$P_p = 0.103\ [\text{watts}]$$

Step No. 19 Calculate the transformer secondary voltage, Vs.

$$V_S = \frac{V_o + V_d}{D_{max}} \quad \text{[volts]}$$

$$V_{s01} = \frac{(5.0 + 1)}{(0.45)} \quad \text{[volts]}$$

$$V_{s01} = 13.3 \quad \text{[volts]}$$

$$V_{s02} = \frac{(12.0 + 1)}{(0.45)} \quad \text{[volts]}$$

$$V_{s02} = 28.8 \quad \text{[volts]}$$

Step No. 2(I Calculate the number of secondary turns, N_S.

$$N_{s01} = \frac{N_p V_{s01}}{V_p}\left(1 + \frac{\alpha}{100}\right) \quad \text{[turns]}$$

$$N_{s01} = \frac{(16)(13.3)}{(21.75)}\left(1 + \frac{0.5}{100}\right) \quad \text{[turns]}$$

$$N_{s01} = 9.83 \quad \text{[turns]}$$

$$\text{use } N_{s01} = 10 \quad \text{[turns]}$$

See Engineering Design Note No. 2.

Step No. 21 Calculate the secondary rms current, I_S.

$$I_{sol} = I_{o01}\sqrt{D_{max}} \quad \text{[amps]}$$

$$I_{s01} = 2(0.671) \quad \text{[amps]}$$

$$I_{s01} = 1.34 \quad \text{[amps]}$$

Step No. 22 Calculate the secondary wire area, A_{WS01}.

$$A_{WS01} = \frac{I_{s01}}{J} \quad \text{[cm}^2\text{]}$$

$$A_{w01} = \frac{1.34}{142} \quad \text{[cm}^2\text{]}$$

$$A_{w01} = 0.00944 \quad \text{[cm}^2\text{]}$$

Step No. 23 Calculate the number of secondary strands, S_{ns01}, and the $\mu\Omega/cm$.

$$S_{ns01} = \frac{A_{ws01}}{wire_A \#23}$$

$$S_{ns01} = \frac{(0.00944)}{(0.00259)}$$

$$S_{ns01} = 3.64 \text{ use } 4$$

$$(new)\mu\Omega / cm = \frac{\mu\Omega / cm}{S_{ns01}} = \frac{666}{4} = 166$$

Step No. 24 Calculate the winding resistance, R_{s01}.

$$R_{s01} = MLT(N_{s01})\left(\frac{\mu\Omega}{cm}\right)x10^{-6} \text{ [ohms]}$$

$$R_{s01} = 8.37 \ (10)(166)x10\text{-}G \text{ [ohms]}$$

$$R_{s01} = 0.0139 \text{ [ohms]}$$

Step No. 25 Calculate the secondary copper loss, P_{s01}.

$$P_{s01} = I_{s01}^2 R \text{ [watts]}$$

$$P_{s01} = (1,34)^2(,0139) \text{ [watts]}$$

$$P_{s01} = 0.0250 \text{ [watts]}$$

Step No. 26 Calculate the number of secondary turns, N_{s02}.

$$N_{S02} = \frac{N_p V_{s02}}{V_p}\left(1 + \frac{\alpha}{100}\right) \text{ [turns]}$$

$$N_{s02} = \frac{(16)(28.8)}{(21.75)}\left(1 + \frac{0.5}{100}\right) \text{ [turns]}$$

$$N_{s02} = 21.3 \text{ [turns]}$$

$$\text{use } N_{s02} = 21 \text{ [turns]}$$

See Engineering Design Note No. 2.

Step No. 27 Calculate the secondary rms current, I_{s02}.

$$I_{s02} = I_{o02}\sqrt{D_{max}} \text{ [amps]}$$

$$I_{s02} = 2(0.671) \text{ [amps]}$$

$$I_{s02} = 1.34 \text{ [amps]}$$

Step No. 28 Calculate the secondary wire area, A_{ws02}.

$$A_{ws02} = \frac{I_{s02}}{J} \quad [cm^2]$$

$$A_{w02} = \frac{1.34}{142} [cm^2]$$

$$A_{w02} = 0.00944 \ [cm^2]$$

Step No. 29 Calculate the number of secondary strands, S_{ns02}, and the $\mu\Omega$/cm.

$$s_{ns02} = \frac{A_{ws02}}{wire_A \# 23}$$

$$S_{ns02} = \frac{(0.00944)}{(0.00259)}$$

$$s_{ns02} = 3.64 \text{ use } 4$$

$$(new)\mu\Omega/\text{cm} = \frac{\mu\Omega / cm}{S_{ns02}} = \frac{666}{4} = 166$$

See Engineering Design Note No. 3.

Step No. 30 Calculate the winding resistance, R_{s02}.

$$R_{s02} = MLT(N_{s02})\left(\frac{\mu\Omega}{cm}\right) x10^{-6} \quad [ohms]$$

$$R_{S02} = 8.37(21)(1.66)x10^{-6} \quad [ohms]$$

$$R_{s02} = 0.0292 \ [ohms]$$

Step No. 31 Calculate the secondary copper loss, P_{s02}.

$$P_{s02} = I_{s02}^2 R \ [watts]$$

$$P_{s02} = (1.34)^2(.0292) \quad [watts]$$

$$P_{s02} = 0.0524 \ [watts]$$

Step No. 32 Calculate the demag winding inductance, L_{demag}, were N_{demag} equals N_p.

$$L_n = L_{1000} N_{demag}^2 x10^{-6} \ [mh]$$

$$L_n = (2100)(16)2 \ X10^{-6} \ [mh]$$

$$L_n = 0.538 \ [mh]$$

Step No. 33 Calculate the delta current, Al in the demag winding.

$$\Delta I = \frac{V_p t_{on}}{L_{demag}} \quad \text{[amps]}$$

$$\Delta I = \frac{(21.75)(9\text{x}10\text{-}')}{(538\text{x}10\text{-}')} \quad \text{[amps]}$$

$$\Delta I = 0.364 \quad \text{[amps]}$$

Step No. 34 Calculate the demag rms current, I_{demag} see Figure 9.1.

$$I_{demag} = \Delta I\sqrt{0.150} \quad \text{[amps]}$$

$$I_{demag} = (0.364)\sqrt{0.150} \quad \text{[amps]}$$

$$I_{demag} = 0.141 \quad \text{[amps]}$$

Step No. 35 Calculate the demag wire size, A_W.

$$Au, = \frac{I_{demag}}{J} \quad \text{[cm']}$$

$$A_{w} = \frac{0.141}{142} \quad \text{[cm']}$$

AU, = *0.00099* [cm']

use #23

See Engineering Design Note No. 3.

Step No. 36 Calculate the winding resistance, R_{sdemag}.

$$R_{sdemag} = MLT\left(N_{sdemag}\right)\left(\frac{\mu\Omega}{cm}\right)\text{x}10^{-6} \quad \text{[ohms]}$$

$$R_{sdemag} = 8.37 \quad (16)(666)\text{x}10\text{-}6 \quad \text{[ohms]}$$

$$R_{sdemag} = 0.0892 \quad \text{[ohms]}$$

Step No. 37 Calculate the secondary copper loss, P_{sdemag}.

$$P_{sdemag} = I^2_{sdemag} R \quad \text{[watts]}$$

$$P_{sdemag} = (0.141\ )'(.0892) \quad \text{[watts]}$$

$$P_{sdemag} = 0.00177 \quad \text{[watts]}$$

Step No. 38 Calculate the window utilization, Ku.

$$[\text{turns}] = \left(N_p S_{np}\right) = (144)\,[\text{primary}]$$
$$[\text{turns}] = \left(N_{s01} S_{ns01}\right) = (40)\ [\text{secondary}]$$
$$[\text{turns}] = \left(N_{s02} S_{ns02}\right) = (84)\ [\text{secondary}]$$
$$[\text{turns}] = \left(N_{demag}\right) = (16)\ [\text{demag}]$$
$$N_t = 284 \text{ turns } \# 23$$
$$K_u = \frac{N_t A_w}{W_a}$$
$$K_u = \frac{(284)(0.00259)}{(2.51)}$$
$$K_u = 0.293$$

Step No. 39 Calculate the total copper loss, P_{cu}.

$$P_{cu} = P_p + P_{s01} + P_{s02} + P_{sdemag}\ [\text{watts}]$$
$$P_{cu} = (0.103)+(0.025)+(0.0524)+(0.00177)\ [\text{watts}]$$
$$P_{cu} = 0.182\ [\text{watts}]$$

Step No. 4(I Calculate the regulation a for this design.

$$a = \frac{P_{cu}}{P_o} \text{ Xloo } [\%]$$
$$a = \frac{(0.182)}{(38)} \text{ x100 } [\%]$$
$$a = 0.479\ [\%]$$

Step No, 41 Calculate the watts per kilogram, WK, using P material Figure 4.1.

$$WK = 3.18\text{x}10^{-4}(f)^{(1.51)}\left(\frac{\Delta B_{ac}}{2}\right)^{(2.747)}\ [\text{watts/ kilogram}]$$
$$WK = (3.18\text{x}1\ 0^{-4})(50000)(1\ \text{“})(0.050)^{(2\ \text{”}747)}\ [\text{watts / kilogram}]$$
$$WK = 1.056\ [\text{watts/ kilogram}] \text{ or } [\text{milliwatts/ gram}]$$

Step No. 42 Calculate the core loss, P_{fe}.

$$P_{fe} = \left(\frac{\text{milliwatts}}{\text{gram}}\right) W_{tfe} x10^{-3} \quad \text{[watts]}$$

$$P_{fe} = (1.056)(60)x10\text{-}3 \text{ [watts]}$$

$$P_{fe} = 0.0634 \text{ [watts]}$$

Step No. 43 Calculate the total 10SS, core P_{fe} and copper, P_{cu} in watts P_{Σ}.

$$P_{\Sigma} = P_{fe} + P_{cu} \text{ [watts]}$$

$$P_{\Sigma} = (0.0634) + (0.182) \text{ [watts]}$$

$$P_{\Sigma} = 0.245 \text{ [watts]}$$

Step No. 44 Calculate the watt density, λ.

$$A = \frac{P_{\Sigma}}{A_{t}} \text{ [watts/ cm}^2\text{]}$$

$$\lambda = \frac{0.245}{69.5} \text{ [watts/ cm}^2\text{]}$$

$$A = 0.0035 \text{ [watts/ cm}^2\text{]}$$

Step No. 45 Calculate the temperature rise in degrees C.

$$T_r = 450(\lambda)^{(0.826)} \text{ [degrees C]}$$

$$T_r = 450(0.0035)^{(0.826)} \text{ [degrees C]}$$

$$T_r = 4.21 \text{ [degrees C]}$$

Design Summary

Core Part Number	ETD-43939
Magnetic Material	P Ferrite
Frequency	50kHz
Flux Density	Δ0.1 T
Core Loss	0.06.34 W
Permeability	2500
Millihenrys per 1K Turns	2100
Window Utilization Ku	0.293

Winding Number	1	2	3	4
AWG	23	23	23	23
Strands	9	4	4	1
Total Turns	16	10	21	16
Taps	None	None	None	None
Resistance Ω	0.0991	0.0139	0.0292	0.0892
Copper' Loss	0.103 W	0.025 W	0.0524 W	0.00255 W

2 Transistor Forward Converter Design using a Ferrite ETD Core

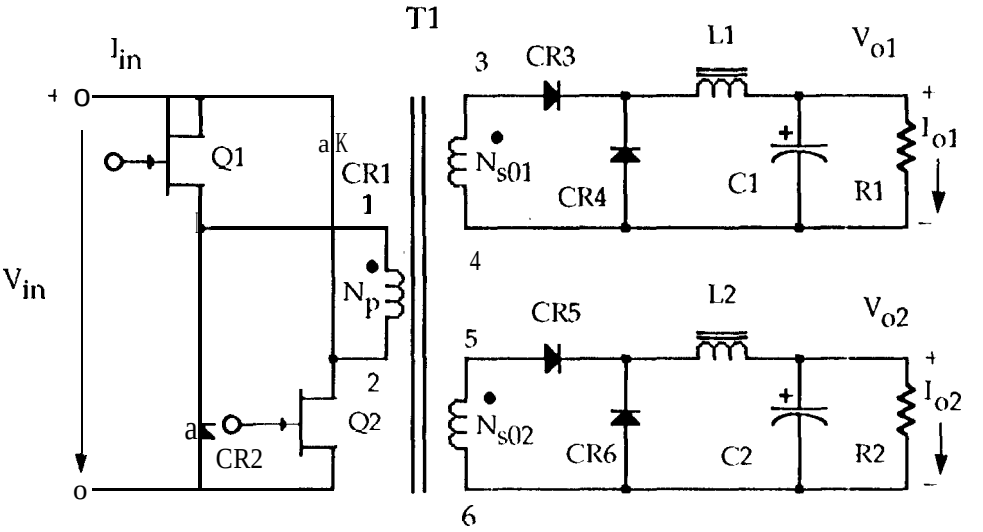

Figure 3.5 Two transistor forward converter with two outputs.

Two Transistor Forward Converter Transformer Design Specification

1. Input dc voltage max ..... V_{max} = 370 volts
2. input dc voltage nom ..... V_{nom} = 244 volts
3. Input dc voltage min ..... V_{min} = 118 volts
4. output voltage ..... V_o = 5 volts
5. Output current ..... I_o = 2 amps
6. Output voltage bias ..... V_o = 12 volts
7. Output current bias ..... I_o = 2 amps
8. Frequency ..... f = 50 kHz
9. Converter efficiency ..... η = 80%
10. Maximum duty ratio ..... D_{max} = 0,45
11. Regulation ..... α = 1.0%
12. Operating flux density ..... ΔB_m = 0.1 tesla
13. Diode voltage drop ..... V_d = 1.0 volt
14. Transistor on resistance ..... R_Q = 0.40 ohms
15. Window utilization ..... K_u = 0.32

Step No. 1 Calculate the total period, T.

$$T = \frac{1}{f} \quad \text{[seconds]}$$

$$T = \frac{1}{50000} \quad \text{[seconds]}$$

$$T = 20 \ [\mu\text{sec}]$$

Step No. 2 Calculate the maximum transistor on time, ton.

$$t_{on} = TD_{max} \ [\mu\text{sec.}]$$

$$t_{on} = (20\text{x}10\text{-}6)(0.45) \ [\mu\text{sec.}]$$

$$t_{on} = 9.0 \ [)/\text{se c.}]$$

Step No. 3 Calculate the maximum secondary output power, P_{ts}.

$$P_{01} = I_{01}(V_{01} +\text{-} V_d) \ \text{[watts]}$$

$$P_{ts01} = (2)(5 + 1) \ \text{[watts]}$$

$$P_{ts02} = (2)(12+ 1) \ \text{[watts]}$$

$$P_{ts} = (12)\text{-I} \ (26) \ \text{[watts]}$$

$$P_{ts} = 38 \ \text{[watts]}$$

Step No. 4 Calculate the total input power, P_{in}.

$$P_{in} = \frac{P_{ts}}{\eta} \ \text{[watts]}$$

$$P_{in} = \frac{(38)}{(0.80)} \ \text{[watts]}$$

$$P_{in} = 47.5 \ \text{[watts]}$$

Step No. 5 Calculate the electrical conditions, K_e.

$$K_e = 0.145(f)^2(\Delta B_m)^2 \text{x}10^{-4}$$

$$K_e = (0.145)(50000)^2(0.1)^2 \text{x}10^{-4}$$

$$K_e = 362$$

Step No. 6 Calculate the core geometry, Kg .

$$K_g = \frac{P_t D_{max}}{K \rho_c} \quad [cm']$$

$$K_g = \frac{(47.5)(0.45)}{(362)(1,0)} \quad [cm^5]$$

$$K_g = 0.059 \quad [cm^5]$$

$$K_g = (O.\ 059)(1.25) = 0.0738 \quad [cm^5]$$

See Engineering Design Note No. 4 and 19.

Step No. 7 Select from Table 4.8 a ETD core comparable in core geometry Kg.

Core number	ETD-43434
Manufacturer	Magnetics Inc.
Magnetic material	I', μ_i = 2500
Magnetic path length	MPL = 7.91 cm
Window Height	G = 2.35 cm
Core weight	Wtfe = 40.0 grams
Copper weight	W_{tcu} = 46.6 grams
Mean length turn	MLT = 7.16 cm
Iron area	A_c = 0.915 cm^2
Window Area	W_a = 1.83 cm^2
Area Product	A_p = 1.67 cm4
Core geometry	Kg= ().0855 cm5
Surface area	At = 53.2 cm^2
Millihenrys per 1000 turns	mh = 1900

Step No. 8 Calculate the low line input current, I_{in}.

$$I_{in} = \frac{P_{in}}{V_{min}} \quad [amps]$$

$$I_{in} = \frac{(47.5)}{(118)} \quad [amps]$$

$$I_{in} = 0,403 \quad [amps]$$

Step No. 9 Calculate the primary rms current, I_{prms}.

$$I_{prms} = \frac{I_{in}}{\sqrt{D_{max}}} \quad [amps]$$

$$I_{prms} = \frac{(0.403)}{\sqrt{0.45}} \quad [amps]$$

$$I_{prms} = 0.600 \quad [amps]$$

Step No. 10 Calculate the primary voltage, V_p.

$$V_p = V_{in} - 2(I_{in}R_Q) \text{ [volts]}$$
$$V_p = 118 - 2((0.403)(0.40)) \text{ [volts]}$$
$$V_p = 117.7 \text{ [volts]}$$

Step No. 11 Calculate the number of primary turns, N_p.

$$N_p = \frac{V_p D_{max} x10^4}{f A_c \Delta B} \text{ [turns]}$$
$$N_p = \frac{(117,7)(0.45)X104}{(50000)(0.915)(0.1)} \text{ [turns]}$$
$$N_p = 115.8 \text{ use } N_p = 116 \text{ [turns]}$$

See Engineering design Note No. 2.

Step No. 12 Calculate the current density J using a window utilization $K_u = 0.32$.

$$J = \frac{2P_t \sqrt{D_{max}} x10^4}{\Delta B_m f A_p K_u} \text{ [amps / cm}^2\text{]}$$
$$J = \frac{2(47,5)\ (0.671)x104}{(0.1)(50000)(1.67)(0.32)} \text{ [amps / cm}^2\text{]}$$
$$J = 239 \text{ [amps / cm}^2\text{]}$$

Step No. 13 Calculate the required primary bare wire area, A_{wp}.

$$A_{wp} = \frac{I_p}{J} \text{ [cm}^2\text{]}$$
$$A_{wp} = \frac{0.600}{239} \text{ [cm}^2\text{]}$$
$$A_{wp} = 0.00251 \text{ [cm}^2\text{]}$$

Step No. 14 Calculate the skin depth, y. 'I'he skin depth will be the radius of the wire.

$$\gamma = \frac{6.62}{\sqrt{f}} \text{ [cm]}$$
$$\gamma = \frac{6.62}{\sqrt{50x10^3}} \text{ [cm]}$$
$$\gamma = 0.0296 \text{ [cm]}$$

See Engineering design Note No.].

Step No. 15 Calculate the wire area.

$$wire_A = \pi(\gamma)^2 \text{ [cm}^2\text{]}$$
$$wire_A = (3.14)(0.0296)^2 \text{[cm}^2\text{]}$$
$$wire_A = 0.00275 \text{ [cm}^2\text{]}$$

Step No. 16 Select a wire size with the required area from the wire Table 9.1. If the area is not within 10% of the required area, then go to the next smallest size.

$$AWG = \#\ 23$$
$$A_{w(B)} = 0.00259 \text{ [cm']}$$
$$\mu\Omega / cm = 666$$
$$Au, = 0.00314 \text{ [cm}^2\text{]} \text{ with insulation}$$

Step No. 17 Calculate the required number of primary strands, S_{np}, and the new $\mu\Omega/cm$.

$$S_{np} = \frac{A_{wp}}{wire_A \#\ 23}$$
$$S_{np} = \frac{(0.00251)}{(0.00259)}$$
$$S_{np} = 0.97 \text{ use } 1.0$$
$$(new)\mu\Omega / cm = \frac{\mu\Omega / cm}{S_{np}} = \frac{666}{1} = 666$$

See Engineering design Note No. 2.

Step No. 18 Calculate the primary winding resistance, R_p.

$$R_p = MLT(N_p)\left(\frac{\mu\Omega}{cm}\right)x10^{-6} \text{ [ohms]}$$
$$R_p = (7.1\ 6)(1\ 16)(666\ )x10\text{-G [ohms]}$$
$$R_p = 0.553 \text{ [ohms]}$$

Step No. 19 Calculate the primary copper loss, P_p.

$$P_p = I_p^2 R_p \text{ [watts]}$$
$$P_p = (0.600)^2(.553) \text{ [watts]}$$
$$P_p = 0.199 \text{ [watts]}$$

Step No. 20 Calculate the transformer secondary voltage, Vs.

$$V_s = \frac{V_o + V_d}{D_{max}} \text{ [volts]}$$

$$V_{s01} = \frac{(5.0+1)}{(0.45)} = 13.3 \text{ [volts]}$$

$$V_{s02} = \frac{(12.0+1)}{(0.45)} = 28.8 \text{ [volts]}$$

Step No. 21 Calculate the number of secondarys turns, N_{s01}.

$$N_{s01} = \frac{N_p V_{s01}}{V_p}\left(1+\frac{\alpha}{100}\right) \text{ [turns]}$$

$$N_{s01} = \frac{(116)(13,3)}{(117.7)}\left(1+\frac{0.5}{100}\right) \text{ [turns]}$$

$$N_{sol} = 13.2 \text{ use } N_{s01} = 13 \text{ [turns]}$$

See Engineering design Note No. 2.

Step No. 22 Calculate the secondary rms current, I_{s01}.

$$I_{s01} = I_{o01}\sqrt{D_{max}} \text{ [amps]}$$

$$I_{s01} = (2.0)\ \{0,45 \text{ [amps]}$$

$$I_{s01} = 1.34 \text{ [amps]}$$

Step No. 23 Calculate the secondary wire area, A_{ws01}.

$$A_{ws01} = \frac{I_{s01}}{J} \text{ [cm']}$$

$$A_{w01} = \frac{1.34}{239} \text{ [cm}^2\text{]}$$

$$A_{w01} = 0.00561 \text{ [cm}^2\text{]}$$

Step No. 24 Calculate the number of secondary strands, S_{ns01}, and the μΩ/cm.

$$S_{ns01} = \frac{A_{ws01}}{wire_A \# 23}$$

$$\text{“'SO'} = \frac{(0.00561)}{(0.00259)}$$

$$S_{ns01} = 2.16 \text{ use } 2$$

$$(new)\mu\Omega / cm = \frac{\mu\Omega / cm}{S_{ns01}} = \frac{666}{2} = 333$$

See Engineering design Note No. 2.

Step No. 25 Calculate the winding resistance, R_{s01}.

$$R_{s01} = MLT(N_{s01})\left(\frac{\mu\Omega}{cm}\right)x10^{-6} \text{ [ohms]}$$

$$R_{s01} = 7.16 \ (13)(333)x10\text{-C [ohms]}$$

$$R_{s01} = 0{,}0310 \text{ [ohms]}$$

Step No. 26 Calculate the secondary copper loss, P_{s01}.

$$P_{s01} = I_{s01}^2 R_{s01} \text{ [watts]}$$

$$P_{s01} = (1.34)^2(.031) \text{ [watts]}$$

$$P_{s01} = 0.0557 \text{ [watts]}$$

Step No. 27 Calculate the number of secondary turns, N_{s02}.

$$N_{s02} = \frac{N_p V_{s02}}{V_p}\left(1 + \frac{\alpha}{100}\right) \text{ [turns]}$$

$$N_{S02} = \frac{(116)(28.8)}{(117.7)(100)} \sim + .. !! \text{ [turns]}$$

$$N_{s02} = 28.7 \text{ use } N_{s02} = 29 \text{ [turns]}$$

See Engineering design Note No. 2.

Step No. 28 Calculate the secondary rms current, I_{s02}.

$$I_{s02} = I_{o02}\sqrt{D_{max}} \text{ [amps]}$$

$$I_{s02} = (2.0)\sqrt{0.45} \text{ [amps]}$$

$$I_{s02} = 1.34 \text{ [amps]}$$

Step No. 29 Calculate the secondary wire area, A_{ws02}.

$$A_{ws02} = \frac{I_{s02}}{J} \quad [\text{cm}^2]$$

$$A_{w02} = \frac{1.34}{239} [\text{cm}^2]$$

$$A_{w02} = 0.00561 \ [\text{cm}^2]$$

Step No. 30 Calculate the number of secondary strands, S_{ns02}, and the $\mu\Omega/\text{cm}$.

$$S_{ns02} = \frac{A_{ws02}}{wire_A \# 23}$$

$$S_{ns02} = \frac{(0.00561)}{(0.00259)}$$

$$S_{ns02} = 2{,}16 \text{ use } 2$$

$$(new)\mu\Omega / cm = \frac{\mu\Omega / cm}{S_{ns02}} = \frac{666}{2} = 333$$

See Engineering design Note No. 2.

Step No. 31 Calculate the winding resistance, R_{s02}.

$$R_{S02} = MLT\left(N_{s02}\right)\left(\frac{\mu\Omega}{cm}\right)x10^{-6} \quad [\text{ohms}]$$

$$R_{s02} = 7.16(29)(333)x1\ 0^{-6} \quad [\text{ohms}]$$

$$R_{s02} = 0.0691 \quad [\text{ohms}]$$

Step No. 32 Calculate the secondary copper loss, P_{s02}.

$$P_{s02} = I_{s02}^2 R_{s02} \quad [\text{watts}]$$

$$P_{s02} = (1.34)^2(.0691) \quad [\text{watts}]$$

$$P_{s02} = 0.124 \ [\text{watts}]$$

Step No. 33 Calculate the window utilization, K_u.

$$[\text{turns}] = (N_p S_{np}) = (116) \ [\text{primary}]$$
$$[\text{turns}] = (N_{s01} S_{ns01}) = (26) \ [\text{secondary}]$$
$$[\text{turns}] = (N_{s02} S_{ns02}) = (58) \ [\text{secondary}]$$
$$N_t = 200 \text{ turns } \# \ 23$$
$$K_u = \frac{N_t A_w}{W_a}$$
$$K_u = \frac{(200)(0.00259)}{(1.83)}$$
$$K_u = 0.283$$

Step No. 34 Calculate the total copper loss, P_{cu}.

$$P_{cu} = P_p + P_{s01} + P_{s02} \quad [\text{watts}]$$
$$P_{cu} = (0{,}199)+(0.0557)+(0.124) \quad [\text{watts}]$$
$$P_{cu} = 0.379 \quad [\text{watts}]$$

Step No. 35 Calculate the regulation, a, for this design.

$$\alpha = \frac{P_{cu}}{P_o} \text{x}100 \quad [\%]$$
$$\alpha = \frac{(0.379)}{(38)} \text{x}100 \quad [\%]$$
$$\alpha = 0.997 \quad [\%]$$

Step No. 36 Calculate the watts per kilogram, WK.

$$WK = 3.18\text{x}10^{-4} (f)^{(1.51)} \left(\frac{\Delta B_{ac}}{2}\right)^{(2747)} \quad [\text{watts / kilogram}]$$
$$WK = (3{,}18 \ \text{x}10^{-4})(50000)^{(1.51)}(0.050)^{(2.747)} \quad [\text{watts/ kilogram}]$$
$$WK = 1.056 \quad [\text{watts/ kilogram}] \text{ or } \{\text{milliwatts/ gram}]$$

Step No. 37 Calculate the core loss, P_{fe}.

$$P_{fe} = \left(\frac{\text{milliwatts}}{\text{gram}}\right) W_{tfe} \text{x}10^{-3} \quad [\text{watts}]$$
$$P_{fe} = (1.056)(60)\text{x}10^{-3} \ [\text{watts}]$$
$$P_{fe} = 0.0634 \ [\text{watts}]$$

Step No, 38 Calculate the total 10SS, core P_{fe} and copper, P_{cu} in watts P_{Σ}.

$$P_{\Sigma} = P_{fe} + P_{cu} \quad \text{[watts]}$$
$$P_{\Sigma} = (0.0634) + - \ (0{,}379) \quad \text{[watts]}$$
$$P_{\Sigma} = 0{,}442 \quad \text{[watts]}$$

Step No. 39 Calculate the watt density. λ.

$$\lambda = \frac{P_{\Sigma}}{A_t} \quad [\text{watts} / \text{cm}^2]$$
$$\lambda = \frac{0.442}{53.16} \quad [\text{watts} / \text{cm}^2]$$
$$\lambda = 0.0083 \quad [\text{watts} / \text{cm}^2]$$

Step No. 4(I Calculate the temperature rise in degrees C.

$$T_r = 450(\lambda)^{(0{,}82)} \quad [\text{degrees C}]$$
$$T_r = 450(0.0083)^{(0.826)} \quad [\text{degrees C}]$$
$$T_r = 8.6 \quad [\text{degrees C}]$$

Design Summary

Core Part Number	ETD-43434
Magnetic Material	P Ferrite
Frequency	50kHz
Flux Density	0.1 -I'
Core Loss	0.0634 w
Permeability	2500
Millihenrys per 1 K Turns	19oo
Window Utilization Ku	0.283

Winding Number	1	2	3
AWG	23	23	23
Strands	1	2	2
Total Turns	116	13	29
Taps	None	None	None
Resistance Ω	0.553	0.031	0.0691
Copper Loss	0.199 w	0.0557 w	0.124 W

306
Weinberg Converter Design using a Ferrite Core

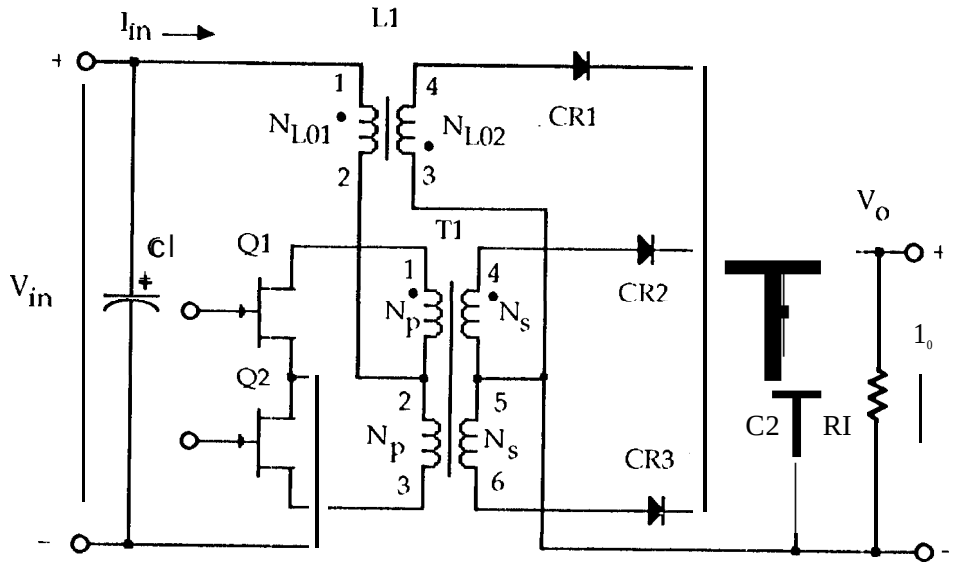

Figure 3.6 Weinberg current-fed converter.

Weinberg Converter Transformer Design Specification

1. input voltage ..... V_{min} = 24 volts
2. input voltage ..... V_{norm} = 28 volts
3. Input voltage ..... V_{max} = 35 volts
4. Output voltage (center tapped) ..... V_o = 28 volts
5. Output current ..... $I_{o(max)}$ = 1.5 amps
6. Output current ..... $I_{o(min)}$ = 0.15 amps
7. Frequency ..... f = 50 kHz
8. Regulation ..... α = 0.5 %
9. Efficiency ..... η = 97 %
10. Operating flux density ..... B_m = 0.1 tesla
11. Transistor on resistance ..... R_Q = 0.10 ohms
12. Diode voltage drop ..... V_d = 1.0 volt

This design example operates in conjunction with design example 307.

Step No. 1 Calculate the total period, T.

$$T = \frac{1}{f} \quad \text{[seconds]}$$

$$T = \frac{1}{50000} \quad \text{[seconds]}$$

$$T = 20 \ [\mu\text{sec}]$$

Step No. 2 Calculate the maximum on time, t_{on}.

$$t = \frac{T}{2} \quad [\mu\text{sec}]$$

$$t_{on(\max)} = \frac{20}{2} \quad [\mu\text{sec}]$$

$$t_{on(\max)} = 10 \quad [\text{j/see}]$$

Step No. 3 Calculate the maximum duty ratio, $D_{(max)}$.

$$D_{\max} = \frac{t_{on}}{T}$$

$$D_{\max} = \frac{10}{20}$$

$$D_{\max} = 0.5$$

Step No. 4 Calculate the maximum secondary power, P_{ts}.

$$P_o = I_o(V_o + V_d) \quad \text{[watts]}$$

$$P_o = (1.5)(28+1) \quad \text{[watts]}$$

$$P_o = 43.5 \quad \text{[watts]}$$

Step No. 5 Calculate the apparent power, P_t.

$$P_t = P_o\left(\frac{\sqrt{2}}{\eta} + \sqrt{2}\right) \quad \text{[watts]}$$

$$P_t = 43.5\left(\frac{1.41}{0.97} + 1.41\right) \quad \text{[watts]}$$

$$P_t = 124.6 \quad \text{[watts]}$$

0

Step No, 6 Calculate the electrical conditions, K_e.

$$K_e = 0.145(K_f)^2(f)^2(B_m)2x10\text{-}4$$

$$K_e = (0.145)(4.0)2(50000)2(0.1)2X10\text{-}4$$

$$K_e = 5800$$

Step No. 7 Calculate the core geometry, Kg

$$K_g = \frac{P_t}{2K_e\alpha} \quad [cm^5]$$

$$K_g = \frac{(124,6)}{2(5800)(0.5)} \quad [cm']$$

$$Kg = 0.0215 \quad [cm^5]$$

$$K_g = (0.0215)(1.25) = 0.0268 \quad [cm^5]$$

See Design Engineering Note No. 19.

Step No. 8 Select from Table 4. an EFD core comparable in core geometry Kg.

Core number	EFD-30
Manufacturer	Philips Comp.
Magnetic material	3C85, μ_i = 1800
Magnetic path length	MPL = 6.81 cm
Window height	G = 2,24 cm
Core weight	Wtf_e = 24.0 grams
Copper weight	W_{tcu} = 16.96 grams
Mean length turn	MLT = 5.46 cm
iron area	A_c = 0.690 cm^2
Window area	W_a = 0.874 cm^2
Area product	A_p = 0.603 cm^4
Core geometry	K_g = 0.0.305 cm^5
Surface area	A_t = 28.9 cm^2
Millihenrys per 1000 turns	rnh = 1900

Step No. 9 Calculate the secondary load power, 1'..

$$PO = I_o(V_o - t\,V_d) \text{ [watts]}$$

$$PO = (1.5)\ (28\text{-}t\ 1) \text{ [watts]}$$

$$P_o = 43.5 \quad \text{[watts]}$$

Step No. 10 Calculate the current density J using a window utilization, $K_u = 0.32$.

$$J = \frac{P_t x10^4}{K_f\ K_u B_m f A_p} \text{ [amps / cm']}$$

$$J = \frac{(124.6)x10^4}{(4.0)(0.32)(0.1)(50000)(0.603)} \text{ 'amps / cm']}$$

$$J = 323 \text{ [amps/ cm']}$$

Step No. 11 Calculate the input current, $I_{in(max)}$ at 0.75 of $V_{in(min)}$.

$$I_{in} = \frac{P_o}{0.75 V_p \eta} \text{ [amps]}$$

$$I_{in} = \frac{43.5}{(0.75)(24)(0.97)} \text{ [amps]}$$

$$I_{in} = 2.49 \text{ [amps]}$$

See Engineering Design Note No.26 and 29,

Step No. 12 Calculate the transistor voltage drop, V_Q at $I_{in(max)}$.

$$V_Q = I_{in(max)} R_Q \text{ [volts]}$$

$$V_Q = (2.49)(0.1) \text{ [volts]}$$

$$V_Q = 0.249 \text{ [volts]}$$

Step No. 13 Calculate the transformer center tap voltage, V_{ct}.

$$V_{ct} = V_{min}(0.75) - V_Q \text{ [volts]}$$

$$V_{ct} = 24(0.75) - 0.249 \text{ [volts]}$$

$$V_{ct} = 17.7 \text{ [volts]}$$

Step No. 14 Calculate the transformer turns ratio, N_p/N_s

$$n = \frac{N_P}{N_s} = \frac{V_{ct}}{(V_o + V_d)}$$

$$n = \frac{N_p}{N_s} = \frac{17.7}{(28 + 1.0)}$$

$$n = \frac{N_p}{N_s} = 0.61$$

Step No. 15 Calculate the primary turns, N_p.

$$N_p = \frac{V,JX104}{K_f B_m f A_c} \quad [\text{turns}]$$

$$N_p = \frac{(17.7)X10^4}{(4.0)(0.1)(50000)(0.690)} \quad [\text{turns}]$$

$$N_p = 12.8 \text{ use } N_p = 13 \quad [\text{turns}]$$

See Engineering Design Note No. 2.

Step No. 16 Calculate the primary rms current I_{rms}.

$$I_{p(rms)} = I_{pk}\sqrt{D_{max}} \quad [\text{amps}]$$

$$I_{p(rms)} = 2.49\sqrt{0.5} \quad [\text{amps}]$$

$$I_{p(rms)} = 1.76 \quad [\text{amps}]$$

See Engineering Design Note No. 21.

Step No. 17 Calculate the primary wire area, A_{wp}.

$$A_{wp} = \frac{I_{p(rms)}}{J} \quad [\text{cm}^2]$$

$$A_{wp} = \frac{1.76}{323} \quad [\text{cm}^2]$$

$$A_{wp} = 0.00545 \quad [\text{cm}^2]$$

Step No. 18 Calculate the skin depth, γ. The skin depth will be the radius of the wire.

$$\gamma = \frac{6.62}{\sqrt{f}} \quad [\text{cm}]$$

$$\gamma = \frac{6.62}{\sqrt{50x10^3}} \quad [\text{cm}]$$

$$\gamma = 0.0296 \quad [\text{cm}]$$

See Engineering Design Note No. 1.

Step No. 19 Calculate the wire area.

$$wire_A = \pi(\gamma)^2 \quad [\text{cm}^2]$$

$$wire_A = (3.14)(0.0296)2 \quad [\text{cm}^2]$$

$$wire_A = 0.00275 \quad [\text{cm}^2]$$

Step No. 2(I Select a wire size with the required area from the wire Table 9.1. If the area is not within 10% of the required area, then go to the next smallest size,

$$AWG = \#23$$

$$A_{w(B)} = 0.00259 \ [cm^2]$$

$$\mu\Omega / cm = 666$$

$$A_w = 0.00314 \ [cm^*] \ \text{with insulation}$$

Step No. 21 Calculate the required number of primary strands, S_{np}, and the new $\mu\Omega/cm$.

$$s_{np} = \frac{A_{wp}}{wire_A \# 23}$$

$$S_{np} = \frac{(0.00545)}{(0.00259)}$$

$$s_{np} = 2.1 \text{ use } 2$$

$$(new)\mu\Omega / cm = \frac{\mu\Omega / cm}{S_{np}} = \frac{666}{2} = 333$$

See Engineering Design Note No. 2.

Step No. 22 Calculate the primary winding resistance, R_p.

$$R_p = MLT(N_p)\left(\frac{\mu\Omega}{cm}\right) x10^{-6} \ [ohms]$$

$$R_p = 5.46 \ (13)(333)x10\text{-}G \ [ohms]$$

$$R_p = 0, \ 0236 \ [ohms]$$

Step No. 23 Calculate the primary copper loss, P_p.

$$P_p = I^2_{p(rms)} R \ [watts]$$

$$P_p = (1.49)^2(.0236) \ [watts]$$

$$P_p = 0.0524 \ [watts]$$

Step No. 24 Calculate the secondary turns, Ns, each side of center tap.

$$N_s = \frac{N_p(V_{01} + V_d)}{V_p}\left(1 + \frac{\alpha}{100}\right) [turns]$$

$$N_s = \frac{13(28 + 1)}{17.7}\left(1 + \frac{0.5}{100}\right) [turns]$$

$$N_{s1} = 21.4 \text{ use } 22 \ [turns]$$

See Engineering Design Note No. 2.

Step No. 25 Calculate the secondary rms current, I_{rms}.

$$I_{s(rms)} = I_{pk}\sqrt{D_{max}} \quad \text{[amps]}$$
$$I_{s(rms)} = 1.5\sqrt{0.5} \quad \text{[amps]}$$
$$I_{s(rms)} = 1.06 \quad \text{[amps]}$$

See Engineering Design Note No. 21.

Step No. 26 Calculate the secondary wire area, A_{WS}.

$$A_{ws} = \frac{I_{s(rms)}}{J} \quad [\text{cm}']$$
$$A_{ws} = \frac{1.06}{323} \quad [\text{cm}^2]$$
$$A_{ws} = 0.00328 \quad [\text{cm}^2]$$

Step No. 27 Calculate the required number of strands, S_{ns01}, and the $\mu\Omega$/cm.

$$S_{ns} = \frac{A_{ws}}{\#\,23} = \frac{(0.00328)}{(0.00259)} = 1.27 \quad \text{use } 1$$
$$(new)\mu\Omega / cm = \frac{\mu\Omega / cm}{S_{ns}} = \frac{666}{1} = 666$$

See Engineering Design Note No. 2.

Step No. 28 Calculate the secondary winding resistance, R_S.

$$R, = MLT(N_s)\left(\frac{\mu\Omega}{cm}\right)\text{x}10^{-6} \quad \text{[ohms]}$$
$$\text{R, = 5.46(22)(666)x10-b [ohms]}$$
$$R_s = 0.08 \quad \text{[ohms]}$$

Step No. 29 Calculate the secondary copper loss, 1's.

$$P_s = I^2_{s(rms)}R \quad \text{[watts]}$$
$$P_s = (1.5)^2(.08) \quad \text{[watts]}$$
$$\text{P, = 0.180 [watts]}$$

Step No. 30 Calculate the window utilization, Ku.

$$[\text{turns}] = 2(N_p S_{np}) = 2(26) = 52 \text{ [primary]}$$

$$[\text{turns}] = 2(N_s S_{ns}) = 2(22) = 44 \text{ [secondary]}$$

$$N_{\#23} = 96 \text{ turns, } \#23$$

$$K_u = \frac{N_{\#23} A_w}{W_a}$$

$$K_u = \frac{(96)(0.00259)}{(0.874)}$$

$$K_u = 0,284$$

Step No. 31 Calculate the total copper loss, P_{cu}.

$$P_{cu} = P_p + P, \text{ [watts]}$$

$$P_{cu} = (0.0524) + (0.180) \text{ [watts]}$$

$$P_{cu} = 0.232 \text{ [watts]}$$

Step No. 32 Calculate the regulation α for this design.

$$\alpha = \frac{P_{cu}}{P_o} \times 100 \text{ [\%]}$$

$$\alpha = \frac{0.232}{43.5} \times 100 \text{ [\%]}$$

$$\alpha = 0.534 \text{ [\%]}$$

Step No. 33 Calculate the flux density, B_m.

$$B_m = \frac{V_p \times 10^4}{K_f f A_c N_p} \text{ [tesla]}$$

$$B_m = \frac{(17.7) \times 104}{(4.0)(50000)(0.690)(13)} \text{ [tesla]}$$

$$B_m = 0.098 \text{ [tesla]}$$

Step No. 34 Calculate the watts per kilogram, WK, using P material Figure 4.1.

$$WK = 3.18 \times 10^{-4} (f)^{(1.51)} (B_{ac})^{(2.747)} \text{ [watts / kilogram]}$$

$$WK = 3.18 \times 10^{-4} (50000)^{(1.51)} (0.098)^{(2.747)} \text{ [watts / kilogram]}$$

$$WK = 6.69 \text{ [watts/ kilogram]}$$

Step No. 35 Calculate the core loss, P_{fe}

$$P_{fe} = \left(\frac{\text{milliwatts}}{\text{gram}}\right) W_{tfe} x10^{-3} \quad \text{[watts]}$$

$$P_{fe} = (6.69)(24)x1\ 0^{-3} \quad \text{[watts]}$$

$$P_{fe} = 0{,}161 \quad \text{[watts]}$$

Step No. 36 Calculate the total loss, core P_{fe} and copper, P_{cu} in watts P_{Σ}.

$$P_{\Sigma} = P_{fe} + P_{cu} \quad \text{[watts]}$$

$$P_{\Sigma} = (0.161)+-\ (0.232) \quad \text{[watts]}$$

$$P_{\Sigma} = 0{,}393 \quad \text{[watts]}$$

Step No. 37 Calculate the watt density, λ.

$$\lambda = \frac{P_{\Sigma}}{A_t} \quad \text{[watts /cm']}$$

$$\lambda = \frac{0.393}{28.9} \quad \text{[watts / cm']}$$

$$A = 0.0136 \quad \text{[watts/ cm']}$$

Step No. 38 Calculate the temperature rise in degrees C.

$$T_r = 450(\lambda)^{(0.826)} \quad \text{[degrees C]}$$

$$T_r = 450(0.0136)^{(0.826)} \quad \text{[degrees C]}$$

$$T_r = 12.9 \quad \text{[degrees C]}$$

Design Summary

Core Part Number	EFD-30
Magnetic Material	Philips 3C85
Frequency	50kHz
Flux Density	0.0987'
Core Loss	0.161 w
Permeability	18(KI
Mill ihenriys per 1 K Turns	190(I
Window Utilization Ku	0.284

Winding Number	1	2
AWG	23	23
Strands	2	1
Total Turns	26	44
Taps	Center	Center
Resistance Ω	0.0236	0.080
Copper Loss	0.0524 W	0.180 w

Weinberg Input Inductor Design using a MPP Powder Core

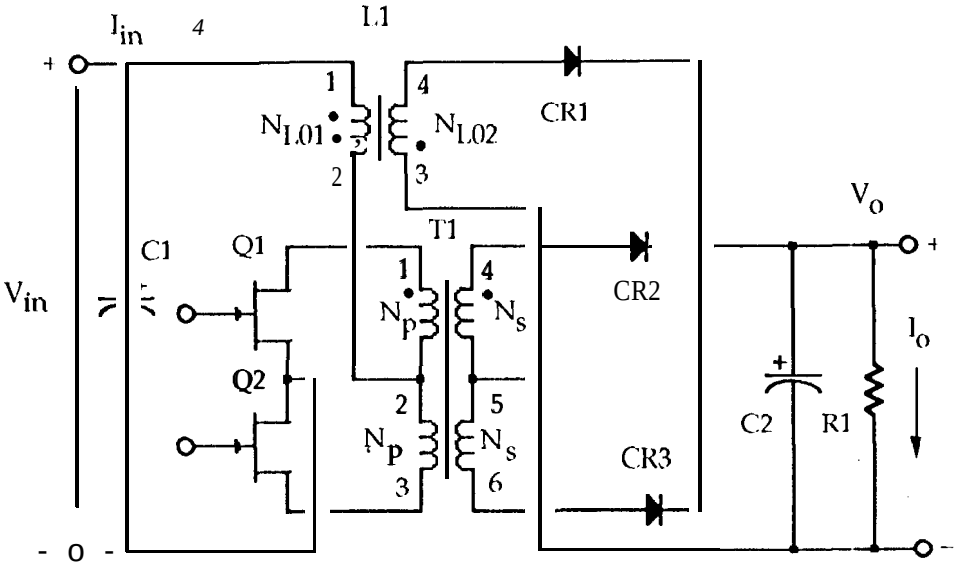

Figure 3.7 Weinberg current-fed converter.

Weinberg Converter Input Inductor Design Specification

1.	input voltage	V_{min} = 22 volts
2.	input voltage	V_{nom} = 28 volts
3.	Input voltage	V_{max} = 35 volts
4.	Output voltage	¥28 volts
5.	Output current	$I_{o(max)}$ = 1.5 amps
6.	Output current	$I_{o(min)}$ = .15 amps
7.	Primary turns	N_{1-2} = 13
8.	Secondary turns	N_{3-4} =22
9.	Working window utilization	K_u = 0.2
10.	Final window utilization	K_u = 0.4
11.	Frequency	f = 100 kHz
12.	Converter efficiency	η = 90 %
13.	Regulation	α = 1.0 %
14.	Operating flux density	Bm = 0.25 tesla
15.	Maximum input current	I(max) = 2.68 amps

This design example operates in conjunction with design example 306.

This design procedure will work equally well with all of the various powder cores. Care must be taken regarding maximum flux density with different materials.

Step No. 1 Calculate the total period, T.

$$T = \frac{1}{f} \text{ [seconds]}$$

$$T = \frac{1}{100000} \text{ [seconds]}$$

$$T = 10 \text{ [}\mu\text{sec]}$$

Step No. 2 This fed inductor will have the same turns ratio as the transformer in design example 306.

$$\frac{N_{1-2}}{N_{3-4}} = \frac{N_p}{N_s}$$

$$\frac{N_{1-2}}{N_{3-4}} = \frac{13}{22} = 0.59$$

Step No. 3 Calculate the minimum duty ratio, D_{min}.

$$D_{min} = \left(\frac{(V_o + V_d)}{V_{in(max)}} \cdot \frac{N_p}{N_s} \right)$$

$$D_{min} = \left(\frac{(28 + 1.0)}{35} \cdot \frac{13}{22} \right)$$

$$D_{min} = 0.490$$

Step No. 4 Calculate the minimum transistor on time, $t_{on(min)}$.

$$t_{on(min)} = TD_{min} \text{ [}\mu\text{sec]}$$

$$t_{on(min)} = (10)(0.49) \text{ [}\mu\text{sec]}$$

$$t_{on(min)} = 4.9 \text{ [}\mu\text{sec]}$$

Step No. 5 Calculate the minimum inductance, L_{1-2}.

$$L_{1-2} = \frac{T(V_o + V_d)(1 - D_{min})}{2I_{o(min)}} \cdot \left[\frac{N_{1-2}}{N_{3-4}} \right]^2 \text{ [henrys]}$$

$$L_{1-2} = \frac{10(28 + 1.0)(0.51)}{2(0.15)} \cdot \left(\frac{13}{22} \right)^2 \text{ [henrys]}$$

$$L_{1-2} = 172 \text{ [}\mu\text{h]}$$

Step No. 6 Calculate the primary inductance L_p of the transformer, T1.

$$L_p = L_{1000} N\ 2X1\ 0^{-6} [\text{millihenrys}]$$

$$L_{1000} = \text{millihenrys per 1000 turns}$$

$$L_p = (1900)(13)2\ \text{xl}\ 0^{-6} [\text{millihenrys}]$$

$$L_p = 0.321\ [\text{millihenrys}]$$

Step No. 7 Calculate the peak current, I_{pk}, in winding 1-2 of 1.1.

$$I_{pk} = \left(I_{o(\max)} \frac{N_{3-4}}{N_{1-2}}\right) + \frac{1}{2}\left\{\frac{V_{in(\max)} - (V_o + V_d)}{L_{1-2}}\left(\frac{N_{1-2}}{N_{3-4}}\right) + \frac{V_o}{L_p}\left(\frac{N_{1-2}}{N_{3-4}}\right)\right\} t_{on(\min)} \quad [\text{amps}]$$

$$I_{pk} = \left((1.5)\frac{22}{13}\right) + \frac{1}{2}\left\{\frac{35-(28+1.0)}{172\text{x}10^{-6}}\left(\frac{13}{22}\right) + \frac{28}{321\text{x}10^{-6}}\left(\frac{13}{22}\right)\right\} 4.9\text{x}10^{-6} \quad [\text{amps}]$$

$$I_{pk} = 2{,}72\ [\text{amps}]$$

Step No. 8 Calculate the energy-handling capability in watt-seconds, w-s.

$$ENG = \frac{LI_{pk}^2}{2} \quad [\text{w - s}]$$

$$ENG = \frac{(172\text{x}10^{-6})(2.72)^2}{2} \quad [\text{w - s}]$$

$$ENG = 0.000636\ [\text{w -s}]$$

Step No. 9 Calculate the electrical conditions, K_e.

$$K_e = 0.145\left(\frac{P_o}{\eta}\right) B_m^2 \text{x}10^{-4}$$

$$K_e = (0.145)\left(\frac{43.5}{0.9}\right)(0.25)2\text{X}10\text{-}4$$

$$K_e = 0.0000438$$

Step No. 10 Calculate the core geometry, K_g. Kg will be increased by a factor of 2 to account for the two windings on the inductor L1.

$$K_g = \frac{2(ENERGY)^2}{K_e \alpha} \quad [\text{cm}^5]$$

$$K_g = \frac{(0.000636)^2}{(0.0000438)(1.0)} \quad [\text{cm}^5]$$

$$K_g = 0.0185\ [\text{cm}^5]$$

See Engineering Design Note No. 27.

Step No. 11 Select from Table 6.1a MPP powder core comparable in core geometry Kg

Core number	MP-55059
Manufacturer	Magnetics Inc.
Magnetic path length	MPL = 5.67 cm
Core weight	Wtfe = 16 grams
Copper weight	W_{tcu} = 15.4 grams
Mean length turn	MLT= 3.05 cm
Iron area	$A_c = 0.328\ cm^2$
Window Area	$W_a = 1.423\ cm^2$
Area Product	$A_p = 0.4674\ cm^4$
Core geometry	Kg= 0.02015 cm^5
Surface area	At= 27.5 cm^2
Core Permeability	mu = 60
Millihenrys per 1000 turns	mh = 43

Step No. 12 Calculate the number of primary turns, N_{L1}.

$$N_{1-2} = 1000\sqrt{\frac{L_{(new)}}{L_{(1000)}}} \quad \text{[turns]}$$

$$N_{1-2} = 1000\sqrt{\frac{.172}{43}} \quad \text{[turns]}$$

$$N_{1-2} = 63 \quad \text{[turns]}$$

Step No. 13 Calculate the current density, J, using a window utilization Ku = 0.2.

$$J = \frac{2(ENG)x10^4}{B_m A_p K_u} \quad \text{[amps / cm}^2\text{]}$$

$$J = \frac{2(0.00636)X104}{(0.25)(0.467)(0.20)} \quad \text{[amps / cm}^2\text{]}$$

$$J = 545 \quad \text{[amps/ cm}^2\text{]}$$

See Engineering Design Note No. 27.

Step No. 14 Calculate the required incremental permeability, $\Delta\mu$.

$$\Delta\mu = \frac{(B_m)(MPL)x10^4}{0.4\pi(W_a)(J)(K_u)}$$

$$\Delta\mu = \frac{(.25)(5.67)x10^4}{(1.256)(1.423)(545)(0.2)}$$

$$\Delta\mu = 72.7 \text{ use } 60$$

See Engineering Design Note No. 8 and 18.

Step No. 15 Calculate the peak flux density. B_m.

$$B_m = \frac{0.4\pi(N_p)(I_{pk})(\Delta\mu)x10^{-4}}{MPL} \quad [\text{tesla}]$$

$$B_m = \frac{1.256(63)(2.72)(60)x10^{-4}}{(5.67)} \quad [\text{tesla}]$$

$$B_m = 0.228 \quad [\text{tesla}]$$

Step No. 16 Calculate the primary wire area, $A_{pw(B)}$, using input current, $I_{p(max)}$. This current comes from design example 306.

$$A_{pw(B)} = \frac{I_{p(max)}}{J} [\text{cm}^2]$$

$$A_{pw(B)} = \frac{2.68}{545} \quad [\text{cm}^2]$$

$$A_{pw(B)} = 0.00492 \quad [\text{cm}^2]$$

See Engineering Design Note No. 26 and 29.

Step No. 17 Select a wire size with the required area from the wire Table 9.1. If the area is not within 10% of the required area then go to the next smallest size.

$$A_{WG} = \#20$$

$$A_{w(B)} = 0.00519 \quad [\text{cm}^2]$$

$$\mu\Omega / cm = 332$$

See Engineering Design Note No. 11.

Step No. 18 Calculate the primary winding resistance, R_p.

$$R_p = MLT(N_p)\left(\frac{\mu\Omega}{cm}\right)x10^{-6} \quad [\text{ohms}]$$

$$R_p = (3.05)(63)(332)x10^{-6} \quad [\text{ohms}]$$

$$R_p = 0.0638 \quad [\text{ohms}]$$

Step No. 19 Calculate the primary copper loss, P_p.

$$P_p = I_p^2 R_p \quad [\text{watts}]$$

$$P_p = (2.68)^2(.0638) \quad [\text{watts}]$$

$$P_p = 0.458 \quad [\text{watts}]$$

Step No, 20 Calculate the secondary turns, NL2

$$N_{3-4} = \frac{N_{1-2}N_s}{N_p} \text{ [turns]}$$

$$N_{3-4} = \frac{(63)(22)}{13} \text{ [turns]}$$

$$N_{3-4} = 107 \text{ [turns]}$$

Step No. 21 Calculate the maximum secondary rms current, I_{srms}.

$$I_{s(rms)} = I_{pk}\sqrt{(1 - D_{min})} \text{ [amps]}$$

$$I_{s(rms)} = 1.5\sqrt{(1 - 0.49)} \text{ [amps]}$$

$$I_{s(rms)} = 1.07 \text{ [amps]}$$

Step No. 22 Calculate the inductor secondary wire area, $A_{SW(B)}$.

$$A_{SW(R)} = \frac{I_{s(rms)}}{J} \text{ [cm']}$$

$$A_{sw} = \frac{1.07}{545} \text{ [cm']}$$

$$A_{sw} = 0.00196 \text{ [cm']}$$

Step No. 23 Select a wire size with the required area from the wire Table 9.1. If the area is not within 10% of the required area, then go to the next smallest size.

$$AWG = \#24$$

$$A_{sw02} = 0.002047 \text{ [cm}^2\text{]}$$

$$\mu\Omega / cm = 842$$

Step No. 24 Calculate the inductor secondary winding resistance, R_S.

$$R_s = MLT(N_{s01})\left(\frac{\mu\Omega}{cm}\right) x10^{-6} \text{ [ohms]}$$

$$R_s = 3.05(107)(842)x10\text{-G} \text{ [ohms]}$$

$$R_s = 0,\ 275 \text{ [ohms]}$$

Step No. 25 Calculate the inductor secondary copper loss, P_S.

$$P_s = I^2_{s(rms)}R_s \text{ [watts]}$$

$$P, = (1.07)^2(.275) \text{ [watts]}$$

$$P_s = 0.315 \text{ [watts]}$$

Step No. 26 Calculate the inductor max. primary rms current, I_{prms}, at minimum duty ratio, D_{min}.

$$I_{p(rms)} = I_{pk}\sqrt{D_{min}} \quad \text{[amps]}$$
$$I_{p(rms)} = 2.68\sqrt{0.49} \quad \text{[amps]}$$
$$I_{p(rms)} = 1.88 \quad \text{[amps]}$$

Step No. 27 Calculate the inductor primary copper loss, T'_p, at minimum duty ratio, D_{min}.

$$P_p = I^2_{p(rms)} R_p \quad \text{[watts]}$$
$$P_p = (1.88)^2(.0638) \quad \text{[watts]}$$
$$P_p = 0.225 \quad \text{[watts]}$$

Step No. 28 Calculate the window utilization, K_u.

$$A_{wt} = NA_w \, [\text{cm}^2]$$
$$A_{wtp} = N_p A_{wp} \quad [\text{cm}^2]$$
$$A_{wtp} = (63)(0.00519) = 0.327 \quad [\text{cm*}]$$
$$A_{wts} = N_s A_{ws} \, [\text{cm}^2]$$
$$A_{wts} = (107)(0.00205) = 0.219 \quad [\text{cm}^2]$$
$$K_u = \frac{A_{wtp} A_{wts}}{W_a}$$
$$K_u = \frac{(0.327) + (0.219)}{(1.423)}$$
$$K_u = 0.384$$

Step No. 29 Calculate the total copper loss, P_{cu}.

$$P_{cu} = P_p + P, \quad \text{[watts]}$$
$$P_{cu} = (0,225) + - \ (0.315) \quad \text{[watts]}$$
$$P_{cu} = 0.540 \quad \text{[watts]}$$

Step No. 30 Calculate the regulation, α, for this design.

$$\alpha = \frac{P_{cu}}{P_o} \text{ Xloo } [\%]$$
$$\alpha = \frac{(0.540)}{(48.3)} \text{ x100 } [\%]$$
$$\alpha = 1.12 \quad [\%]$$

Step No. 31 Calculate the peak magnetizing force in oersteds, H.

$$H = \frac{(0.4\pi)N_p I_{pk}}{MPL} \quad \text{[oersteds]}$$

$$H = \frac{(0.4\pi)(63)(2.68)}{5.67} \quad \text{[oersteds]}$$

$$H = 37.4 \text{ [oersteds]}$$

Step No. 32 Calculate the primary delta current, ΔI, at $V_{in(max)}$.

$$\Delta I = \frac{TV_{in(\max)}(1 - D_{\min})}{L} \quad \text{[amps]}$$

$$\Delta I = \frac{(1\ \text{OX1O-'})(35)(1 - 0.49)}{172\text{x}10^{-6}} \quad \text{[amps]}$$

$$\text{Al} = 1.04 \text{ [amps]}$$

Step No. 33 Calculate the, Bat, flux density tesla.

$$B_{ac} = \frac{0.4\pi(N_{1-2})(\Delta I)\Delta\mu\text{x}10^{-4}}{MPL} \quad \text{[tesla]}$$

$$B_{ac} = \frac{(1.256)(63)(1.04)(60)}{5.67}\text{x}10^{-4} \quad \text{[tesla]}$$

$$B_{ac} = 0.0871 \text{ [tesla]}$$

Step No. 34 Calculate the watts per kilogram, WK.

$$WK = O.00391(f)^{(1.28)}\left(\frac{B_{ac}}{2}\right)^{(2.14)} \quad \text{[watts / kilogram]}$$

$$WK = 0.00391(50000)^{(1.28)}(0.0435)^{(2.14)} \text{ [watts/ kilogram]}$$

$$WK = 4.94 \text{ [watts/kilogram] or [milliwatts /gram]}$$

Step No. 35 Calculate the core loss, P_{fe}.

$$P_{fe} = \left[\frac{\text{milliwatts}}{\text{gram}}\right] W_{tfe}\text{x}1\ 0^{-3} \text{ [watts]}$$

$$P_{fe} = (4{,}94\ )(16)\text{x}10\text{-a [watts]}$$

$$P_{fe} = 0.079 \text{ [watts]}$$

Step No. 36 Calculate the total loss core ,P_{fe}, and copper P_{cu}.

$$P_{\Sigma} = P_{fe} + P_{cu} \text{ [watts]}$$
$$P_{\Sigma} = (0{,}079) + (0.540) \text{ [watts]}$$
$$P_{\Sigma} = 0.619 \text{ [watts]}$$

Step No, 37 Calculate the watt density, λ.

$$A == \frac{P_{\Sigma}}{A_t} \text{ [watts/ cm}^2\text{]}$$
$$\lambda = \frac{0.619}{27.5} \text{ [watts/ cm'}$$
$$\lambda = 0.0225 \text{ [watts/ cm}^2\text{]}$$

Step No. 38 Calculate the temperature rise in degrees C.

$$T_r = 450(\lambda)^{(0.826)} \text{ [degrees C]}$$
$$T_r = 450(0.0225)^{(0.826)} \text{ [degrees C]}$$
$$T_r = 19.6 \text{ [degrees C]}$$

Design Summary

Core Part Number	MP-55059	
Magnetic Material	MPP powder core	
Frequency	100kHz	
Flux Density	0.228 T	
Core Loss	0.079 w	
Permeability	60	
Millihenrys per 1K Turns	43	
Window Utilization Ku	0.384	
Winding Number	1	2
AWG	20	24
Strands	1	1
Total Turns	63	107
Resistance Ω	0.0638	0.274
Copper Loss	0.225 w	0.315 w

Engineering Notes

Single Ended Short Circuit Mag-Amp Design using a Square Permalloy 80 Core

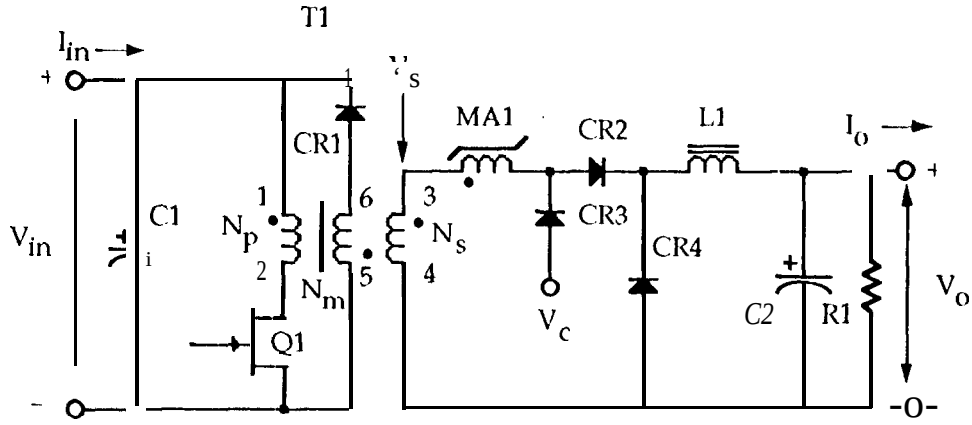

Figure 3.8 Single ended forward converter with mag-amp.

Single Ended Forward Converter
Mag-Amp Design Output Specification

1.	Secondary voltage rnax	's(max) = 18 volts
2.	output voltage	V_o = 5 volts
3.	Output current	I_o = 5 amps
4.	Overwind	O_W = 20 %
5.	Frequency	f = .50 kHz
6.	Maximum duty ratio	D_{max} = 0.45
7.	Operating flux density	B_m = 0.4 tesla
8.	Window utilization	K_u = 0.2
9.	Current density	J = 300 amps/cm2
10.	Control	Short circuit
11.	Magnetic material	Permalloy 80
12.	[illegible] voltage	[illegible] .0

Step No. 1 Calculate the total period, T.

$$T = \frac{1}{f} \text{ [seconds]}$$

$$T = \frac{1}{50000} \text{ [seconds]}$$

$$T = 20 \text{ [}\mu\text{sec]}$$

Step No. 2 Calculate the maximum transistor on time, ton.

$$t_{on} = TD_{max} \text{ [}\mu\text{sec.]}$$

$$t_{on} = (20x10\text{-}G\ )(0.45) \text{ [}\mu\text{sec.]}$$

$$t_{on} = 9.0 \text{ [}\mu\text{sec.]}$$

Step No. 3 Calculate the required core volt-seconds, A.

$$A' = V_{s(max)} t_{on(max)} \text{ [V}\mu\text{sec]}$$

$$A' = (18)(9) \text{ [V}\mu\text{sec]}$$

$$A' = 162 \text{ [V}\mu\text{sec]}$$

Step No. 4 Calculate the mag-amp control and clamp voltage, V_c.

$$V_c = \frac{A'}{t} \text{ [volts]}$$

$$V_c = \frac{180'}{9} \text{ [volts]}$$

$$V_c = 20 \text{ [volts]}$$

Step No. 5 Calculate the gate volt-second capability with overwind, $C)_w$.

$$A = A' O_w \text{ [V}\mu\text{sec]}$$

$$A = (162)(1.2) \text{ [V}\mu\text{sec]}$$

$$A = 192 \text{ [V}\mu\text{sec]}$$

Step No. 6 Calculate the rms gate current, I_{grms}. This is assuming the ripple current AI is small.

$$I_{grms} = I_o\sqrt{D_{max}} \text{ [amps]}$$

$$I_{grms} = (5.0)\{0.45 \text{ [amps]}$$

$$I_{grms} = 3.35 \text{ [amps]}$$

See Engineering Design Note No. 16.

Step No. 7 Calculate gate wire area, $A_{W(B)}$.

$$A_{w(B)} = \frac{I_{grms}}{J} \quad [cm^2]$$

$$A_{w(B)} = \frac{3.35}{300} \quad [cm^2]$$

$$A_{w(B)} = 0.0112 \quad [cm^2]$$

Step No. 8 Calculate the required core area product, A_p.

$$A_p = \frac{AA_{w(B)} x 10^4}{2B_m K_u} \quad [cm^4]$$

$$A_p = \frac{(192x10^4)(0.0112)x104}{2(0.4)(0.2)} \quad [cm^4]$$

$$A_p = 0.134 \quad [cm^4]$$

Step No. 9 Select from Table 7.4 a mag-amp core comparable in area product A_p.

Core number	5OB1O-1D
Manufacturer	Magnetics Inc.
Magnetic material	Sq. Permalloy 80
Magnetic path length	MPL = 6.18 cm
Core weight	Wtfe = 3.57 grams
Copper weight	Wt_{cu} = 16.88 grams
Mean length turn	MLT = 2.78 cm
Iron area	$A_c = 0.0756\ cm^2$
Window Area	$Wa = 1.705\ cm^2$
Area Product	$A_p = 0.129\ cm^4$
Core geometry	$Kg = 0.00140\ cm^5$
Surface area	$A_t = 28.4\ cm^2$

Step No. 10 Calculate the number of gate turns, N_g.

$$N_g = \frac{A x 10^4}{2A_c B_m} \quad [turns]$$

$$N_g = \frac{(192x10^{-6})x10^4}{(2)(0.0756)(0.4)} \quad [turns]$$

$$N_g = 31.7 = 32 \quad [turns]$$

Step No. 11 Calculate the skin depth, γ. The skin depth will be the radius of the wire.

$$\gamma = \frac{6.62}{\sqrt{f}} \text{ [cm]}$$

$$\gamma = \frac{6.62}{\sqrt{50x10^3}} \text{ [cm]}$$

$$\gamma = 0.0296 \text{ [cm]}$$

See Engineering Design Note No. 1.

Step No. 12 Calculate the wire area.

$$wire_A = \pi(\gamma)^2 \text{ [cm}^2\text{]}$$

$$wire_A = (3.14)(0.0296)^2 \text{[cm}^2\text{]}$$

$$wire_A = 0.00275 \text{ [cm}^2\text{]}$$

Step No. 13 Select a wire size with the required area from the wire Table 9.1. If the area is not within 10% of the required area, then go to the next smallest size.

$$AWG = \#23$$

$$A_{w(B)} = 0.00259 \text{ [cm}^2\text{]}$$

$$\mu\Omega / cm = 666$$

$$A_{w(I)} = 0.00314 \text{ [cm}^2\text{] with insulation}$$

Step No. 14 Calculate the required number of gate strands, S_g, and the new $\mu\Omega$/cm.

$$S_g = \frac{A_{wg}}{wire_A}$$

$$S_g = \frac{(0.0112)}{(0.00259)}$$

$$S_g = 4.32 \text{ use } 4$$

$$(new)\mu\Omega / cm = \frac{\mu\Omega / cm}{S_g} = \frac{666}{4} = 167$$

Step No. 15 Calculate the gate winding resistance, Rg.

$$R_g = MLT(N_8)(\$)x10^{-} \text{ [d-u-m]}$$

$$R_g = (2.78)(32)(167)x10\text{-G} \text{ [ohms]}$$

$$R_g = 0.0149 \text{ [ohms]}$$

Step No. 16 Calculate the gate copper 10SS, Pg.

$$P_g = I_g^2 R_g \quad \text{[watts]}$$
$$P_g = (3{,}3.5)^2(.0149) \quad \text{[watts]}$$
$$P_g = 0.167 \quad \text{[watts]}$$

Step No. 17 Calculate the window utilization, Ku.

$$K_u = \frac{N_g A_{w(B)} S_g}{W_a}$$
$$K_u = \frac{(32)(0.00259)(4)}{(1.705)}$$
$$\text{KU} = 0.194$$

See Engineering Design Note No. J 5.

Step No.18 Calculate the watts per kilogram, WK.

$$WK = 774\text{x}10^{-7}(f)^{(1.5)}(B_m)^{(1.8)} \quad \text{[watts / kilogram]}$$
$$WK = (774\text{x}10^{-7})(50000)^{(1.5)}(0.4)^{(1.8)} \quad \text{[watts/ kilogram]}$$
$$WK = 166 \quad \text{[watts/ kilogram] or [milliwatts / gram]}$$

Step No. 19 Calculate the core loss, P_{fe}.

$$P_{fe} = \left(\frac{\text{milliwatts}}{\text{gram}}\right) W_{tfe}\text{x}10^{-3} \quad \text{[watts]}$$
$$P_{fe} = (166)(3.57)\text{x}10\text{-S} \quad \text{[watts]}$$
$$P_{fe} = 0.593 \quad \text{[watts]}$$

Step No. 20 Calculate the total loss, core P_{fe} and copper P_{cu}, in watts P_Σ.

$$P_\Sigma = P_{fe} + P_{cu} \quad \text{[watts]}$$
$$P_\Sigma = (0{,}593) + (0.167) \quad \text{[watts]}$$
$$P_\Sigma = 0.760 \quad \text{[watts]}$$

Step No. 21 Calculate the watt density, λ.

$$\lambda = \frac{P_{\Sigma}}{A_t} \text{ [watts/ cm}^2\text{]}$$

$$\lambda = \frac{0.760}{28.4} \text{ [watts/ cm}^2\text{]}$$

$$A = 0.0268 \text{ [watts/ cm}^2\text{]}$$

Step No. 22 Calculate the temperature rise in degrees C.

$$T_r = 450(\lambda)^{(0.826)} \text{ [degrees C]}$$

$$T_r = 450(0.0268)^{(0.826)} \text{ [degrees C]}$$

$$T_r = 22{,}6 \text{ [degrees C]}$$

Step No. 23 Calculate the magnetizing force in oersteds, H_c.

$$H_c = \frac{\left(\frac{WK}{2.2}\right)}{0.0166 B_m f} \text{ [oersteds]}$$

$$H_c = \frac{\left(\frac{166}{2.2}\right)}{0.0166(0.4)(50000)} \text{ [oersteds]}$$

$$H_c = 0.227 \text{ [oersteds]}$$

Step No. 24 Calculate the control or magnetizing current, I_c.

$$I_m = \frac{H_c MPL}{1.256 N_g} \text{ [amps]}$$

$$I_m = \frac{(0.227)(6.18)}{1.256(32)} \text{ [amps]}$$

$$I_m = 0.0349 \text{ [amps]}$$

Design Summary

Core Part Number	50B10-1D
Magnetic Material	Sq. Permalloy 80
Frequency	50kHz
Flux Density	0.4 T
Core Loss	0.593 w
Window Utilization Ku	0.194
Winding Number	1
AWG	23
Strands	4
Total Turns	32
Resistance Ω	0.0149
Copper Loss	0.167W

Engineering Notes

Single Ended Regulation only Mag-Amp Design using a Metglas Core

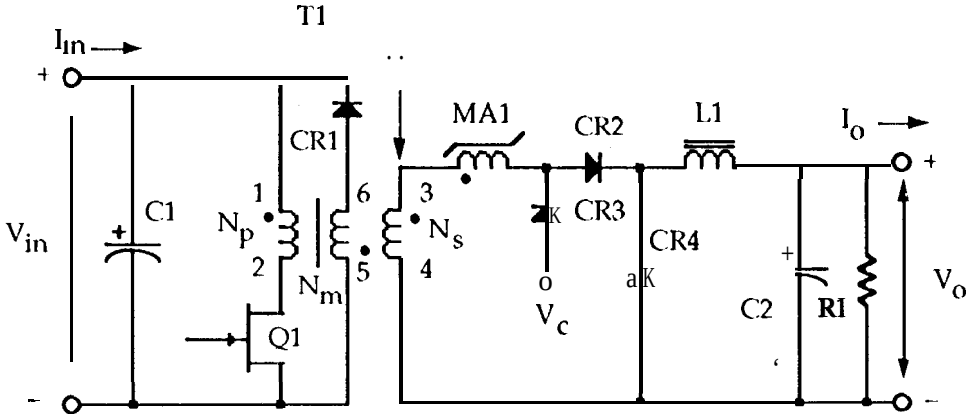

Figure 3.9 Single ended forward converter with mag-amp.

Single Ended Forward Converter
Mag-Amp Design Output Specification

1.	Secondary voltage max	$V_{s(max)}$ = 18 volts
2.	Output voltage	V_o = 5 volts
3.	Output current	I_o = 5 amps
4.	Overwind	O_w = 20 %
5.	Frequency	f = .50 kHz
6.	Maximum duty ratio	D_{max} = 0.45
7.	Operating flux density	B_m = 0.5 tesla
8.	Window utilization	Ku = 0.2
9.	Current density	J = 300 amps/cm^2
10.	Control	Regulation only
11.	Magnetic material	Metglas 2714A
12.	Diode voltage drop	V_d = 1.0 volt

Step No. 1 Calculate the total period, T.

$$T = \frac{1}{f} \quad \text{[seconds]}$$

$$T = \frac{1}{50000} \quad \text{[seconds]}$$

$$T = 20 \ [\mu\text{sec}]$$

Step No. 2 Calculate the maximum transistor on time, t_{on}.

$$t_{on} = TD_{max} \ [\mu\text{sec.}]$$

$$t_{on} = (20\text{x}10^{-6})(0.45) \quad [\mu\text{sec.}]$$

$$t_{on} = 9.0 \ [\mu\text{sec.}]$$

Step No. 3 Calculate the required pulse width, t_{pw}.

$$t_{pw} = (V_o + V_d)\frac{T}{V_{max}} \quad [\mu\text{sec.}]$$

$$t_{pw} = (5 + 1)\frac{20}{18} \quad [/\text{f Sec.}]$$

$$t_{pw} = 6.66 \ [//\text{sec.}]$$

Step No. 4 Calculate the required core volt-seconds, A.

$$A' = V_{s(max)}(t_{on} - t_{pw}) \ [\text{V}\mu\text{sec}]$$

$$A' = 18(9 - 6.66) \ [\text{V}\mu\text{sec}]$$

$$A' = 42.1 \ [\text{V}\mu\text{sec}]$$

Step No. 5 Calculate the mag-amp control and clamp voltage, V_c.

$$t = \frac{T}{2} = \frac{20}{2} = 10 \ [\mu\text{sec}]$$

$$V_c = \frac{A'}{t} \quad \text{[volts]}$$

$$V_c = \frac{42.1'}{10} \quad \text{[volts]}$$

$$V_c = 4.21 \ \text{[volts]}$$

Step No. 6 Calculate the volt-second with an overwind, O_w.

$$A = \Lambda' O_w \text{ [V}\mu\text{sec]}$$
$$A = (42.1)(1.2) \text{ [V}\mu\text{sec]}$$
$$A = 50.5 \text{ [V}\mu\text{sec]}$$

Step No. 7 Calculate the rms gate current, I_{grms}.

$$I_{grms} = I_o \sqrt{D_{max}} \text{ [amps]}$$
$$I_{grms} = (5.0)\sqrt{0.45} \text{ [amps]}$$
$$I_{grms} = 3,35 \text{ [amps]}$$

See Engineering Design Note No. 16.

Step No. 8 Calculate the gate wire area, $A_{W(B)}$.

$$A_{U!(R)} = \frac{I_{grms}}{J} \text{ [cm']}$$
$$A_{W(R)} = \frac{3.35}{300} \text{ [cm']}$$
$$A_{w(B)} = 0.0112 \text{ [cm']}$$

Step No. 9 Calculate the required core area product, A_p.

$$A_p = \frac{AA_{w(B)} x10^4}{2B_m K_u} \text{ [cm']}$$
$$A_{lJ} = \frac{(50.5 \text{ x}10^{-})(0.0112)\text{x}10^4}{2(0.5)(0,2)} \text{ [cm']}$$
$$A_p = 0.0283 \text{ [cm']}$$

Step No.10 Select from Table 7.4a mag-amp core comparable in area product A_p.

Core number	50B11-1E
Manufacturer	Magnetics Inc.
Magnetic material	Metglas
Magnetic path length	MPL = 4.49 cm
Core weight	Wtf_e = 0.86 grams
Copper weight	Wtc_u = 7.41 grams
Mean length turn	MLT = 2.23 cm
Iron area	A_c = 0.0252 cm^2
Window Area	Wa = 0.937 cm^2
Area Product	A_p = 0.0354 cm^4
Core geometry	Kg= 0.000241 cm^5
Surface area	At= 16.0 cm^2

Step No. 11 Calculate the number of gate turns, N_g.

$$N_g = \frac{A \times 10^4}{2A_c B_m} \text{ [turns]}$$

$$N_g = \frac{(50.5 \times 10^{-3}) \times 10^4}{(2)(0.0252)(0.5)} \text{ [turns]}$$

$$N_g = 20.0 \text{ [turns]}$$

Step No. 12 Calculate the skin depth, y, The skin depth will be the radius of the wire.

$$y = \frac{6.62}{\sqrt{f}} \text{ [cm]}$$

$$\gamma = \frac{6.62}{\sqrt{50 \times 10^3}} \text{ [cm]}$$

$$y = 0.0296 \text{ [cm]}$$

See Engineering Design Note No. 1,

Step No. 13 Calculate the wire area.

$$wire_A = \pi(\gamma)^2 \text{ [cm}^2\text{]}$$

$$wire_A = (3.14)(0.0296)^2 \text{ [cm}^2\text{]}$$

$$wire_A = 0.00275 \text{ [cm}^2\text{]}$$

Step No. 14 Select a wire size with the required area from the wire Table 9.1. If the area is not within 10% of the required area, then go to the next smallest size.

$$AWG = \#23$$

$$A_{w(B)} = 0.00259 \text{ [cm}^2\text{]}$$

$$\mu\Omega / cm = 666$$

$$A_{w(I)} = 0.00314 \text{ [cm}^2\text{] with insulation}$$

Step No.15 Calculate the required number of gate strands, S_g, and the new $\mu\Omega$/cm.

$$S_g = \frac{A_{wg}}{wire_A}$$

$$S_g = \frac{(0.0112)}{(0.00259)} = 4.32 \text{ use } 4$$

$$(new)\mu\Omega / cm = \frac{\mu\Omega / cm}{S_g} = \frac{666}{4} = 167$$

Step No. 16 Calculate the gate winding resistance, R_g.

$$R_g = MLT(N_g)\left(\frac{\mu\Omega}{cm}\right)x10^{-6} \text{ [ohms]}$$

$$R_g = (2{,}23\ )(20)(167)x10\text{-}' \text{ [ohms]}$$

$$R_g = 0.\ 00745 \text{ [ohms]}$$

Step No. 17 Calculate the gate copper loss, T'_g.

$$P_g = I_g^2 R_g \text{ [watts]}$$

$$P_g = (3.35)^2(.00745) \text{ [watts]}$$

$$P_g = 0.0836 \text{ [watts]}$$

Step No. 18 Calculate the window utilization, Ku.

$$K_u = \frac{N_g A_{w(B)} S_{sg}}{W_a}$$

$$K_u = \frac{(20)(0.\ 00259)(4)}{(0.937)}$$

$$K_u = 0.221$$

See Engineering Design Note No. 15.

Step No. 19 Calculate the watts per kilogram, WK.

$$WK = 10lxl\ 0^{-7}(f)^{(1.55)}(B_m)^{(1,,67)} \text{ [watts / kilogram]}$$

$$WK = (101x10^{-7})(50000)^{(1.55)}(0.5)^{(1.67)} \text{ [watts/ kilogram]}$$

$$WK = 61 \text{ [watts/ kilogram] or [milliwatts/ gram]}$$

Step No. 20 Calculate the core loss. P_{fe}.

$$P_{fe} = \left(\frac{\text{milliwatts}}{\text{gram}}\right)W_{tfe}x10^{-3} \text{ [watts]}$$

$$P_{fe} = (61)(\ 0.86)x10\text{-}3 \text{ [watts]}$$

$$P_{fe} = 0.0525 \text{ [watts]}$$

Step No, 21 Calculate the total loss, core P_{fe} and copper P_{cu}, in watts P_{Σ}.

$$P_{\Sigma} = P_{fe} + P_{cu} \text{ [watts]}$$
$$P_{\Sigma} = (0.0525)+(0.0836) \text{ [watts]}$$
$$P_{\Sigma} = 0{,}136 \text{ [watts]}$$

Step No. 22 Calculate the watt density, λ.

$$\lambda = \frac{P_{\Sigma}}{A_i} \text{ [watts/ cm}^2\text{]}$$
$$\lambda = \frac{0.136}{17} \text{ [watts/ cm}^2\text{]}$$
$$\lambda = 0.008 \text{ [watts/ cm}^2\text{]}$$

Step No. 23 Calculate the temperature rise in degrees C.

$$T_r = 450(2\ )^{(0,,82,)} \text{[degrees C]}$$
$$T_r = 450(0.008\ )^{(0,,82,)} \text{[degrees C]}$$
$$T_r = 8.34 \text{ [degrees C]}$$

Step No. 24 Calculate the magnetizing force in oersteds, H_c.

$$H_c = \frac{\left(\frac{WK}{2.2}\right)}{0.0191 B_m f} \text{ [oersteds]}$$
$$H_c = \frac{\left(\frac{61}{2.2}\right)}{0.0191(0.5)(50000)} \text{ [oersteds]}$$
$$H_c = 0.0581 \text{ [oersteds]}$$

Step No. 25 Calculate the control or magnetizing current, I_c.

$$I_m = \frac{H_c MPL}{1.256 N_g} \text{ [amps]}$$
$$I_m = \frac{(0.0581)(4.49)}{1.256(20)} \text{ [amps]}$$
$$I_m = 0.0104 \text{ [amps]}$$

Design Summary

Core Part Number	50B11-1E
Magnetic Material	Metglas
Frequency	50kHz
Flux Density	0.5 T
Core Loss	0.0525 W
Window Utilization Ku	0.221
Winding Number	1
AWG	23
Strands	4
Total Turns	16
Resistance Ω	0.00745
Copper Loss	0.0836W

Engineering Notes

310
Push Pull Converter Mag-Amp Regulation only Design using a **Metglas Alloy 2714A Core**

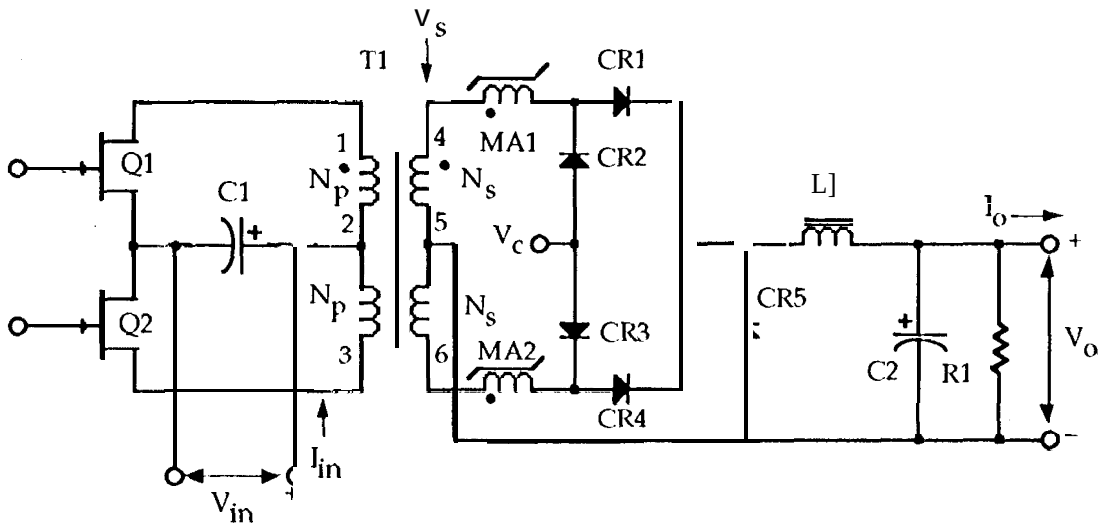

Figure 3.10 Push-pull converter with mag-amp.

Push Pull Converter
Mag-Amp Output Design Specification

1. Secondary voltage max ..... $V_{s(max)}$ = 14 volts
2. Output voltage ..... V_o = 5 volts
3. Output current ..... I_o = 2 amps
4. Overwind ..... O_w = 20%
5. Frequency ..... f=50kHz
6. Maximum duty ratio ..... D_{max} = 0.45
7. Operating flux density ..... B_m = 0.5 tesla
8. Window utilization ..... KU =0.2
9. Current density ..... J = 300 amps/cm^2
10. Control ..... Regulation only
11. Magnetic material ..... Metglas 2714A
12. Diode voltage drop ..... V_d = ~~1~~ volt
    1.0

Step No. 1 Calculate the total period, T and T/2.

$$T = \frac{1}{f} \quad \text{[seconds]}$$

$$T = \frac{1}{50000} = 20 \quad [\mu\text{sec}]$$

$$f = \frac{T}{2} = 10 \quad [\mu\text{sec}]$$

Step No. 2 Calculate the maximum transistor on time, ton.

$$t_{on} = TD_{max} \; [\mu\text{sec.}]$$

$$t_{on} = (20\text{x}10^{-C})(0.45) \; [\mu\text{sec.}]$$

$$t_{on} = 9.0 \; [\mu\text{sec.}]$$

Step No. 3 Calculate the required pulse width, tpw.

$$t_{pw} = (V_o + V_d)\frac{t}{V_{max}} \quad [\mu\text{sec.}]$$

$$t_{pw} = (5 + 1)\frac{10}{14} \; [\mu\text{sec.}]$$

$$t_{pw} = 4.28 \quad @cc.]$$

Step No. 4 Calculate the required core volt-seconds, Λ.

$$A' = V_{max}(t_{on} - t_{pw}) \; [V\mu\text{sec}]$$

$$\Lambda' = 14(9 - 4.28) \; [V\mu\text{sec}]$$

$$A' = 60 \; [V\mu\text{sec}]$$

Step No. 5 Calculate the mag-amp control and clamp voltage, V_c.

$$V_c = \frac{\Lambda'}{t} \quad \text{[volts]}$$

$$V_c = :- \; [\text{volts}]$$

$$V_c = 6 \; [\text{volts}]$$

Step No. 6 Calculate the volt-second with an overwind, $C)_w$.

$$A = A' \; O_w \; [V\mu\text{sec}]$$

$$A = (60)(1.2) \; [V\mu\text{sec}]$$

$$A = 72 \; [V\mu\text{sec}]$$

Step No. 7 Calculate the rms gate current, I_{grms}.

$$I_{grms} = I_o\sqrt{D_{max}} \text{ [amps]}$$

$$I_{grms} = (2.0)\{0.45 \text{ [amps]}$$

$$I_{grms} = 1.34 \text{ [amps]}$$

See Engineering Design Note No. 16.

Step No. 8 Calculate the gate wire area, $A_{W(B)}$.

$$A_{w(B)} = \frac{I_{grms}}{J} \text{ [cm']}$$

$$A_{W(R)} = \frac{1.34}{300} \text{ [cm']}$$

$$A_{w(B)} = 0.00447 \text{ [cm']}$$

Step No. 9 Calculate the required core area product, A_p.

$$A_p = \frac{\Delta A_{w(B)} x 10^4}{2B_m K_u} \text{ [cm}^4\text{]}$$

$$A_p = \frac{(72x10^{-6})(0.00447)x10^4}{2(0,5)(0,2)} \text{ [cm']}$$

$$A_p = 0.0161 \text{ [cm}^4\text{]}$$

Step No. 10 Select from Table 7.4 a mag-amp core comparable in area product A_p.

Core number	50B11-1E
Manufacturer	Magnetics Inc.
Magnetic material	Metglas Alloy 2714A
Magnetic path length	MPL = 3.49 cm
Core weight	Wtfe = 1.01 grams
Copper weight	Wt_{cu} = 3.33 grams
Mean length turn	MLT = 1.92 cm
Iron area	A_c = 0.0378 cm^2
Window Area	Wa = 0.471 cm^2
Area Product	A_p = 0.0178 cm^4
Core geometry	Kg= 0.000137 cm5
Surface area	At= 10.4 crn^2

Step No. 11 Calculate the number of gate turns, N_g.

$$N_g = \frac{A \times 10^4}{2A_c B_m} \quad [\text{turns}]$$

$$N_g = \frac{(72x10^{-G})x10^4}{(2)(0.0378)(0.5)} \quad [\text{turns}]$$

$$N_g = 19 \quad [\text{turns}]$$

Step No. 12 Calculate the skin depth, γ. The skin depth will be the radius of the wire.

$$\gamma = \frac{6.62}{\sqrt{f}} \quad [\text{cm}]$$

$$y \cdot \frac{6.62}{\sqrt{50x10^3}} \quad [\text{cm}]$$

$$y = 0.0296 \quad [\text{cm}]$$

See Engineering Design Note No. 1.

Step No. 13 Calculate the wire area.

$$wire_A = \pi(\gamma)^2 \quad [\text{cm}^2]$$

$$wire_A = (3.14)(0,0296)' \quad [\text{cm}']$$

$$wire_A = 0.00275 \quad [\text{cm}^2]$$

Step No. 14 Select a wire size with the required area from the wire Table 6.1. If the area is not within 10% of the required area, then go to the next smallest size.

$$AWG = \#23$$

$$A_{w(B)} = 0.00259 \quad [\text{cm}^2]$$

$$\mu\Omega / cm = 666$$

$$A_{w(I)} = 0.00314 \quad [\text{cm}^2] \text{ with insulation}$$

Step No. 15 Calculate the required number of gate strands, S_g, and the new $\mu\Omega$/cm.

$$S_g = \frac{A_{wg}}{wire_A}$$

$$S_g = \frac{(0.00447)}{(0.00259)} = 1.73 \text{ use } 2$$

$$(new)\mu\Omega / cm = \frac{\mu\Omega / cm}{S_g} = \frac{666}{2} = 333$$

Step No. 16 Calculate the gate winding resistance, R_g.

$$R_g = MLT(N_g)\left(\frac{\mu\Omega}{cm}\right)x10^{-6} \text{ [ohms]}$$

$$R_g = (1,92)(19)(333)x1\ 0^{-6} \text{ [ohms]}$$

$$R_g = 0,0121 \text{ [ohms]}$$

Step No. 17 Calculate the gate copper loss, Pg.

$$P_g = I_g^2 R_g \text{ [watts]}$$

$$P_g = (1.34)^2(,0121) \text{ [watts]}$$

$$P_g = 0.0217 \text{ [watts]}$$

Step No. 18 Calculate the window utilization, K_u.

$$Ku = \frac{N_g A_{w(B)} S_{sg}}{W_a}$$

$$K_u = \frac{(1\ 9)\ (0000259)\ (2)}{(0.471)}$$

$$K_u = 0.209$$

See Engineering Design Note No. 15.

Step No. 19 Calculate the watts per kilogram, WK.

$$WK = 10lxl\ 0^{-7}(f)^{(1.55)}(B_m)^{(1.67)} \text{ [watts / kilogram]}$$

$$WK = (101x10^{-7})(50000\ )^{(1.55)}(0.5)^{(1.67)} \text{ [watts / kilogram]}$$

$$WK = 61 \text{ [watts/ kilogram]}$$

Step No. 20 Calculate the core loss, P_{fe}.

$$P_{fe} = \left(\frac{\text{milliwatts}}{\text{gram}}\right)W_{tfe}x10^{-3} \text{ [watts]}$$

$$P_{fe} = (61)(1,\ 01)x1\ 0^{-3} \text{ [watts]}$$

$$P_{fe} = 0.0616 \text{ [watts]}$$

Step No. 21 Calculate the total loss, core P_{fe} and copper P_{cu}, in watts P_{Σ}.

$$P_{\Sigma} = P_{fe} + P_{cu} \text{ [watts]}$$
$$P_{\Sigma} = (0{,}0616) + (0{,}0217) \text{ [watts]}$$
$$P_{\Sigma} = 0.0833 \text{ [watts]}$$

Step No. 22 Calculate the watt density, λ.

$$\lambda = \frac{P_{\Sigma}}{A_t} \text{ [watts /cm']}$$
$$\lambda = \frac{0.0833}{10.4} \text{ [watts / cm']}$$
$$\lambda = 0.00801 \text{ [watts/ cm']}$$

Step No. 23 Calculate the temperature rise in degrees C.

$$T_r = 450(\lambda)^{(0.826)} \text{ [degrees C]}$$
$$T_r = 450(0.00801)^{(0.826)} \text{ [degrees C]}$$
$$T_r = 8.35 \text{ [degrees C]}$$

Step No. 25 Calculate the magnetizing force in oersteds, H_c.

$$H_c = \frac{\left(\frac{WK}{2.2}\right)}{0.0191 B_m f} \text{ [oersteds]}$$
$$H_c = \frac{\left(\frac{61}{2.2}\right)}{0.0191(0.5)(50000)} \text{ [oersteds]}$$
$$H_c = 0.0581 \text{ [oersteds]}$$

Step No. 26 Calculate the control or magnetizing current, I_c.

$$I_m = \frac{H_c MPL}{1.256 N_g} \text{ [amps]}$$
$$I_m = \frac{(0.0581)(3.49)}{1.256(19)} \text{ [amps]}$$
$$I_m = 0.0085 \text{ [amps]}$$

See Engineering Design Note No. 19.

Design Summary

Core Part Number	50B11-1E
Magnetic Material	Metglas 2714A
Frequency	50kHz
Flux Density	0.51'
Core Loss	0.0616 w
Window Utilization Ku	0.209
Winding Number	1
AWC;	23
Strands	2
Total Turns	19
Resistance Ω	0.0121
Copper Loss	0.0217 w

Engineering Notes

311
Input Inductor Design using an Iron Powder Core

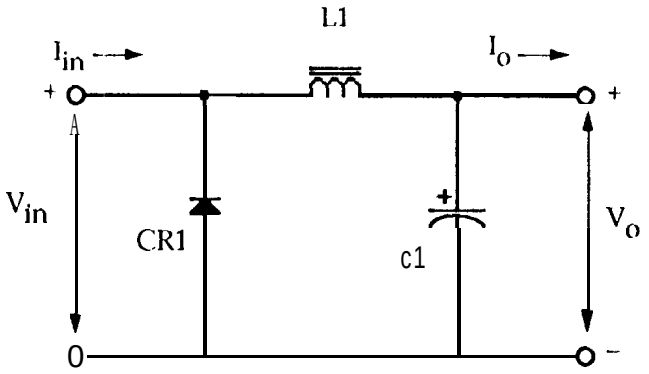

Figure 3.11 Typical input filter inductor circuit

Input Inductor Design Specification

1. Input voltage minimum... ..... V_{min} = 20 volts
2. Input voltage maximum ..... V_{max} = 40 volts
3. Frequency ..... f = 100 kHz
4. Capacitor ripple voltage pk-pk ..... ΔV_c = 1 volt
5. Inductor ripple current pk-pk ..... ΔI_L = 10 ma
6. Regulation ..... α = 0.5 %
7. Output power ..... P_o = 60 watts
8. Input current at low line ..... I_{in} = 3.0 amps
9. Operating flux density ..... B_m = 0.75 tesla
10. Window utilization ..... Ku= 0.4

See Engineering Design Note No. 25.

This design procedure will work equally well with all of the various powder cores. Care must be taken regarding maximum flux density with different materials.

Step No. 1 Calculate the period, T.

$$T = \frac{1}{f} x10^{-6} [\mu\ sec.]$$

$$T = \frac{1}{100000} x10^{-6} [\mu\ sec.]$$

$$T=1O\ [\mu\ sec.\ ]$$

Step No. 2 Calculate the required input inductance, L.

$$L = \frac{\Delta V_c}{\Delta I_L}(DD'T)\ [\text{henry}]$$

$$L = \frac{1}{.01}(0.5)(0.5)\left(10 x10^{-6}\right)\ [\text{henry}]$$

$$L = 250\ [\mu h]$$

Step No. 3 Calculate the energy-handling capability in watt-seconds, w-s.

$$Energy = \frac{L(I_{in})^2}{2}\ [w\ -s]$$

$$Energy = \frac{(250x10^{-6})(3.0)^2}{2}\ [w\text{-}s]$$

$$Energy = .00113\ [w\ -s]$$

Step No. 4 Calculate the electrical conditions, K_e.

$$K_e = 0.145 P_o(B_m)^2 x10^{-4}$$

$$K_e = 0.145\ (60)(0.75)2X10\text{-}4$$

$$K_e = 4.89\ x10\text{-}4$$

Step No. 5 Calculate the core geometry, K_g.

$$K_g = \frac{(Energy)^2}{K_e \alpha}\ [cm^5]$$

$$K_g = \frac{(0.00113)^2}{(4.89X1O\text{-})(0.5)}\ [cm^5]$$

$$K_g = 0.00522\ \ ems]$$

Step No. 6 Select from Table 5.1 an iron powder core comparable in core geometry K_g.

Core number	T68-26A
Manufacturer	Micrometals
Magnetic path length	MPL = 4.23 cm
Core weight	Wtfe = 7,41 grams
Copper weight	Wt_{cu} = 5.96 grams
Mean length turn	MLT = 2.42 cm
Iron area	A_c = 0.250 cm^2
Window Area	W_a = 0.693 cm^2
Area Product	A_p = 0.174 cm^4
Core geometry	Kg= 0.00719 cm^5
Surface area	At= 15.46 cm^2
Core Permeability	mu= 75
Millihenrys per 1000 turns	mh = 58

Step No. 7 Calculate the number of turns, N.

$$N = 1000\sqrt{\frac{L_{(new)}}{L_{(1000)}}} \quad \text{[turns]}$$

$$N = 1000\sqrt{\frac{0.25}{58}} \quad \text{[turns]}$$

$$N = 65.6 \text{ use } 66 \quad \text{[turns]}$$

Step No. 8 Calculate the current density J using a window utilization K_u = 0.4,

$$J = \frac{NI_{in}}{W_a K_u} \quad \text{[amps / cm']}$$

$$J = \frac{(66)(3.0)}{(0.693)(0.4)} \quad \text{[amps/cm']}$$

$$J = 714 \quad \text{[amps/cm']}$$

Step No. 9 Calculate the required permeability, $\Delta\mu$.

$$\Delta\mu = \frac{(B_m)(MPL)\text{x}10^4}{(0.4\pi)(W_a)(J)(K_u)}$$

$$\Delta\mu = \frac{(0.75)(4.23)\text{x}104}{(1.256)(0,693)(714)(0.4)}$$

$$\Delta\mu = 128$$

The iron powder core T68-26A has a permeability of 75. From the above equation a core with a permeability of about 125 would more than likely work, Using a core with a lower perm results in more turns degrades the regulation but operates at a lower ac flux.

Step No. 10 Calculate the required bare wire area $A_{W(B)}$.

$$A_{w(B)} = \frac{I_{in}}{J} \text{ [cm']}$$

$$A_{w(B)} = \frac{3}{714} \text{ [cm']}$$

$$A_{w(B)} = 0.00420 \text{ [cm']}$$

Step No. 11 Select a wire size with the required area from the wire Table 9.1. If the wire area is not within 10% of the required area, then go to the next smallest size.

$$AWG = \#21$$

$$A_{w(B)} = 0.004116 \text{ [cm']}$$

$$\mu\Omega / \text{cm} = 419$$

Step No. 12 Calculate the winding resistance, R.

$$R = (MLT)(N)\left(\frac{\mu\Omega}{cm}\right) x10^{-6} \text{ [ohm]}$$

$$R = (2.42)(66)(419)x10\text{-}G \text{ [ohm]}$$

$$R = 0.0669 \text{ [ohm]}$$

Step No. 13 Calculate the copper loss, P_{cu}.

$$P_{cu} = I_{in}^2 R \text{ [watts]}$$

$$P_{cu} = (3.0)^2(0.0669) \text{ [watts]}$$

$$P_{cu} = 0.602 \text{ [watts]}$$

Step No. 14 Calculate the magnetizing force in oersteds, H.

$$H = \frac{(0.4\pi)NI_{in}}{MPL} \text{ [oersteds]}$$

$$H = \frac{(1.256)(66)(3)}{4.23} \text{ [oersteds]}$$

$$H = 58.8 \text{ [oersteds]}$$

Step No.15 Calculate the ac flux density in tesla, Bat.

$$B_{ac} = \frac{(0.4Z)(N)(\$)(P)X1\ \ O\text{-}4}{MPL} \quad [\text{tesla}]$$

$$B_{ac} = \frac{(1.256)(\ \ 66)(0.005)(75)x10\text{-}4}{4.23} \quad [\text{tesla}]$$

$$B_{ac} = 0.000735 \ [\text{tesla}]$$

See Engineering design Note No. 6.

Step No. 16 Calculate the regulation, α, for this design.

$$\alpha = \frac{P_{cu}}{P_o} x100 \quad [\%]$$

$$\alpha = \frac{0.602}{60} X100 \quad [\%]$$

$$\alpha = 1.00 \ [\%]$$

See Engineering design Note No. 28.

Step No, 17 Calculate the watts per kilogram, WK.

$$WK = 0.0131(f)^{(1.36)}(B_{ac})^{(2\ 03)} \ [\text{watts/ kilogram}]$$

$$WK = 0.0131\ (50000)^{(1\text{,,}\%)}(0.000735)(2\ 03) \ [\text{watts/kilogram}]$$

$$WK = 0.0139 \ [\text{watts/ kilogram}] \ \text{or} \ [\text{milliwatts/ gram}]$$

Step No, 18 Calculate the core loss, P_{fe}.

$$P_{fe} = \left(\frac{\text{milliwatts}}{\text{gram}}\right) W_{tfe} x10^{-3} \quad [\text{watts}]$$

$$P_{fe} = (0.0139\ \ )(7.41)x10\text{-}S \ [\text{watts}]$$

$$P_{fe} = 0.0001 \ [\text{watts}]$$

Step No. 19 Calculate the total loss, core P_{fe} and copper P_{cu}, in watts P_{Σ}.

$$P_{\Sigma} = P_{fe} + P_{cu} \ [\text{watts}]$$

$$P_{\Sigma} = (0.0001) + (O.\ 419) \ [\text{watts}]$$

$$P_{\Sigma} = 0.419 \ [\text{watts}]$$

Step No. 20 Calculate the watt density, λ.

$$\lambda = \frac{P_{\Sigma}}{A} \text{ [watts/ cm}^2\text{]}$$

$$\lambda = \frac{0.419}{14.4} \text{ [watts/ cm}^2\text{]}$$

$$A = 0.0291 \text{ [watts/ cm}^2\text{]}$$

Step No. 21 Calculate the temperature rise in degrees C.

$$T_r = 450(\lambda)^{(0.826)} \text{ [degrees C]}$$

$$T_r = 450(0.0291)^{(0.826)} \text{ [degrees C]}$$

$$T_r = 24.2 \text{ [degrees C]}$$

Step No. 22 Calculate the window utilization, K_u.

$$K_u = \frac{NA_{w(B)}}{W_a}$$

$$K_u = \frac{(66)(0.004116)}{(0.693)}$$

$$K_u = 0.392$$

Design Summary

Core Part Number	T68-26A
Magnetic Material	Iron Powder
Frequency	100kHz
Flux Density	0.75 T
Core Loss	0.1 mW
Permeability	75
Millihenrys per 1K Turns	58
Window Utilization Ku	0.392
Winding Number	1
AWG	21
Strands	1
Total Turns	66
Resistance Ω	0.067
Copper Loss	0.602

Buck Inductor Design using a Cut Metglas Material Type 2605TCA Toroid Core

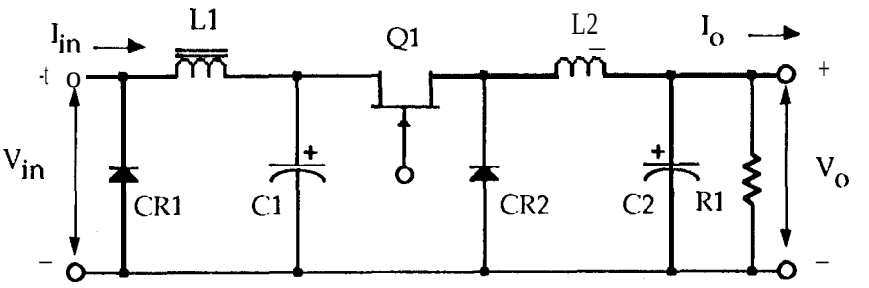

Figure 3.12 Buck regulator converter.

Buck Regulator Output Inductor Design specification

Metglas Material Type 2605TCA

1. Frequency ..... $f = 50$ kHz
2. Output voltage ..... $V_o = 10$ volts
3. Output current ..... $I_{o(max)} = 4$ amps
4. Output current ..... $I_{o(min)} = 0.5$ amps
5. Input voltage max. ..... $V_{max} = 36$ volts
6. Input voltage min. ..... $V_{min} = 24$ volts
7. Duty ratio ..... $D_{max} = 0.45$
8. Regulation ..... $\alpha = 1.0\%$
9. Output power ..... $P_o = 40$ watts
10. Operating flux density ..... $B_m = 1.0$ tesla
11. Window utilization ..... $K_u = 0.4$

Step No. 1 Calculate the total period, T.

$$7 = \frac{1}{f} \text{ [seconds]}$$

$$T = \frac{1}{50000} \text{ [seconds]}$$

$$T = 20 \text{ [}\mu\text{sec]}$$

Step No. 2 Calculate the minimum duty ratio, D_{min}.

$$D_{min} = \frac{V_o}{V_{max}}$$

$$D_{min} = \frac{10}{36}$$

$$D_{min} = 0.277$$

Step No. 3 Calculate the required inductance, L.

$$L = \frac{(V_o + V_d)(1 - D_{min})T}{2I_{o(min)}} \text{ [henry]}$$

$$L = \frac{(10 + 1)(1 - 0.277)(20\text{x}10^{-6})}{2(0.5)} \text{ [henry]}$$

$$L = 159 \text{ [}\mu\text{h]}$$

Step No. 4 Calculate the delta current, Al.

$$\Delta I = \frac{TV_{max}D_{min}(1 - D_{min})}{L} \text{ [amps]}$$

$$\Delta I = \frac{(20\text{x}10^{-6})(36)(0.277)(1 - 0.277)}{(159\text{X}104)} \text{ [amp]}$$

Al= 0.907 [amps]

Step No. 5 Calculate the peak current, I_{pk}.

$$I_{pk} = I_{o(max)} + \left(\frac{\Delta I}{2}\right) \text{[amps]}$$

$$I_{pk} = (4) + \left(\frac{0.907}{2}\right) \text{ [amps]}$$

$$I_{pk} = 4.453 \text{ [amps]}$$

Step No. 6 Calculate the energy-handling capability in Watt-seconds, w-s.

$$ENG = \frac{LI_{pk}^2}{2} \quad [W-S]$$

$$ENG = \frac{(159X104)(4.453)^2}{2} \quad [w\ -s]$$

$$ENG = 0.00158 \ [w\ -s]$$

Step No. 7 Calculate the electrical conditions, K_e.

$$K_e = O.145 P_o B_m^2 x10^{-4}$$

$$K_e = (0.145)(\ 40)(1\ .0)^2 x10^{A}$$

$$K_e = 0.00058$$

Step No. 8 Calculate the core geometry, Kg.

$$Kg = \frac{(ENERGY)'}{K_e \alpha} \quad [cm^5]$$

$$'g = \frac{(0.00158)^2}{(0.00058)(1.0)} \quad ^{(cm,]}$$

$$K_g = 0.00430 \ [cm^s]$$

Step No. 9 Select from Table 8.2a Metglas tape core comparable in core geometry Kg.

Core number	AMP181OGTC
Manufacturer	Allied Signal
Magnetic path length	MPL = 4.71 cm
Core weight	Wtf_e = 8.00 grams
Copper weight	W_{tcu} = 9.45 grams
Mean length turn	MLT = 359 cm
Iron area	A_c = 0.236 cm^2
Window Area	Wa = 0.741 cm^2
Area Product	A_p = 0.175 cm^4
Core geometry	Kg= 0,00460 cm^5
Surface area	At= 23.6 cm^2
Millihenrys per 1000 turns	mh = 111

Step No. 10 Calculate the number of turns, N.

$$N = 1000\sqrt{\frac{L_{(new)}}{L_{(1000)}}} \quad \text{[turns]}$$

$$N = 1000\sqrt{\frac{.159}{111}} \quad \text{[turns]}$$

$$N = 37.8 \text{ use } 38 \quad \text{[turns]}$$

Step No. 11 Calculate the rms Current, I_{rms}.

$$I_{rms} = \sqrt{I^2_{o(max)} + \Delta I^2} \text{ [amps]}$$

$$I_{rms} = \sqrt{(4.0)^2 + (0.907)^2} \quad \text{[amps]}$$

$$I_{rms} = 4.10 \quad \text{[amps]}$$

Step No. 12 Calculate the current density J using a window utilization Ku = 0.4.

$$J = \frac{NI}{W_a K_u} \quad \text{[amps/ cm}^2\text{]}$$

$$J = \frac{(38)(4.10)}{(0.741)(0.4)} \quad \text{[amps / cm}^2\text{]}$$

$$J = 526 \quad \text{[amps/ cm}^2\text{]}$$

Step No. 13 Calculate the required permeability, $\Delta\mu$.

$$\Delta\mu = \frac{(B.)(MPL)x10^4}{0.4\pi(W_a)(J)(K_u)}$$

$$\Delta\mu = \frac{(1.0)(4.71)x10^4}{(1.256)(0.741)(526)(0.4)}$$

$$\Delta\mu = 241$$

Step No. 14 Calculate the peak flux density, B_m.

$$B_m = \frac{(0.4\pi)(N)(I_{pk})(\Delta\mu)x10^{-4}}{MPL} \quad \text{[tesla]}$$

$$B_m = \frac{(1.256)(38)(4.453)(241)x10^{-4}}{4,71} \quad \text{[tesla]}$$

$$B_m = 1.09 \quad \text{[tesla]}$$

Step No. 15 Calculate the required bare wire area, $A_{w(B)}$.

$$A_{w(B)} = \frac{I_{rms}}{J} \quad [\text{cm}']$$

$$A_{II,B)} = \& \quad [\text{cm}']$$

$$A_{w(B)} = 0.00780 \quad [\text{cm}^2]$$

Step No. 16 Select a wire size with the required area from the wire Table 9.1. If the area is not within 10% of the required area, then go to the next' smallest size.

$$AWG = \#18$$

$$A_{w(B)} = 0.00823 \quad [\text{cm}^2]$$

$$\mu\Omega / cm = 209$$

See Engineering design Note No. 11.

Step No. 17 Select a equivalent wire size with the required area from the wire Table 9.1.

$$AWG = \#21$$

$$A_{w(B)} = (2)(0.00412) \quad [\text{cm}']$$

$$A_{w(B)} = 0.00824 \quad [\text{cm}']$$

$$\mu\Omega / cm = \left(\frac{419}{2}\right)$$

$$\mu\Omega / cm = 209$$

Step No. 18 Calculate the winding resistance, R.

$$R = \left(MLT(N) \frac{\mu\Omega}{cm} \right) x10^{-6} [\text{ohms}]$$

$$R = 3.59(38)(209)x10^{<} \quad [\text{ohms}]$$

$$R = 0.0285 \quad [\text{ohms}]$$

Step No. 19 Calculate the copper loss, P_{cu}.

$$P_{cu} = I_{rms}^2 R \quad [\text{watts}]$$

$$P_{cu} = (4.10)^2(.0285) \quad [\text{watts}]$$

$$P_{cu} = 0.479 \quad [\text{watts}]$$

Step No. 20 Calculate the magnetizing force in oersteds, H.

$$H = \frac{(0.4\ \pi)NI_{pk}}{MPL} \text{ [oersteds]}$$

$$H = \frac{(1.256)(38)(4.453)}{4.71} \text{ [oersteds]}$$

$$H = 45.1 \text{ [oersteds]}$$

Step No. 21 Calculate the ac flux density in tesla, Bat.

$$B_{ac} = \frac{(0.4\pi)(N)\left(\frac{\Delta l}{2}\right)(\Delta\mu)x10^{-4}}{MPL} \text{ [tesla]}$$

$$B_{ac} = \frac{(1.256)(38\ )(0.453)(241)x10\text{-}4}{4.71} \text{ [tesla]}$$

$$B_{ac} = 0{,}111 \text{ [tesla]}$$

Step No. 22 Calculate the regulation, a, for this design.

$$\alpha = \frac{P_{cu}}{P_o} \text{ Xloo [\%]}$$

$$\alpha = \frac{(0.479)}{(40)} \text{ x100 [\%]}$$

$$a = 1.2 \text{ [\%]}$$

Step No. 23 Calculate the watts per kilogram, WK, using Metglas 2605TCA Figure 8.3.

$$WK = 3.608x10^{-2}(f)^{(1.129)}(B_{ac})^{(2.01)} \text{ [watts/ kilogram]}$$

$$WK = 3.608x10^{-2}(50000)^{(1.129)}(0.\ 111)(2\text{"}01) \text{ [watts/ kilogram]}$$

$$WK = 87.8 \text{ [watts/ kilogram] or [milliwatts /gram]}$$

Step No. 24 Calculate the core loss, pf_e.

$$P_{fe} = \left(\frac{\text{milliwatts}}{\text{gram}}\right)W_{tfe}x10^{-3} \text{ [watts]}$$

$$P_{fe} = (87.8\ )(8{,}09)x10\text{-}3 \text{ [watts]}$$

$$P_{fe} = 0.710 \text{ [watts]}$$

Step No. 25 Calculate the total loss, core P_{fe} and copper P_{cu}, in watts P_{Σ}.

$$P_{\Sigma} = P_{fe} + P_{cu} \text{ [watts]}$$
$$P_{\Sigma} = (0.710) + (0.479) \text{ [watts]}$$
$$P_{\Sigma} = 1.189 \text{ [watts]}$$

Step No. 26 Calculate the watt density, λ.

$$\lambda = \frac{P_{\Sigma}}{A_t} \text{ [watts / cm']}$$
$$\lambda = \frac{1.189}{23.6} \text{ [watts/ cm}^2\text{]}$$
$$\lambda = 0.0504 \text{ [watts/ cm}^2\text{]}$$

Step No. 27 Calculate the temperature rise in degrees C.

$$7, = 450(\lambda)^{(0.826)} \text{ [degrees C]}$$
$$T_r = 450(0{,}0504)^{(0{,}82{,})} \text{[degrees C]}$$
$$7, = 38.1 \text{ [degrees C]}$$

Step No. 28 Calculate the window utilization, Ku,

$$Ku = \frac{NS_n A_{w(B)}}{w^*}$$
$$K_u = \frac{(38)(2)(0.00413)}{(0.741)}$$
$$K_u = 0.423$$

Design Summary

Core Part Number	AMP181OG
Magnetic Material	Metglas 2605TCA
Frequency	50kHz
Flux Density	1.09 T
Core Loss	0.71 w
Permeability	241
Millihenrys per 1K Turns	111
Window Utilization Ku	0.423
Winding Number	1
AWG	21
Strands	2
Total Turns	38
Resistance Ω	0.0285
Copper Loss	0.479 w

Engineering Notes

313
Boost Converter Discontinuous Current Design using an EPC Ferrite Core

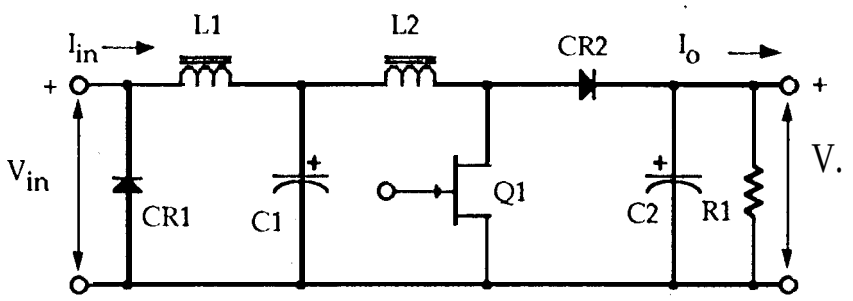

Figure 3,13 Discontinuous current boost converter.

Discontinuous Current Boost Converter
Inductor Design specification

1.	Input voltage	V_{nom} = 40 volts
2.	Input voltage	V_{min} = 30 volts
3.	Input voltage	V_{max} = 50 volts
4.	Output voltage	V.= 56 volts
5.	Output current	1_0= 1 amp
6.	Dwell time duty ratio	D_w = 0.1
7.	Frequency	f = 50 kHz
8.	Efficiency	η = 90%
9.	Regulation	α = 1 %
10.	Operating flux density	AB_m = 0.25 tesla
11.	Window utilization	K_u = 0.32
12.	Diode voltage drop	V_d = 1.0 volts
13.	Transistor on resistance	R_Q = 0.1 ohms

Step No. 6 Calculate the minimum load resistance, R_{min} (maximum load condition).

$$R_{min} = \frac{(V_{\cdot} + V_d)}{I_o} \text{ [ohms]}$$

$$R_{min} = \frac{57}{1} \text{ [ohms]}$$

$$R_{min} = 57 \text{ [ohms]}$$

Step No. 7 Calculate the maximum required inductance, L.

$$L < \frac{R_{min} T D_{max} (1 - D_{max} - D_w)^2}{2} \text{ [henrys]}$$

$$L \leq \frac{(57)(20\text{x}10^{A})(0.430)(0.470)2}{2} \text{ [henrys]}$$

$$L \leq 54. \text{ I use } 54 \text{ [}\mu\text{h]}$$

Step No. 8 Calculate the peak current, I_{pk}.

$$I_{pk} = \frac{2P_o}{(V_{\cdot} + V_d)(1 - D_{max} - D_w)} \text{ [amps]}$$

$$I_{pk} = \frac{114}{(56 + 1.0)(0.470)} \text{ [amps]}$$

$$I_{pk} = 4.25 \text{ [amps]}$$

Step No, 9 Calculate the rms current, I_{rms}.

$$I_{rms} = I_{pk}\sqrt{\frac{TTD_{max}}{3T}} \text{ [amps]}$$

$$I_{rms} = 4.25\sqrt{\frac{0.430}{3}} \text{ [amps]}$$

$$I_{rms} = 1.61 \text{ [amps]}$$

Step No. 10 Calculate the total energy-handling capability in watt-seconds, w-s.

$$ENG = \frac{LI_{pk}^2}{2} \text{ [w-s]}$$

$$ENG = \frac{(54\text{x}10^{-6})(4.25)^2}{2} \text{ [w-s]}$$

$$ENG = 0.000488 \text{ [w-s]}$$

Step No. 11 Calculate the electrical conditions, K_e.

$$K_e = 0.145\, P_o (\Delta B_m)^2 \times 10^{-4}$$

$$K_e = (0.145)(57)(0.25)^2 \times 10^{-4}$$

$$K_e = 0.0000517$$

Step No. 12 Calculate the core geometry, Kg.

$$K_g = \frac{(ENG)^2}{K_e \alpha} \quad [\mathrm{cm}^5]$$

$$K_g = \frac{(0.000488)^2}{(0.0000517)(1.0)} \quad [\mathrm{cm}^5]$$

$$K_g = 0.00461 \quad [\mathrm{cm}^5]$$

$$Kg = (0.00461)(1.25) = 0.00576 \ [\mathrm{cm}^5]$$

See Engineering Design Note No. 4 and 14.

Step No. 13 Select from Table 4.9 an EPC core comparable in core geometry Kg.

Core number	EPC-25B
Manufacturer	TDK
Magnetic material	PC30, μ_i = 2500
Magnetic path length	MPL = 4.62 cm
Window height	G = 1.74 cm
Core weight	Wtfe = 11 grams
Copper weight	W_{tcu} = 9.15 grams
Mean length turn	MLT = 4.55 cm
Iron area	A_c = 0.324 cm^2
Window Area	W_a = 0.565 cm^2
Area Product	A_p = 0.183 cm^4
Core geometry	Kg= 0.00522 cm^5
Surface area	At= 17.6 cm^2

Step No. 14 Calculate the current density, J .

$$J = \frac{2(\mathrm{HVG})\times 10^4}{B_m A_p K_u} \quad [\mathrm{amps / cm'}]$$

$$J = \frac{2(0.000488)\times 104}{(0.25)(0.183)(0.32)} \quad [\mathrm{amps\ /\ cm2}]$$

$$J = 666 \ [\mathrm{amps/\ cm'}]$$

Step No.]5 Calculate the required wire area, $A_{W(B)}$.

$$A_{w(B)} = \frac{I_{rms}}{J} \quad [\text{cm}^2]$$

$$A_{w(B)} = \frac{1.61}{666} \quad [\text{cm}^2]$$

$$A_{w(B)} = 0.00242 \quad [\text{cm}^2]$$

Step No. 16 Calculate the number of turns, N.

$$N = \frac{W_a K_u}{A_{w(B)}} \quad [\text{turns}]$$

$$N = \frac{(0.565)(0.32)}{(0.00242)} \quad [\text{turns}]$$

$$N = 74.7 \text{ use } 75 \text{ [turns]}$$

Step No. 17 Calculate the required gap, l_g.

$$l_g = \frac{0.4 \quad Z(N)(A1)X10^4}{\Delta B_m} [\text{cm}]$$

$$l_g = \frac{1.256(75)(4.25)x10^4}{0.25} \quad [\text{cm}]$$

$$l_g = 0.160 \text{ use } 0.157 \text{ [cm] or } 62 \text{ [roils]}$$

See Engineering Design Note No. 10 and 30.

Step No. 18 Calculate the new turns using a .157 cm gap.

$$N = \sqrt{\frac{L\left(l_g + \frac{MPL}{\mu_i}\right)(10^8)}{(0.4\pi)A_c}} \quad [\text{turns}]$$

$$N = \sqrt{\frac{(54x10^{-6})(10^8)\left((0.157) + \frac{(4.62)}{(2500)}\right)}{(1.256)(0.324)}} \quad [\text{turns}]$$

$$N = 45.9 \text{ use } 46 \text{ [turns]}$$

Step No. 19 Calculate the fringing flux, F.

$$F = \left(1 + \frac{l_g}{\sqrt{A_c}} \ln \frac{2G}{l_g}\right)$$

$$F = \left(1 + \frac{0.157}{\sqrt{0.324}} \ln \frac{2(1.74)}{0.157}\right)$$

$$F = 1.85$$

Step No. 20 Calculate the new turns, N.

$$N = \sqrt{\frac{l_g L}{(.4\ \pi) A_c F (10^{-8})}} \quad \text{[turns]}$$

$$N = \sqrt{\frac{((0.157)(5^4)(10^2)}{(1.256)(0.324)(1.85)}} \quad \text{[turns]}$$

$$N = 33.5 \text{ use } 34 \text{ [turns]}$$

Step No. 21 Calculate the maximum flux density, AB_m.

$$\Delta B_m = \frac{\quad}{l_g} \quad \text{[tesla]}$$

$$\Delta B_m = \frac{(1.256)(34)(4.25)(1.85)(10^{-4})}{0.157} \quad \text{[tesla]}$$

$$\Delta B_m = 0.214 \text{ [tesla]}$$

Step No. 22 Calculate the new wire size, $A_{W(B)}$.

$$A_{w(B)} = \frac{W_a K_u}{N} \quad [\text{cm}^2]$$

$$A_{W(B)} = \frac{(0{,}565)(0.32)}{(34)} \quad [\text{cm}^2]$$

$$A_{w(B)} = 0.00532 \quad [\text{cm}^2]$$

Step No. 23 Calculate the skin depth, y. The skin depth will be the radius of the wire.

$$Y = \frac{6{,}62}{\sqrt{f}} \quad [\text{cm}]$$

$$Y = \frac{6.62}{\sqrt{50 \times 10^3}} \quad [\text{cm}]$$

$$y = 0.0296 \text{ [cm]}$$

See Engineering Design Note No. 1.

Step No. 24 Calculate the wire area.

$$wire_A = \pi(\gamma)^2 \ [cm^2]$$
$$wire_A = (3.14)(0.0296)^2 [cm^2]$$
$$wire_A = 0.00275 \ [cm^2]$$

Step No. 25 Select a wire size with the required area from the wire Table 9.1. If the area is not within 10% of the required area, then go to the next smallest size.

$$A\ WG = \#\ 23$$
$$A_{w(B)} = 0.00259 \ [cm^2]$$
$$\mu\Omega / cm = 666$$
$$Au, = 0.00314 \ [cm^2] \text{ with insulation}$$

Step No. 26 "Calculate the required number of strands, S_n, and the new $\mu\Omega/cm$.

$$S_n = \frac{A_{w(B)}}{wire_A}$$
$$S_n = \frac{(0.00532)}{(0.00259)}$$
$$S_n = 2.05 \text{ use } 2$$
$$(new)\mu\Omega / cm = \frac{\mu\Omega / cm}{S_n} = \frac{666}{2} = 333$$

See Engineering Design Note No. 3.

Step No. 27 Calculate the winding resistance, R.

$$R = MLT(N)\left(\frac{\mu\Omega}{cm}\right) x10^{-6} \ [ohms]$$
$$R = 4.55(34)(333)x10^{-6} \ [ohms]$$
$$R = 0.0515 \ [ohms]$$

Step No. 28 Calculate the copper loss, P_{cu}.

$$P_{cu} = I_{rms}^2 R \ [watts]$$
$$P_{cu} = (1.61)^2(.0515) \ [watts]$$
$$P_{cu} = 0.133 \ [watts]$$

Step No. 29 Calculate the regulation, *a*, for this design.

$$a = \frac{P_{cu}}{P_o} \text{ xl 00 [\%]}$$

$$a = \frac{(0.133)}{(57)} \text{xl 00 [\%]}$$

$$a = 0.261 \text{ [\%]}$$

See Engineering Design Note No. 13.

Step No. 30 Calculate the watts per kilogram, WK, using the P material loss equation,

$$WK = 3.18(10\text{-}4)\sim)(15') \left(\frac{\Delta \bar{B}_m}{2}\right)^{(2.747)} \text{ [watts / kilogram]}$$

$$WK = 3.18\left(10^{-4}\right)(50000)^{(1.51)}\left(\frac{214}{2}\right)^{(2.747)} \text{ [watts / kilogram]}$$

$$WK = 8.54 \text{ [watts/kilogram] or [milliwatts / gram]}$$

Step No. 31 Calculate the core loss, Pf_e.

$$P_{fe} = \left(\frac{\text{milliwatts}}{\text{gram}}\right) W_{tfe} \text{x} 10^{-3} \text{ [watts]}$$

$$P_{fe} = (8.54)(11)\text{x}10\text{-}3 \text{ [watts]}$$

$$P_{fe} = 0.0939 \text{ [watts]}$$

Step No, 32 Calculate the total loss, core P_{fe} and copper P_{cu}, in watts P_{Σ}.

$$P_{\Sigma} = P_{fe} + P_{cu} \text{ [watts]}$$

$$P_{\Sigma} = (0.0939)+(0.133) \text{ [watts]}$$

$$P_{\Sigma} = 0.227 \text{ [watts]}$$

Step No. 33 Calculate the watt density, λ.

$$\lambda = \frac{P_{\Sigma}}{A_t} \text{ [watts/ cm']}$$

$$\lambda = \frac{0.227}{17.6} \text{ [watts/ cm']}$$

$$\lambda = 0.0129 \text{ [watts/ cm}^2\text{]}$$

Step No. 34 Calculate the temperature rise in degrees C.

$$T_r = 450(\lambda)^{(0.826)} \text{ [degrees}$$

$$?', = 450(0.0129)^{(0.826)} \text{[deg}$$

$$T_r = 12.4 \text{ [degrees C]}$$

Step No. 35 Calculate the window utilization, Ku for this de

$$Ku = \frac{NA_{w(B)}}{W_a}$$

$$K_u = \frac{2(34)(.00259)}{0.565}$$

$$KU = 0.312$$

Desire Summary

Core Part Number	EPC-25B
Magnetic Material	PC30
Frequency	50kHz
Flux Density	Δ0.214 T
Core Loss	0.0939 w
Permeability	2500
Millihenrys per 1K Turns	1560
Total Gap	62 mils
Window Utilization Ku	0.312
Winding Number	1
AWG	23
Strands	2
Total Turns	34
Resistance Ω	0.0515
Copper Loss	0.133W

Engineering Notes

Step No. 1 Calculate the total period, T.

$$T = \frac{1}{f} \quad \text{[seconds]}$$

$$T = \frac{1}{50000} \quad \text{[seconds]}$$

$$T = 20 \ [\mu\text{sec}]$$

Step No. 2 Calculate the maximum output power, P_o.

$$P_o = I_o(V_o + V_d) \ \text{[watts]}$$

$$P_o = 1.0(28 + 1.0) \ \text{[watts]}$$

$$P_o = 29 \ \text{[watts]}$$

Step No. 3 Calculate the maximum input current, I_{max}.

$$I_{in(max)} = \frac{P_o}{V_{min}\eta} \quad \text{[amps]}$$

$$I_{in(max)} = \frac{29}{(12)(0.8)} \quad \text{[amps]}$$

$$I_{in(max)} = 3.02 \ \text{[amps]}$$

Step No. 4 Calculate the transistor voltage drop, V_{vd}.

$$V_{vd} = I_{in(max)} R_Q \ \text{[volts]}$$

$$V_{vd} = (3.02)(0.1) \ \text{[volts]}$$

$$V_{vd} = 0.302 \ \text{[volts]}$$

Step No, 5 Calculate the minimum duty ratio, D_{min}.

$$D_{min} = \frac{(1 - D_w)(V_{min} - V_{vd})}{(V_o + V_d) + (V_{min} - V_{vd})}$$

$$D_{min} = \frac{(1-0.1)11.7}{(29+11.7)}$$

$$D_{min} = 0.259$$

Step No. 6 Calculate the maximum duty ratio, D_{max}.

$$D_{max} = (1 - D_{min} - D_w)$$
$$D_{max} = (1 - 0.259 - 0.1)$$
$$D_{max} = 0.641$$

Step No. 7 Calculate the minimum load resistance, R_{min} (maximum load condition).

$$R_{min} = \frac{(V_o + V_d)}{I_o} \text{[ohms]}$$

$$R_{min} = \frac{(*8_1 + 1,}{} \text{[ohms]}$$

$$R_{min} = 29 \text{ [ohms]}$$

Step No, 8 Calculate the maximum required inductance, L.

$$L \leq \frac{R_{min} T (1 - D_{max} - D_w)^2}{2} \text{[henrys]}$$

$$L \leq \frac{(29)(20 \times 10^{-6})(0.259)^2}{2} \text{ [henrys]}$$

$$L \leq 19.4 \text{ use } 19 \text{ [}\mu\text{h]}$$

Step No. 9 Calculate the maximum inductor current, AL

$$\text{Al} = \frac{2P_o}{D_{max}(V_{min} - V_{vd})} \text{ [amps]}$$

$$\Delta I = \frac{58}{(0.641)(11.7)} \text{ [amps]}$$

$$\Delta I = 7.73 \text{ [amps]}$$

Step No. 10 Calculate therm current, I_{rms}.

$$I_{rms} = I_{pk}\sqrt{\frac{TD_{max}}{3T}} \text{ [amps]}$$

$$I_{rms} = 7.73\sqrt{\frac{0.641}{3}} \text{ [amps]}$$

$$I_{rms} = 3.57 \text{ [amps]}$$

Step No. 11 Calculate the total energy-handling capability in watt-seconds, w-s.

$$ENG = \frac{LI_{pk}^2}{2} \quad [W-S]$$

$$ENG = \frac{(19x10^{-6})(7.73)^2}{2} \quad [w-s]$$

$$ENG = 0.000568 \quad [W-s]$$

Step No. 12 Calculate the electrical conditions, K_e.

$$K_e = 0.145\, P_o (\Delta B_m)^2 x10^{-4}$$

$$K_e = (0.145)(29)(0.25)^2 x10^{-4}$$

$$K_e = 0.0000263$$

Step No. 13 Calculate the core geometry Kg.

$$K_g = \frac{(ENG)^2}{K_e \alpha} \quad [cm^5]$$

$$= \frac{(0.000568)^2}{(0.0000263)(1.0)} \quad [cm^5]$$

$$K_g = 0.0123 \quad [cm^5]$$

Step No. 14 Select from Table 6.1 an MPP powder core comparable in core geometry K_g.

Core number----------: ----------	MP-55848
Manufacturer ----------	Magnetics
Magnetic path length ----------	MPL = 5.09 cm
Core weight ----------	Wtfe = 10 grams
Copper weight ----------	Wt_{cu} = 10.9 grams
Mean length turn ----------	MLT= 2.64 cm
Iron area ----------	A_c = 0.2% cm^2
Window Area ----------	W_a = 1.167 cm^2
Area Product ----------	A_p = 0.274 cm^4
Core geometry ----------	K_g = 0.00973 cm^5
Surface area ----------	At= 21,68 cm^2
Permeability ----------	μ_r = 60
Millihenrys per 1000 turns ----------	A_L = 32

Step No. 9 Calculate the number of turns, N.

$$N = 1000\sqrt{\frac{L_{(new)}}{L_{(1000)}}} \quad \text{[turns]}$$

$$N = 1000\sqrt{\frac{.019}{32}} \quad \text{[turns]}$$

$$N = 24.3 \text{ use } 24 \text{ [turns]}$$

Step No. 10 Calculate the current density J using a window utilization, Ku = 0.4.

$$J = \frac{2(ENG)\text{x}10^4}{K_u B_m A_p} \quad \text{[amps/cm'']}$$

$$J = \frac{2(0.000568)\text{x}10^4}{(0.4)(0.25)(0.274)} \quad \text{'amps ' cm,]}$$

$$J = 415 \quad \text{[amps/cm'']}$$

Step No. 11 Calculate the required permeability, $\Delta\mu$.

$$\Delta\mu = \frac{(B_m)(MPL)\text{x}10^4}{0.4\pi(W_a)(J)(K_u)}$$

$$\Delta\mu = \frac{(0.25\ )(5.09)\text{x}104}{(1{,}256)(1.167)(415)(0.4)}$$

$$\Delta\mu = 52.3 \text{ use } 60 \text{ perm}$$

See Engineering Design Note No. 9.

Step No. 12 Calculate the peak flux density, B_m.

$$B_m = \frac{0.4\pi(N)(I_{pk})(\mu_r\ )\text{x}10^{-4}}{MPL} \quad \text{[tesla]}$$

$$B_m = \frac{1.256(24\ )(7.73\ )(60)\text{x}10^{A}}{(5.09)} \quad \text{[tesla]}$$

$$B_m = 0.275 \quad \text{[tesla]}$$

Step No. 13 Calculate the required bare wire area, $A_{W(B)}$.

$$A_{w(B)} = \frac{I_{rms}}{J} \quad \text{[cm'']}$$

$$A_{w(B)} = \frac{3.57}{415} \quad \text{[cm'']}$$

$$A_{w(B)} = 0.00860 \quad \text{[cm'']}$$

Step No. 14 Select a wire size with the required area from the wire Table 9.1. If the area is not within 10% of the required area, then go to the next smallest size.

$$AWG = \#18$$
$$A_{w(B)} = 0.00823 \ [cm^2]$$
$$\mu\Omega / cm = 209$$

See Engineering Design Note No. 7.

Step No. 15 Calculate the skin depth, y. The skin depth will be the radius of the wire.

$$y = \frac{6.62}{\sqrt{f}} \ [cm]$$
$$y = \frac{6.62}{\sqrt{50x10^3}} \ [cm]$$
$$y = 0.0296 \ [cm]$$

See Engineering Design Note No. 1.

Step No. 16 Calculate the wire area.

$$wire_A = \pi(\gamma)^2 \ [cm^2]$$
$$wire_A = (3.14)(0.0296)^2 [cm^2]$$
$$wire_A = 0.00275 \ [cm^2]$$

Step No. 17 Select a wire size with the required area from the wire Table 9.1. If the area is not within 10% of the required area, then go to the next smallest size.

$$AWG = \#23$$
$$A_{w(B)} = 0.00259 \ [cm^2]$$
$$\mu\Omega / cm = 666$$
$$A_w = 0.00314 \ [cm^2] \text{ with insulation}$$

Step No. 18 Calculate the required number of strands, S_n, and the new $\mu\Omega/cm$.

$$S_n = \frac{A_{w(B)}}{wire_A}$$
$$S_n = \frac{(0.00860)}{(0.00259)}$$
$$S_n = 3.3 \text{ use } 4$$
$$(new)\mu\Omega / cm = \frac{\mu\Omega / cm}{S_n} = \frac{666}{4} = 167$$

See Engineering Design Note No. 3.

Step No. 19 Calculate the winding resistance, R.

$$R = MLT(N)\left(\frac{\mu\Omega}{cm}\right) x10^{-6} \quad [ohms]$$

$$R = 2.64(24)(167)x10^{<} \quad [\text{ohms}]$$

$$R = 0.0106 \quad [\text{ohms}]$$

Step No. 20 Calculate the copper loss, P_{cu}.

$$P_{cu} = I_{rms}^2 R \quad [\text{watts}]$$

$$P_{cu} = (3.57)^2(.0106) \quad [\text{watts}]$$

$$P_{cu} = 0.135 \quad [\text{watts}]$$

Step No. 21 Calculate the magnetizing force in oersteds, H.

$$H = \frac{(0.4\pi)NI_{pk}}{MPL} \quad [\text{oersteds}]$$

$$H = \frac{(1.256)(24)(7.73)}{5.09} \quad [\text{oersteds}]$$

$$H = 45.8 \quad [\text{oersteds}]$$

See Engineering Design Note No. 8.

Step No. 22 Calculate the regulation, *a*, for this design.

$$\alpha = \frac{P_{cu}}{P_o} x100 \quad [\%]$$

$$\alpha = \frac{(0.135)}{(29)} x100 \quad [\%]$$

$$a = 0.466 \quad [\%]$$

Step No. 23 Calculate the watts per kilogram, WK, using MPP power cores Figure 6.2.

$$WK = 5.15x10^{-3}(f)^{(1.23)}\left(\frac{\Delta B_m}{2}\right)^{(2.12)} \quad [\text{watts / kilogram}]$$

$$WK = 5.15x10^{-3}(50000)^{(1.23)}(0.138)^{(2.12)} \quad [\text{watts/ kilogram}]$$

$$WK = 46.6 \quad [\text{watts/ kilogram}] \text{ or } [\text{milliwatts / gram}]$$

Step No. 24 Calculate the core loss, P_{fe} ·

$$P_{fe} = \left(\frac{\text{milliwatts}}{\text{gram}}\right) W_{tfe} x10^{-3} \quad \text{[watts]}$$

$$P_{fe} = (46.6)(10)x10^{-3} \text{[watts]}$$

$$P_{fe} = 0.466 \text{ [watts]}$$

Step No. 25 Calculate the total loss, P_{Σ}, core P_{fe} and copper P_{cu}.

$$P_{\Sigma} = P_{fe} + P_{cu} \text{ [watts]}$$

$$P_{\Sigma} = (0.466)+(0.135) \text{ [watts]}$$

$$P_{\Sigma} = 0.601 \text{ [watts]}$$

Step No. 26 Calculate the watt density, λ.

$$\lambda = \frac{P_{\Sigma}}{A_t} \text{ [watts/cm'']}$$

$$\lambda = \frac{0.601}{21.68} \text{ [watts/ cm'']}$$

$$A = 0.0277 \text{ [watts/ cm'']}$$

Step No. 27 Calculate the temperature rise in degrees C.

$$T_r = 450(\lambda)^{(0.826)} \text{ [degrees C]}$$

$$T_r = 450(0.0277)^{(0.826)} \text{[degrees C]}$$

$$T_r = 23.3 \text{ [degrees C]}$$

Step No. 28 Calculate the window utilization, Ku.

$$Ku = \frac{NS_n A_{w(B)}}{W_a}$$

$$K_u = \frac{(24)(4)(0.00259)}{(1.167)}$$

$$K_u = 0.213$$

Design Summary

Core Part Number	MP-55848
Magnetic Material	MPP
Frequency	50kHz
Flux Density	A 0.275 T
Core Loss	0.466 w
Permeability	60
Millihenrys per 1K Turns	32
Window Utilization Ku	0.213
Winding Number	1
AWG	23
Strands	4
Total Turns	24
Resistance Ω	0.0106
Copper Loss	0.135 w

Engineering Notes

315
Buck-Boost Isolated Discontinuous Current Design using an MPP Powder Core

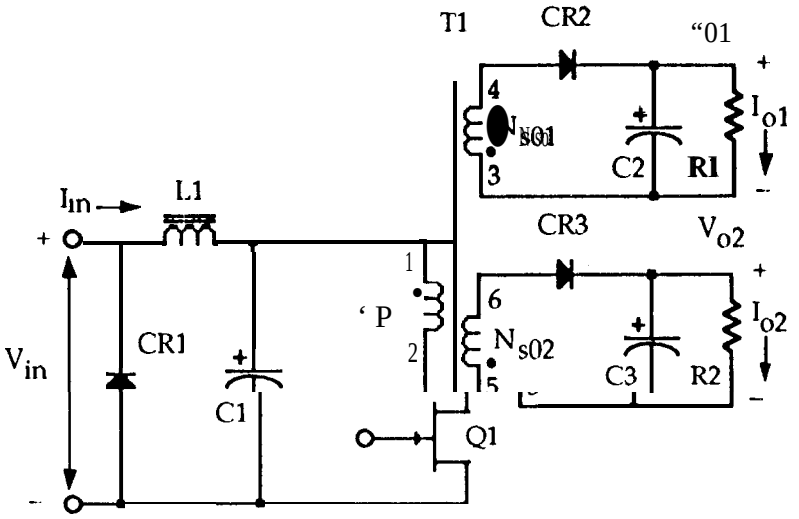

Figure 3.15 Buck-Boost isolated discontinuous current converter.

Buck-Boost Isolated Discontinuous Current Design Specification

1.	Input voltage max	V_{max} = 35 volts
2.	Input voltage nom	V_{nom} = 28 volts
3.	Input voltage min	Vmin = 22 volts
4.	Output voltage	V_o = 5 volts
5.	Output current	1_0 = 5 amps
6.	Output voltage bias	V_o = 12 volts
7.	Output current bias	1_0 = 0.5 amps
8.	Window utilization	Ku= 0.4
9.	Frequency	f=50kHz
10.	Converter efficiency	η = 80 %
11.	Maximum duty ratio	D_{max} = 0.45
12.	Dwell time duty ratio	D_w = 0.1
13.	Regulation	a = 0.5 %
14.	Operating flux density	B_m = 0.25 tesla
15.	Diode voltage	V_d = 1.0 volt
16.	Transistor on resistance	R_Q = 0.10 ohms

This design procedure will work equally well with all of the various powder cores. Care must be taken regarding maximum flux density with different materials.

Step No. 1 Calculate the total period, T.

$$T = \frac{1}{7} \quad \text{[seconds]}$$

$$T = \frac{1}{50000} \quad \text{[seconds]}$$

$$T = 20 \ [\mu\text{sec}]$$

Step No. 2 Calculate the maximum transistor on time, t_{on}.

$$t_{on} = TD_{max} \ [\mu\text{sec.}]$$

$$t_{on} = (20\text{x}10^{\text{<}})(0.45) \ [\mu\text{sec.}]$$

$$t_{on} = 9.0 \ [\mu\text{sec.}]$$

Step No. 3 Calculate the total secondary load power, P_{to}.

$$P_o = I_o(V_o + V,) \ \text{[watts]}$$

$$P_{o1} = (5)(5+1) \ \text{[watts]}$$

$$P_{o2} = (0.5)(12+1) \ \text{[watts]}$$

$$P_{to} = P_{o1} + P_{o2} \ \text{[watts]}$$

$$P_{to} = (30) + (6.5) \ \text{[watts]}$$

$$P_{to} = 36.5 \ \text{[watts]}$$

Step No, 4 Calculate the maximum input current, I_{max}.

$$I_{in(max)} = \frac{P_o}{V_{min}\eta} \ \text{[amps]}$$

$$1_{in(max)} = \frac{36.5}{(22)(0.8)} \quad \text{[amps]}$$

$$I_{in(max)} = 2.07 \ \text{[amps]}$$

Step No. 5 Calculate the transistor voltage drop, V_{vd}.

$$V_{vd} = 1_{in(max)} R_Q \ \text{[volts]}$$

$$V_{vd} = 2.07(0.1) \ \text{[volts]}$$

$$V_{d} = 0.207 \ \text{[volts]}$$

Step No. 6 Calculate the primary voltage, V_p.

$$V_p = V_{min} - V_{vd} \quad \text{[volts]}$$
$$V_p = 22\text{-}0.207 \quad \text{[volts]}$$
$$V_p = 21.79 \quad \text{[volts]}$$

Step No. 7 Calculate the primary peak current, I_{ppk}.

$$I_{ppk} = \frac{2TP_{to}}{\eta V_p t_{on(max)}} \quad \text{[amps peak]}$$
$$I_{ppk} = \frac{2(20\text{x}10^{A})(36.5)}{(0.80)(21.79)(9\text{x}10^{A})} \quad \text{[amps peak]}$$
$$I_{ppk} = 9.31 \quad \text{[amps peak]}$$

Step No. 8 Calculate the primary rms current, I_{prms}.

$$I_{prms} = I_{ppk}\sqrt{\frac{t_{on}}{3T}} \quad \text{[amps]}$$
$$I_{prms} = 9.31\sqrt{\frac{9}{(20)}} \quad \text{[amps]}$$
$$I_{prms} = 3.61 \quad \text{[amps]}$$

Step No..9 Calculate the required primary inductance, L.

$$L = \frac{V_p t_{on(max)}}{I_{ppk}} \quad \text{[henry]}$$
$$L = \frac{(21.79)(9\text{x}10^{-6})}{(9.31)} \quad \text{[henry]}$$
$$L = 21 \quad [\mu h]$$

Step No. 10 Calculate the energy-handling capability in watt-seconds, w-s.

$$ENG = \frac{LI_{ppk}^2}{2} \quad \text{[w - s]}$$
$$ENG = \frac{(21\text{x}10^{-6})(9{,}31)2}{2} \quad \text{[w -s]}$$
$$ENG = 0.000910 \quad \text{[W -s]}$$

Step No. 11 Calculate the electrical conditions, K_e.

$$K_e = 0.145 P_{to} B_m^2 x10^{-4}$$
$$K_e = (0.145)(36.5)(0.25)^2 x10^{A}$$
$$K_e = 0.0000331$$

Step No. 12 Calculate the core geometry, Kg.

$$K_g = \frac{(ENERGY)^2}{K_e \alpha} \quad [cm^5]$$
$$= \frac{(0.000910)^2}{(0.0000331)(0.5)} \quad [cm^5]$$
$$K_g = 0.0500 \ [cm^5]$$

See Engineering Design Note No. 4.

Step No. 13 Select from Table 6.1 an MPP powder core comparable in core geometry Kg.

Core number	55930-A2
Manufacturer	Magnetics Inc.
Magnetic path length	MPL = 635 cm
Core weight	Wtfe = 36 grams
Copper weight	Wt_{cu} = 22.3 grams
Mean length turn	MLT = 3.94 cm
Iron area	$A_c = 0.661\ cm^2$
Window Area	Wa = 1.588 cm^2
Area Product	$A_p = 1.04958165\ cm^4$
Core geometry	K_g = 0.07038075 cm5
Surface area	At= 38.38 cm2
Core Permeability	mu= 125
Millihenrys per 1000 turns	rnh = 157

Step No. 14 Calculate the number of primary turns, N_p.

$$N = 1000\sqrt{\frac{L_{(new)}}{L_{(1000)}}} \quad [turns]$$
$$N = 1000\sqrt{\frac{.021}{157}} \quad [turns]$$
$$N = 11.6 \text{ use } 12 \ [turns]$$

Step No. 15 Calculate the current density, J, using a window utilization Ku = 0.4.

$$J = \frac{2(\text{ENG})\text{X}104}{B_m A_p K_u} \quad [\text{amps} / \text{cm}^2]$$

$$J = \frac{2(0.000910)\text{x}104}{(0.25)(1.049)(0.40)} \quad \text{'amps ' cm2]}$$

$$J = 173 \ [\text{amps}/ \text{cm}^2]$$

Step No, 16 Calculate the required incremental permeability, $\Delta\mu$.

$$\Delta\mu = \frac{(B_m)(MPL)\text{x}10^4}{0.4\pi(W_a)(J)(K_u)}$$

$$\Delta\mu = \frac{(.25)(6.35)\text{x}10^4}{(1.256)(1{,}588)(173)(0.4)}$$

$$\Delta\mu = 115$$

See Engineering Design Note No. 18.

Step No. 17 Calculate the peak delta flux density, AB.

$$\text{AB} = \frac{0.4\pi(N_p)(I_{ppk})(\Delta\mu)\text{x}10^{-4}}{MPL} \quad [\text{tesla}]$$

$$\Delta B = \frac{1.256\,(12)(9.31)(125)\text{x}10^{-4}}{(6.35)} \quad [\text{tesla}]$$

$$\text{AB} = 0.276 \ [\text{tesla}]$$

Step No. 18 Calculate the primary wire area, $A_{pw(B)}$.

$$A_{pw(B)} = \frac{I_{prms}}{J} \quad [\text{cm}^2]$$

$$A_{pw(B)} = \frac{3.61}{173} \ [\text{cm}^2]$$

$$A_{pw(B)} = 0.0209 \ [\text{cm}^2]$$

Step No. 19 Select a wire size with the required area from the wire Table 9.1. If the area is not within 10?4o of the required area, then go to the next smallest size.

$$AWG = \#14$$

$$A_{w(B)} = 0.0208 \ [\text{cm}^2]$$

$$\mu\Omega / cm = 82{,}8$$

Step No. 20 Calculate the skin depth, γ. The skin depth will be the radius of the wire.

$$\gamma = \frac{6.62}{\sqrt{f}} \quad [\text{cm}]$$

$$\gamma = \frac{6.62}{\sqrt{50\text{x}10^3}} \quad [\text{cm}]$$

$$y = 0.0296 \ [\text{cm}]$$

See Engineering Design Note No. 1.

Step No. 21 Calculate the wire area.

$$wire_A = \pi(\gamma)^2 \ [\text{cm}^2]$$

$$wire_A = (3.14)(0.0296)^2 \quad [\text{cm}^2]$$

$$wire_A = 0{,}00275 \quad [\text{cm}^2]$$

Step No. 22 Select a wire size with the required area from the wire Table 9.1. If the area is not within 10% of the required area, then go to the next smallest size,

$$AWG = \#\ 23$$

$$A_{w(B)} = 0.00259 \ [\text{cm}^2]$$

$$\mu\Omega / cm = 666$$

$$A_{w(I)} = 0.00314 \quad [\text{cm}^2] \ \text{with insulation}$$

Step No. 23 Calculate the required number of primary strands, S_{np}, and the new $\mu\Omega/cm$.

$$S_{np} = \frac{A_{wp}}{wire_A}$$

$$S_{np} = \frac{(0.0208)}{(0.00259)}$$

$$s_{np} = 8.03 \ \text{use} \ 8$$

$$(new)\mu\Omega / cm = \frac{\mu\Omega / cm}{S_{np}}$$

$$(new)\mu\Omega / cm = \frac{666}{8}$$

$$(new)\mu\Omega / cm = 83{,}3$$

Step No. 24 **Calculate** the **primary winding resistance,** R_p.

$$R_p = MLT(N_p)\left(\frac{\mu\Omega}{cm}\right)x10^{-6} \quad \text{[ohms]}$$

$$R_p = (3.94)(12)(83.3)x10^{-6} \quad \text{[ohms]}$$

$$R_p = 0.00394 \quad \text{[ohms]}$$

Step No. 25 Calculate the primary copper loss, I'_p.

$$P_p = I_p^2 R_p \quad \text{[watts]}$$

$$P_p = (3.61)^2(.00394) \quad \text{[watts]}$$

$$P_p = 0.0513 \quad \text{[watts]}$$

Step No. 26 Calculate the secondary turns, N_s

$$N_s = \frac{N_p(V_o + V,)(1 - D_{max} - D_w)}{(V_p D_{max})} \quad \text{[turns]}$$

$$N_{sol} = \frac{12(5 + 1)(1 - 0.45 - 0.1)}{(21.79)(0.45)} = 3\ 3 \text{ use } 4 \text{ [turns]}$$

$$N_{S02} = \frac{12(12 + 1)(1 - 0.45 - 0.1)}{(21.79)(0.45)} = 7\ 2 \text{ use } 7 \text{ [turns]}$$

Step No. 27 Calculate the secondary peak current, I_{spk}.

$$I_{spk} = \frac{2I_o}{(1 - D_{max} - D",)} \quad \text{amps]}$$

$$I_{spk01} = \frac{2(5.0)}{(1 - 0.45 - 0.1)} = 22,2 \text{ [amps]}$$

$$I_{spk02} = \frac{2(0.5)}{(1 - 0.45 - 0.1)} = 2,22 \text{ [amps]}$$

Step No. 28 Calculate the secondary rms current, I_{srms}.

$$I_{srms} = I_{spk}\sqrt{\frac{(1 - D_{max} - D_w)}{3}} \quad \text{[amps]}$$

$$I_{srms01} = (22.2)\sqrt{\frac{(1 - 0.45 - 0.1)}{3}} = 8.60 \quad \text{[amps]}$$

$$I_{srms02} = (2.22)\sqrt{\frac{(1 - 0,45 - 0.1)}{3}} = 0.860 \quad \text{[amps]}$$

Step No. 29 Calculate the secondary wire area, $A_{sw(B)}$.

$$A_{sw(B)} = \frac{I_{srms}}{J} \quad [\text{cm}']$$

$$A_{pw01} = \frac{8.60}{173} = 0.0497 \ [\text{cm}^2]$$

$$A_{pw02} = \frac{0.860}{173} = 0.00497 \ [\text{cm}']$$

Step No. 30 Select a wire size with the required area from the wire Table 9.1. If the area is not within 10% of the required area, then go to the next smallest size.

$$AWG = \#10$$

$$A_{sw01} = 0.0526 \ [\text{cm}^2]$$

$$\mu\Omega / cm = 32.7$$

$$AWG = \#20$$

$$A_{sw02} = 0.00519 \ [\text{cm}^2]$$

$$\mu\Omega / cm = 322$$

Step No. 31 Calculate the number of secondary strands, S_{ns01}, and the $\mu\Omega/cm$.

$$S_{ns01} = \frac{A_{sw01}}{wire_A}$$

$$S_{ns01} = \frac{(0.0497)}{(0.00259)}$$

$$S_{ns01} = 19.2 \text{ use } 19$$

$$(new)\mu\Omega / cm = \frac{\mu\Omega}{S_{ns01}}$$

$$(new)\mu\Omega / cm = \frac{666}{19}$$

$$(new)\mu\Omega / cm = 35$$

Step No. 32 Calculate the winding resistance, R_{s01}.

$$R_{s01} = MLT(N_{s01})\left(\frac{\mu\Omega}{cm}\right) \times 10^{-6} \ [\text{ohms}]$$

$$R_{s01} = 3.94(4)(35)\text{X}10^{4} [\text{ohms}]$$

$$R_{s01} = 0.000552 \ [\text{ohms}]$$

Step No. 33 Calculate the secondary copper loss, P_{s01}.

$$P_{s01} = I_{s01}^2 R_{s01} \text{ [watts]}$$
$$P_{s01} = (8.60)^2(.000552) \text{ [watts]}$$
$$P_{s01} = 0.0408 \text{ [watts]}$$

Step No. 34 Calculate the number of secondary strands, S_{ns02}, and the $\mu\Omega/cm$.

$$S_{ns02} = \frac{A_{ws02}}{wire_A}$$
$$S_{ns02} = \frac{(0.00497)}{(0.00259)}$$
$$S_{ns02} = 1.92 \text{ use } 2$$
$$(new)\mu\Omega/cm = \frac{\mu\Omega/cm}{S_{ns02}}$$
$$(new)\mu\Omega/cm = \frac{666}{2} = 333$$

Step No. 35 Calculate the winding resistance, R_{s02}.

$$R_{s02} = MLT(N_{s02})\left(\frac{\mu\Omega}{cm}\right)x10^{-6} \text{ [ohms']}$$
$$R_{S02} = 3.94(7)(333)X10^{4} \text{ [ohms]}$$
$$R_{s02} = 0.00918 \text{ [ohms]}$$

Step No. 36 Calculate the secondary copper loss, P_{s02}.

$$P_{s02} = I_{s02}^2 R_{s02} \text{ [watts]}$$
$$P_{s02} = (0.860)^2(.00918) \text{ [watts]}$$
$$P_{s02} = 0.00679 \text{ [watts]}$$

Step No. 37 Calculate the window utilization, Ku.

$$[\text{turns}] = (N_p S_{np}) = (84) \quad [\text{pi-nary}]$$

$$[\text{turns}] = (N_{s01} S_{ns01}) = (76) \quad [\text{secondary}]$$

$$[\text{turns}] = (N_{s02} S_{ns02}) = (14) \quad [\text{secondary}]$$

$$N_t = 174 \text{ turns \# } 23$$

$$K_u = \frac{N_t A_w}{W_a}$$

$$K_u = \frac{(174)(0.00259)}{(1.588)}$$

$$K_u = 0.284$$

Step No. 38 Calculate the total copper loss, P_{cu}.

$$P_{cu} = P_p + P_{s01} + P_{s02} \quad [\text{watts}]$$

$$P_{cu} = (0.0513) + (0.0408) + (0.00679) \quad [\text{watts}]$$

$$P_{cu} = 0.0989 \quad [\text{watts}]$$

Step No. 39 Calculate the regulation a for this design.

$$\alpha = \frac{P_{cu}}{P_o} x100 \quad [\%]$$

$$= \frac{(0.0989)}{(33.5)} x100 [\%]$$

$$a = 0.295 \quad [\%]$$

Step No. 40 Calculate the magnetizing force in oersteds, H.

$$H = \frac{(0.4\pi) N_p I_{pk}}{MPL} \quad [\text{oersteds}]$$

$$H = \frac{(0.4\pi)(12)(9.31)}{6.35} \quad [\text{oersteds}]$$

$$H = 22.1 \quad [\text{oersteds}]$$

Step No. 41 Calculate the watts per kilogram ,WK.

$$WK = 0.00391 (f)^{(1.28)} \left(\frac{\Delta B}{2}\right)^{(2.14)} \quad [\text{watts/ kilogram}]$$

$$WK = 0.00391 (50000)^{(1.28)} (0.138)^{(2.14)} \quad [\text{watts/kilogram}]$$

$$WK = 58.4 \quad [\text{watts/kilogram}] \text{ or } [\text{milliwatts / gram}]$$

Step No. 42 Calculate the core loss, pf_e.

$$P_{fe} = \left(\frac{\text{milliwatts}}{\text{gram}}\right) W_{tfe} x10^{-3} \quad \text{[watts]}$$

$$P_{fe} = (58.4)(36)x10\text{-}3 \text{ [watts]}$$

$$P_{fe} = 2.10 \text{ [watts]}$$

Step No. 43 Calculate the total loss, core P_{fe} and copper P_{cu}, in watts P_{Σ}.

$$P_{\Sigma} = P_{fe} + P_{cu} \text{ [watts]}$$

$$P_{\Sigma} = (2.10) + (0.0989) \text{ [watts]}$$

$$P_{\Sigma} = 2.199 \text{ [watts]}$$

Step No. 44 Calculate the watt density, λ.

$$\lambda = \frac{P_{\Sigma}}{A_t} \text{ [watts/ cm}^2\text{]}$$

$$\lambda = \frac{2.199}{38.4} \text{ [watts/ cm}^2\text{]}$$

$$\lambda = 0.0573 \text{ [watts/ cm}^2\text{]}$$

Step No. 45 Calculate the temperature rise in degrees C.

$$T_r = 450(\lambda)^{(0.826)} \text{ [degrees C]}$$

$$T_r = 450(0.0573)^{(0.826)} \text{ [degrees C]}$$

$$T_r = 42.38 \text{ [degrees C]}$$

Design Summary

Core Part Number	MP-55930
Magnetic Material	MPP
Frequency	50kHz
Flux Density	A 0.276 T
Core Loss	2.1 w
Permeability	125
Millihenrys per 1K Turns	157
Window Utilization Ku	0.284

Winding Number	1	2	3
AWG	23	23	23
Strands	8	21	2
Total Turns	12	4	7
Resistance Ω	0.00394	0.000552	0.00918
Copper Loss	0.0513 w	0.0408 W	0.00679 w

316
Boost Converter Continuous Current Design using a PQ Ferrite Core

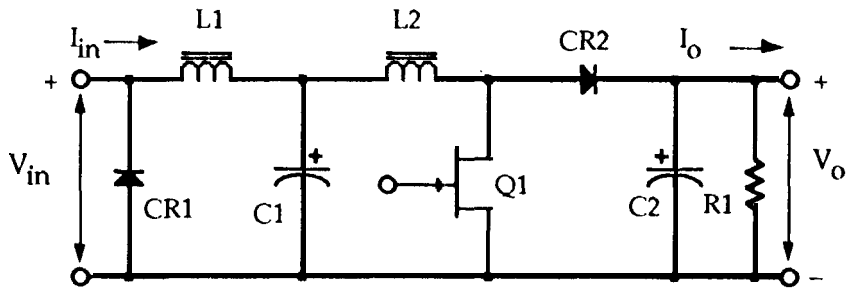

Figure 3.16 Continuous current boost converter.

Continuous Current Boost Converter
Inductor Design specification

1.	Input voltage	v_{nom} =40 volts
2.	input voltage	v_{min} = 30 volts
3.	Input voltage	V_{max} = 50 volts
4.	Output voltage	V.= 56 volts
5.	Output current	1_0= 1 amp
6.	Output current minimum	$I_{o(min)}$ =0.2 amps
7.	Frequency	f = .50 kHz
8.	Efficiency	η = 90%
9.	Regulation	α = 1 %
10.	Operating flux density	B_m = 0.25 tesla
11.	Window utilization	Ku= 0.32
12.	Diode voltage drop	V_d = 1.0 volt
13.	Transistor on resistance	R_Q = 0.1 ohms

Step No. 1 Calculate the total period, T.

$$T = \frac{1}{7} \quad \text{[seconds]}$$

$$T = \frac{1}{50000} \quad \text{[seconds]}$$

$$T = 20 \quad [\mu\text{sec}]$$

Step No. 2 Calculate the maximum output power, P_o.

$$P_o = (V_o + V_d)(I_o) \quad \text{[watts]}$$

$$P_o = (56 + 1.0)(1.0) \quad \text{[watts]}$$

$$PO = 57 \quad \text{[watts]}$$

Step No. 3 Calculate the maximum input current, I_{max}.

$$I_{in(max)} = \frac{P_o}{V_{min}} \quad \text{[amps]}$$

$$I_{in(max)} = \frac{57}{(30)(0.9)} \quad \text{[amps]}$$

$$I_{in(max)} = 2.11 \quad \text{[amps]}$$

Step No. 4 Calculate the transistor voltage drop, V_{vd}.

$$V_{vd} = I_{in(max)} R_Q \quad \text{[volts]}$$

$$V_{vd} = (2.11)(0.1) \quad \text{[volts]}$$

$$V_{vd} = 0.211 \quad \text{[volts]}$$

Step No. 5 Calculate the maximum duty ratio, D_{max}.

$$D_{max} = \left(1 - \left(\frac{(V_{min} - V_{vd})}{V_o + V_d}\right)\right)$$

$$D_{max} = \left(1 - \left(\frac{(30 - 0.211)}{56 + 1.0}\right)\right)$$

$$D_{max} = 0.477$$

Step No. 6 Calculate the minimum duty ratio, D_{min}.

$$D_{min} = \left(1 - \left(\frac{(V_{max} - V_{vd})}{V_o + V_d}\right)\right)$$

$$D_{min} = \left(1 - \left(\frac{(50 - 0.211)}{56 + 1.0}\right)\right)$$

$$D_{min} = 0.127$$

Step No, 7 Calculate the minimum load resistance, R_{max}, (minimum load condition).

$$R_{max} = \frac{V_o}{I_{o(min)}} \text{ [ohms]}$$

$$R_{max} = \frac{57}{0.2} \text{ [ohms]}$$

$$R_{max} = 285 \text{ [ohms]}$$

Step No. 8 Calculate the required inductance, L.

$$L = \frac{R_{max} T D_{min} (1 - D_{min})^2}{2} \text{ [henrys]}$$

$$L = \frac{(285)(20\text{x}10^{-6})(0.127)(0.873)2}{2} \text{ [henrys]}$$

$$L = 274.8 \text{ use } 275 \text{ [}\mu\text{h]}$$

Step No. 9 Calculate the delta current, AL

$$\Delta I = \frac{(V_{max} - V_{vd}) D_{min} T}{L} \text{ [amps]}$$

$$\text{AI} = \frac{(50 - 0.211)(0.127)(20\text{x}10^{-6})}{(0.000275)} \text{ [amps]}$$

$$\text{Al} = 0.460 \text{ [amps]}$$

Step No, 10 Calculate the peak current, I_{pk}.

$$I_{pk} = \frac{I_o}{(1 - D_{max})} + \frac{\Delta I}{2} \text{ [amps]}$$

$$I_{pk} = \frac{(1.0)}{(1 - 0.477)} + \frac{0.460}{(2)} \text{ [amps]}$$

$$I_{pk} = 2.14 \text{ [amps]}$$

Step No. 11 Calculate the rms current, I_{rms}.

$$I_{rms} = \sqrt{\left(\left(I_{pk}\right)^2 - \left(I_{pk}\right)(\Delta I) + \frac{(\Delta I)^2}{3}\right)(D_{max})} \quad \text{[amps]}$$

$$I_{rms} = \sqrt{\left((2.14)^2 - (2.14)(0.460) + \frac{(0.460)^2}{3}\right)(0.477)} \quad \text{[amps]}$$

$$I_{rms} = 1,32 \text{ [amps]}$$

See Engineering design Note No. 16

Step No. 12 Calculate the total energy-handling capability in watt-seconds, w-s.

$$ENG = \frac{LI_{pk}^2}{2} \quad \text{[w - s]}$$

$$ENG = \frac{(275 \times 10^{A})(2.14)^2}{2} \quad \text{[w s]}$$

$$ENG = 0.000630 \text{ [W -s]}$$

Step No. 13 Calculate the electrical conditions, K_e.

$$K_e = 0.145 P_o B_m^2 \times 10^{-4}$$

$$K_e = (0.145)(57)(0.25)^2 \times 10^{-4}$$

$$K_e = 0.0000517$$

Step No. 14 Calculate the core geometry, Kg.

$$K_g = \frac{(ENG)^2}{K_e \alpha} \quad \text{[cm}^5\text{]}$$

$$= \frac{(0.000630)^2}{(0.0000517)(1.0)} \quad \text{[cm}^5\text{]}$$

$$K_g = 0.00768 \text{ [cm}^5\text{]}$$

$$K_g = (0.00768)(1.25) = 0.0096 \text{ [cm}^5\text{]}$$

See Engineering design Note No. 4 and 14.

Step No. 15 Select from Table 4.3a PQ core comparable in core geometry Kg.

Core number	PQ-42016
Manufacturer	Magnetics Inc.
Magnetic material	P, μ_i = 2500
Magnetic path length	MPL = 3.74 cm
Window height	G= 1.001 cm
Core weight	Wtfe = 13 grams
Copper weight	W_{tcu} = 6.62 grams
Mean length turn	MLT = 4.34 cm
Iron area	A_c = 0.580 cm^2
Window Area	W_a = 0.428 cm^2
Area Product	A_p = 0.248 cm^4
Core geometry	K_g = 0.0132 cm5
Surface area	At= 17.4 cm^2

Step No. 16 Calculate the current density, J .

$$J = \frac{2(\ ENG)X104}{B_m A_p K_u} \quad [\text{amps / cm'}]$$

$$J = \frac{2(\ O.\ OOO63)X1O4}{(0.25)(0.248)(0.32)} \quad \text{'amps ' cm,]}$$

$$J = 635 \ [\text{amps/ cm'}]$$

Step No. 17 Calculate the required wire area, $A_{W(B)}$.

$$A_{w(I)} = \frac{I_{rms}}{J} \quad [\text{cm'}]$$

$$Au,(,) = \frac{1.32}{635} \quad [\text{cm}^2]$$

$$A_{w(I)} = 0.00208 \ [\text{cm'}]$$

Step No. 18 Calculate the number of turns, N.

$$N = \frac{W_a K_u}{A_{w(B)}} \quad [\text{turns}]$$

$$N = \frac{(0.428)(0.32)}{(0.00208)} \quad [\text{turns}]$$

$$N = 65.8 \text{ use } 66 \ [\text{turns}]$$

Step No. 19 calculate the required gap, l_g.

$$l_g = \left(\frac{0.4\pi N I_{pk} x10^{-4}}{B_m}\right) - \left(\frac{MPL}{\mu_r}\right) \quad [cm]$$

$$l_g = \left(\frac{(1.256)(66)(2.14)x10^{A}}{0.25}\right)\left(\frac{3.74}{2500}\right) [cm]$$

$$l_g = 0.0695 \text{ use } 0.0610 \text{ [cm] or } 24 \text{ [roils]}$$

See Engineering Design Note No 10 and 30.

Step No. 20 Calculate the new turns using a .0610 cm gap.

$$N = \sqrt{\frac{L\left(l_g + \frac{MPL}{\mu_i}\right)(10^8)}{(0.4\pi)A_c}} \quad [turns]$$

$$N = \sqrt{\frac{(275x10^{-6})(10^8)\left((0.0610) + \frac{(3.74)}{(2500)}\right)}{(1.256)(0.580)}} \quad [turns]$$

$$N = 48.57 \text{ use } 49 \text{ [turns]}$$

Step No. 21 Calculate the fringing flux, F.

$$F = \left(1 + \frac{l_g}{\sqrt{A_c}} \ln\frac{2G}{l_g}\right)$$

$$F = \left(1 + \frac{0.0610}{\sqrt{0.580}} \ln\frac{2(1.001)}{0.0610}\right)$$

$$F = 1.279$$

Step No. 22 Calculate the new turns, N.

$$N = \sqrt{\frac{l_g L}{(.4\pi)A_c F(10^{-8})}} \quad [turns]$$

$$N = \sqrt{\frac{(0.061)(275x10^{-6})(10^8)}{(1.256)(0.580)(1.279)}} \quad [turns]$$

$$N = 42.4 \text{ use } 42 \text{ [turns]}$$

Step No, *23* Calculate the maximum flux density, B_m.

$$B_m = \frac{(0.4\pi)NI_{pk}F(10^{-4})}{l_g + \frac{MPL}{\mu_r}} \quad \text{[tesla]}$$

$$B_m = \frac{(1.256)(42)(2.14)(1.279)(10^{-4})}{0.0508 + \left(\frac{3.74}{2500}\right)} \quad \text{[tesla]}$$

$$B_m = 0.231 \quad \text{[tesla]}$$

Step No. 24 Calculate the new wire size, AW(B).

$$A_{w(B)} = \frac{W_a K_u}{N} \quad [\text{cm}^2]$$

$$A_{w(B)} = \frac{(0.428)(0.32)}{(42)} \quad [\text{cm}^2]$$

$$A_{w(B)} = 0.00326 \quad [\text{cm}^2]$$

Step No. 25 Calculate the skin depth, y. The skin depth will be the radius of the wire.

$$\gamma = \frac{6.62}{\sqrt{f}} \quad [\text{cm}]$$

$$\gamma = \frac{6.62}{\sqrt{50\text{x}10^3}} \quad [\text{cm}]$$

$$\gamma = 0.0296 \quad [\text{cm}]$$

See Engineering Design Note No. 1.

Step No. 26 Calculate the wire area.

$$wire_A = \pi(\gamma)^2 \quad [\text{cm}^2]$$

$$wire_A = (3.14)(0.0296)^2 \quad [\text{cm}^2]$$

$$wire_A = 0.00275 \quad [\text{cm}^2]$$

Step No. 27 Select a wire size with the required area from the wire Table 9.1. If the area is not within 10% of the required area, then go to the next smallest size.

A WG =# 23

$A_{w(B)} = 0.00259 \quad [\text{cm}^2]$

$\mu\Omega / cm = 666$

AU, = 0.00314 $[\text{cm}^2]$ with insulation

Step No. 28 Calculate the required number of primary strands, % and the new $\mu\Omega/cm$.

$$S_n = \frac{A_{w(B)}}{wire_A}$$

$$S_n = \frac{(0.00326)}{(0.00259)}$$

$$S_n = 1.26$$

See Engineering Design Note No. 3.

Step No. 29 Select a wire size with the required area from the wire Table 9.1. If the area is not within 10% of the required area, then go to the next smallest size.

$$AWG = \#22$$

$$A_{w(B)} = 0.00324 \ [cm^2]$$

$$\mu\Omega / cm = 531$$

Step No. 30 Calculate the winding resistance, R.

$$R = MLT(N)\left(\frac{\mu\Omega}{cm}\right) x10^{-6} \ [ohms]$$

$$R = 4.34(42)(531)x10^{-6} \ [ohms]$$

$$R = 0.0968 \ [ohms]$$

Step No. 31 Calculate the copper loss, P_{cu}.

$$P_{cu} = I_{rms}^2 R \ [watts]$$

$$P_{cu} = (1.32)^2(.0968) \ [watts]$$

$$P_{cu} = 0.169 \ [watts]$$

Step No. 32 Calculate the regulation, α, for this design.

$$\alpha = \frac{P_{cu}}{P_o} x100 \ [\%]$$

$$a = \frac{(0.169)}{57} x100 \ [\%]$$

$$a = 0.296 \ [\%]$$

See Engineering Design Note No. 13.

Step No. 33 Calculate the **ac** flux density, Bat.

$$B_{ac} = \frac{(0.4z)NAIF(10^{A})}{l_g + \frac{MPL}{(\mu_r\ 1}} \text{ [tesla]}$$

$$B_{ac} = \frac{(1{,}256)(42)(0.460)(1.279)(10^{4})}{0.061 + \frac{3.74}{(2500)}} \text{ [tesla]}$$

$$B_{ac} = 0.0497 \text{ [tesla]}$$

Step No. 34 Calculate the watts per kilogram, WK, using the P material loss equation.

$$WK = 3.18\text{x}10^{-4}(f)^{(1.51)}\left(\frac{\Delta B_{ac}}{2}\right)^{(2\ 747)} \text{ [watts / kilogram]}$$

$$WK = 3.18\text{x}10^{-4}(50000)^{(1.51)}\left(\frac{0.0497}{2}\right)^{(2\ 747)} \text{ [watts /kilogram]}$$

$$WK = 0.154 \text{ [watts/kilogram] or [milliwatts /gram]}$$

Step No. 35 Calculate the core loss, Pf_e.

$$P_{fe} = \left(\frac{\text{milliwatts}}{\text{gram}}\right)W_{tfe}\text{x}10^{-3} \text{ [watts]}$$

$$P_{fe} = (0.154)(14)\text{x}10\text{-}3 \text{ [watts]}$$

$$P_{fe} = 0.00216 \text{ [watts]}$$

Step No. 36 Calculate the total loss, core P_{fe} and copper P_{cu}, in watts P_{Σ}.

$$P_{\Sigma} = P_{fe} + P_{cu} \text{ [watts]}$$

$$P_{\Sigma} = (0.00216) + (0.169) \text{ [watts]}$$

$$P_{\Sigma} = 0.171 \text{ [watts]}$$

Step No. 37 Calculate the watt density, λ.

$$\lambda = \frac{P_{\Sigma}}{A_t} \text{ [watts/ cm']}$$

$$\lambda = \frac{0.171}{17.4} \text{ [watts/ cm']}$$

$$A = 0.00984 \text{ [watts/cm']}$$

Step No. 38 Calculate the temperature rise in degrees C.

$$T_r = 450(\lambda)^{(0.826)} \text{ [degrees C]}$$
$$T_r = 450(0.00984)^{(0.826)} \text{ [degrees C]}$$
$$T_r = 9.89 \text{ [degrees C]}$$

Step No. 39 Calculate the window utilization, K_u for this design.

$$Ku = \frac{NA_{w(B)}}{W_a}$$
$$K_u = \frac{(42)(.00324)}{0.428}$$
$$KU = 0.318$$

Desire Summary

Core Part Number	PQ-42016
Magnetic Material	P Ferrite
Frequency	50kHz
Flux Density	0.22 T
Core Loss	0.00216 W
Permeability	2500
Millihenrys per 1K Turns	4585
Total Gap	24 mil
Window Utilization Ku	0.318
--. ------ — - — ---- — --------- L ----------	
Winding Number	1
– -- . -- — - — ------- — - — -- — ----------	
AWG	22
Strands	1
Total Turns	42
Resistance Ω	0.0968
Copper Loss	0.169 W

Step No. 1 Calculate the total period, T.

$$T = \frac{1}{f} \text{ [seconds]}$$

$$T = \frac{1}{50000} \text{ [seconds]}$$

$$T = 20 \text{ [}\mu\text{sec]}$$

Step No. 2 Calculate the maximum output power, P_o.

$$P_o = I_o(V_o + V_d) \text{ [watts]}$$

$$PO = 1.0(28 + 1.0) \text{ [watts]}$$

$$PO = 29 \text{ [watts]}$$

Step No. 3 Calculate the maximum input current, I_{max}.

$$I_{in(max)} = \frac{P_o}{V_{min}\eta} \text{ [amps]}$$

$$I_{in(max)} = \frac{29}{(12)(0.8)} \text{ [amps]}$$

$$I_{in(max)} = 3.02 \text{ [amps]}$$

Step No. 4 Calculate the transistor voltage drop, V_{vd}.

$$V_{vd} = I_{in(max)} R_Q \text{ [volts]}$$

$$V_{vd} = (3.02)(0.1) \text{ [volts]}$$

$$V_{vd} = 0.302 \text{ [volts]}$$

Step No. 5 Calculate the minimum duty ratio, D_{min}.

$$D_{min} = \frac{(V_o + v,)}{(V_{max} - V_{vd}) + (V. + V_d)}$$

$$D_{min} = \frac{(28 + 1.0)}{[(18 - 0.302) + (28 + 1.0)]}$$

$$D_{min} = 0.621$$

Step No. 6 Calculate the maximum duty ratio, D_{max}.

$$D_{max} = \left(\frac{(V_o + V_d)}{(V_{min} - V_{vd}) + (V_o + V_d)} \right)$$

$$D_{max} = \left(\frac{(28+1.0)}{(12 - 0.302) + (28 + 1.0)} \right)$$

$$D_{max} = 0.713$$

Step No. 7 Calculate the maximum load resistance, R_{max}, (minimum load condition),

$$R_{max} = \frac{(V_o + V_d)}{I_o} \text{ [ohms]}$$

$$R_{max} = \frac{(28 + 1)}{0.2} \text{ [ohms]}$$

$$R_{max} = 145 \text{ [ohms]}$$

Step No. 8 Calculate the minimum load resistance, R_{min}, (maximum load condition).

$$R_{min} = \frac{(V_o + V_d)}{I_o} \text{ [ohms]}$$

$$R_{min} = \frac{(28 + 1)}{1.0} \text{ [ohms]}$$

$$R_{min} = 29 \text{ [ohms]}$$

Step No. 9 Calculate the maximum required inductance, L.

$$L = \frac{R_{max} T (1 - D_{min})^2}{2} \text{ [henrys]}$$

$$L = \frac{(145)(20 \times 10^{-6})(1 - 0.621)^2}{2} \text{ [henrys]}$$

$$L = 208 \text{ [}\mu\text{h]}$$

Step No. 10 Calculate the delta current, ΔI.

$$\Delta I = \frac{D_{max} T (V_{min} - V_{vd})}{L} \text{ [amps]}$$

$$\Delta I = \frac{(0.713)(20 \times 10^{-6})(12 - 0.302)}{208 \times 10^{-6}} \text{ [amps]}$$

$$\Delta I = 0.802 \text{ [amps]}$$

Step No. 11 Calculate the maximum inductor current, I_{pk}.

$$I_{pk} = \frac{I_o}{(1 - D_{max})} + \left(\frac{\Delta I}{2}\right) \text{ [amps]}$$

$$I_{pk} = \frac{1.0}{(1 - 0.713)} + \left(\frac{0.802}{2}\right) \text{ [amps]}$$

$$I_{pk} = 3.88 \text{ [amps]}$$

Step No.12 Calculate the rms current, I_{rms}.

$$I_{rms} = \sqrt{\left((I_{pk})^2 - (I_{pk})(\Delta I) + \frac{(\Delta I)^2}{3}\right)(D_{max})} \text{ [amps]}$$

$$I_{rms} = \sqrt{\left((3.88)^2 - (3.88)(0.802) + \frac{(0.802)^2}{3}\right)(0.713)} \text{ [amps]}$$

$$I_{rms} = 2.94 \text{ [amps]}$$

See Engineering Design Note No. 16.

Step No. 13 Calculate the energy-handling capability in watt-seconds, w-s.

$$ENG = \frac{LI_{pk}^2}{2} \text{ [w-s]}$$

$$ENG = \frac{(208 \times 10^{A})(3.88)^2}{2} \text{ [w s]}$$

$$ENG = 0.00157 \text{ [W -S]}$$

Step No. 14 Calculate the electrical conditions, K_e.

$$K_e = 0.145 P_o B_m^2 \times 10^{-4}$$

$$K_e = (0.145)(29)(0.25)^2 \times 10^{-4}$$

$$K_e = 0.0000263$$

Step No. 15 Calculate the core geometry, Kg.

$$K_g = \frac{(ENERGY)^2}{K_e \alpha} \text{ [cm}^5\text{]}$$

$$K_g = \frac{(0.00157)^2}{(0.0000263)(1,0)} \text{ [cm}^5\text{]}$$

$$K_g = 0.0932 \text{ [cm}^5\text{]}$$

Step No. 16 Select from Table 6.3a Kool Mμ powder COre comparable in COre geometry K_g.

Core number	KM-77586
Manufacturer	Magnetics
Magnetic path length	MPL = 8.95 cm
Core weight	W_{tfe} = 25 grams
Copper weight	W_{tcu} = 60.7 grams
Mean length turn	MLT = 4.165 cm
Iron area	A_c .“0.4709 cm^2
Window Area	W_a = 4.102 cm^2
Area Product	A_p = 1.932 cm^4
Core geometry	Kg= 0.0874 cm^5
Surface area	A_t = 62.5 cm^2
Permeability	μ = 60
Millihenrys per 1000 turns	mh = 38

Step No. 17 Calculate the number of turns, N.

$$N = 1000\sqrt{\frac{L_{(new)}}{L_{(1000)}}} \quad \text{[turns]}$$

$$N = 1000\sqrt{\frac{.208}{38}} \quad \text{[turns]}$$

$$N = 74 \text{ [turns]}$$

Step No. 18 Calculate the current density, J, using a window utilization Ku = 0.4.

$$J = \frac{2(ENG)x10^4}{K_u B_m A_p} \quad \text{[amps / cm}^2\text{]}$$

$$J = \frac{2(0.00157)x104}{(0.4)(0.25)(1.932)} \quad \text{‘amps ‘ cm,]}$$

$$J = 163 \text{ [amps/ cm}^2\text{]}$$

Step No. 19 Calculate the required permeability, Δμ.

$$\Delta\mu = \frac{(B.)(MPL)x10^4}{0.4\pi(W_a)(J)(K_u)}$$

$$\Delta\mu = \frac{(0.25)(8.95)x10^4}{(1.256)(4,102)(163)(0.4)}$$

$$\Delta\mu = 66.6 \text{ use } 60 \text{ perm}$$

See Engineering Design Note No. 9.

Step No. 12 Calculate the peak flux density, B_m.

$$B_m = \frac{0.\ 4\pi(N)(I_{pk})(\mu_r)x10^{-4}}{MPL} \text{ [tesla]}$$

$$B_m = \frac{1.256\,(74)(3.88)(60)x10^{-4}}{(8.95)} \text{ [tesla]}$$

$$B_m = 0{,}242 \text{ [tesla]}$$

Step No. 13 Calculate the required bare wire area, $A_{W(B)}$.

$$A_{w(B)} = \frac{I_{rms}}{J} \text{ [cm']}$$

$$A_{w(B)} = \frac{2.94}{152} \text{ [cm']}$$

$$A_{w(B)} = 0.0193 \text{ [cm']}$$

Step No. 14 Select a wire size with the required area from the wire Table 9.1, If the area is not within 10% of the required area, then go to the next smallest size.

$$A\ WG = \#\ 14$$

$$A_{w(B)} = 0.0208 \text{ [cm}^2\text{]}$$

$$\mu\Omega / cm = 82.8$$

See Engineering Design Note No. 7 and 11.

Step No. 15 Select a equivalent wire size with the required area from the wire Table 9,1.

$$A\ WG = \#\ 20$$

$$A_{w(B)} = (4)(0.00519) \text{ [cm']}$$

$$A_{w(B)} = 0.02076 \text{ [cm']}$$

$$\mu\Omega / cm = \frac{332}{(\ 4\ )}$$

$$\mu\Omega / cm = 83$$

Step No. 16 Calculate the winding resistance, R.

$$R = MLT(N)\left(\frac{\mu\Omega}{cm}\right) x10^{-6} \text{ [ohms]}$$

$$R = 4.165(74)(83)x10^{-6} \text{ [ohms]}$$

$$R = 0.0256 \text{ [ohms]}$$

Step No. 17 Calculate the copper loss, P_{cu}.

$$P_{cu} = I_{rms}^2 R \text{ [watts]}$$
$$P_{cu} = (2.94)^2(.0256) \text{ [watts]}$$
$$P_{cu} = 0.221 \text{ [watts]}$$

Step No. 18 Calculate the magnetizing force in oersteds, H and check against Figure 6.10.

$$H = \frac{(0.4\pi)NI_{pk}}{MPL} \text{ [oersteds]}$$
$$H = \frac{(1.256)(74)(3.88)}{8.95} \text{ [oersteds]}$$
$$H = 40.3 \text{ [oersteds]}$$

See Engineering Design Note No. 8.

Step No. 19 Calculate the ac flux density in tesla, Bat.

$$B_{ac} = \frac{(0.4\pi)(N)\left(\frac{\Delta I}{2}\right)(\mu_r)\text{x}1\ 0^{-4}}{MPL} \text{ [tesla]}$$
$$B_{ac} = \frac{(1.256)(74\ )(0,401)(60)\text{x}10\text{-}4}{8.95} \text{ [tesla]}$$
$$B_{ac} = 0.0250 \text{ [tesla]}$$

Step No. 20 Calculate the regulation, a, for this design.

$$\alpha = \frac{P_{cu}}{P_o}\text{x}100 \text{ [\%]}$$
$$\alpha = \frac{(0.221\ )\text{X}100}{(2\ 9)} \text{ [\%]}$$
$$a = 0.76 \text{ [\%]}$$

Step No. 21 Calculate the watts per kilogram, WK, using KoolMμ power cores Figure 6.9.

$$WK = 7.36\text{x}10^{-4}(f)^{(1.468)}(B_{ac})^{(2\ 0,2)} \text{ [watts/ kilogram]}$$
$$WK = 7.36\text{x}10^{-4}(50000)^{(1.468)}\ (0.0250)^{(2.062)} \text{ [watts/ kilogram]}$$
$$WK = 2.89 \text{ [watts/ kilogram] or [milliwatts / gram]}$$

Step No. 22 Calculate the core loss, P_{fe}.

$$P_{fe} = \left(\frac{\text{milliwatts}}{\text{gram}}\right) W_{tfe} x10^{-3} \quad \text{[watts]}$$

$$P_{fe} = (2.89)(25)x10\text{-}3 \text{ [watts]}$$

$$P_{fe} = 0.0732 \text{ [watts]}$$

Step No. 24 Calculate the total loss, P_{Σ}, core Pf_e and copper P_{cu}.

$$P_{\Sigma} = P_{fe} + P_{cu} \text{ [watts]}$$

$$P_{\Sigma} = (0.0732) + (0.221) \text{ [watts]}$$

$$P_{\Sigma} = 0.294 \text{ [watts]}$$

Step No. 25 Calculate the watt density, λ.

$$A = \frac{P_{\Sigma}}{A_t} \text{ [watts /cm}^2\text{]}$$

$$\lambda = \frac{0.294}{62.5} \text{ [watts/cm}^2\text{]}$$

$$\lambda = 0.00471 \text{ [watts/ cm}^2\text{]}$$

Step No. 26 Calculate the temperature rise in degrees C.

$$T_r = 450(\lambda)^{(0.826)} \text{ [degrees C]}$$

$$T_r = 450(0.00471)^{(0.826)} \text{ [degrees C]}$$

$$T_r = 5.38 \text{ [degrees C]}$$

Step No. 27 Calculate the window utilization, Ku.

$$Ku = \frac{NS_n A_{w(B)}}{W_a}$$

$$K_u = \frac{(74)(4)(0.00519)}{(4.102)}$$

$$Ku = 0.374$$

Design Summary

Core Part Number	KM-77083
Magnetic Material	Kool Mμ
Frequency	50kHz
Flux Density	0.242 T
Core Loss	0.0732 W
Permeability	60
Millihenrys per 1K Turns	38
Window Utilization Ku	0.374
Winding Number	1
A WG	20
Strands	4
Total Turns	74
Resistance Ω	0.0256
Copper Loss	0.221 W

Engineering Notes

318
Buck-Boost Isolated Continuous Current Design using an MPP Powder Core

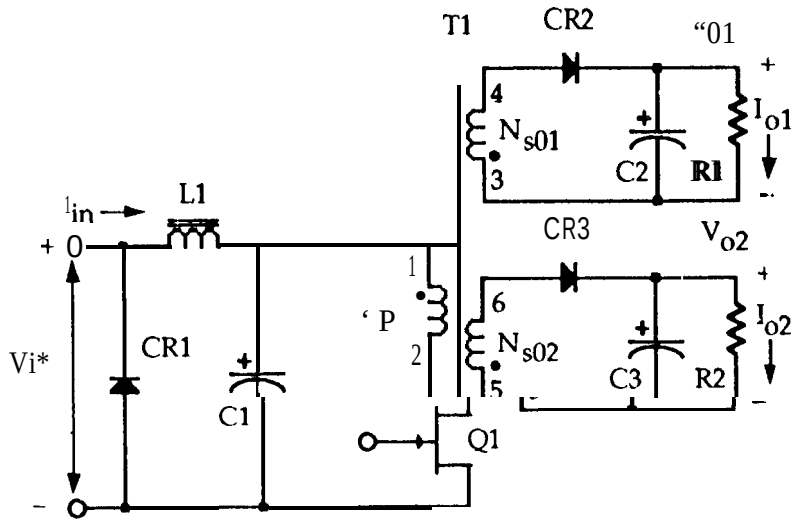

Figure 3.18 Buck-Boost isolated continuous current converter.

Buck-Boost Isolated Continuous Current Design Specification

1.	Input voltage max	V_{max} = 35 volts
2.	Input voltage nom	V_{nom} =28 volts
3.	input voltage min	V_{min} = 22 volts
4.	Output voltage	V.= 5 volts
5.	Output current	I_o= 1 amp
6.	Output current	$I_{o(min)}$ -.15 amps
7.	Output voltage bias	V_o = 12 volts
8.	Output current bias	I_o= 0.3 amps
9.	Output current bias	$I_{o(min)}$ = .05 amps
10.	Window utilization	K_u = 0.4
11.	Frequency	f=50kHz
12.	Converter efficiency	η = 80 %
13.	Maximum duty ratio	D_{max} = 0.45
14.	Regulation	a= 1.0 %
15.	Operating flux density	B_m = 0.25 tesla
16.	Diode voltage	V_d = 1.0 volt
17.	Transistor on resistance	R_Q = 0.40 ohms
18.	Temperature rise	T_r= < 50°C

This design procedure will work equally well with all of the various powder cores. Care must be taken regarding maximum flux density with different materials.

Step No. 1 Calculate the total period, T.

$$T = \frac{1}{f} \text{ [seconds]}$$

$$T = \frac{1}{50000} \text{ [seconds]}$$

$$T = 20 \text{ [}\mu\text{sec]}$$

Step No. 2 Calculate the maximum transistor on time, t_{on}.

$$t_{on} = TD_{max} \text{ [}\mu\text{sec.]}$$

$$t_{on} = (20x10+)(0.45) \text{ [}\mu\text{sec.]}$$

$$t_{on} = 9.0 \text{ [}\mu\text{sec.]}$$

Step No. 3 Calculate the minimum duty ratio, D_{min}.

$$D_{min} = \frac{V_{min}}{V_{max}} D_{max}$$

$$D_{min} = \frac{22}{35}(0.45)$$

$$D_{min} = 0.283$$

Step No. 4 Calculate the total secondary load power, P_{to}.

$$PO = I_o(V_o + V_d) \text{ [watts]}$$

$$P_{o1} = (1)(5+1) \text{ [watts]}$$

$$P_{o2} = (0.3)(12+1) \text{ [watts]}$$

$$P_{to} = P_{o1} + P_{o2} \text{ [watts]}$$

$$P_{to} = (6) + (3.9) \text{ [watts]}$$

$$P_{to} = 9.9 \text{ [watts]}$$

Step No. 5 Calculate the total secondary minimum load power, $P_{to(min)}$.

$$P_{o(min)} = I_{o(min)}(V_o \text{ -t- } V_d) \text{ [watts]}$$

$$P_{o1(min)} = (0.15)(5 + 1) \text{ [watts]}$$

$$P_{o2(min)} = (0.05)(12+1) \text{ [watts]}$$

$$P_{to(min)} = P_{o1} + P_{o2} \text{ [watts]}$$

$$P_{to(min)} = (0.9) + (0.65) \text{ [watts]}$$

$$P_{to(min)} = 1.55 \text{ [watts]}$$

Step No, 6 Calculate the maximum input current, $I_{in(max)}$.

$$I_{in(max)} = \frac{P_o}{V_{min}\eta} \text{ [amps]}$$

$$I_{in(max)} = \frac{9.9}{(22)(0.8)} \text{ [amps]}$$

$$I_{in(max)} = 0.563 \text{ [amps]}$$

Step No. 7 Calculate the minimum input power, Pin(min).

$$P_{in(min)} = \frac{P_o}{\eta} \text{ [watts]}$$

$$P_{in(min)} = \frac{1.55}{0.80} \text{ [watts]}$$

$$P_{in(min)} = 1.94 \text{ [watts]}$$

Step No. 8 Calculate the transistor voltage drop, V_{vd}.

$$V_{vd} = I_{in(max)} R_Q \text{ [volts]}$$

$$V_{vd} = 0.563(0.4) \text{ [volts]}$$

$$V_{vd} = 0.225 \text{ [volts]}$$

Step No. 9 Calculate the primary voltage, V_p.

$$V_p = V_{in} - V_{vd} \text{ [volts]}$$

$$V_p = 22 - 0.225 \text{ [volts]}$$

$$V_p = 21.78 \text{ [volts]}$$

Step No. 10 Calculate the required primary inductance, L.

$$L = \frac{((V_{in(max)} - V_{vd})D_{min})^2 T}{2P_{in(min)}} \text{ [henry]}$$

$$L = \frac{((35 - 0.225)0.283)^2 T}{2(1.94)} \text{ [henry]}$$

$$L = 499 \text{ [}\mu\text{h]}$$

Step No. 11 Calculate the primary delta current, ΔI_p.

$$\Delta I = \frac{D_{max} T V_{min}}{L} \quad \text{[amps]}$$

$$\Delta I = \frac{(0.45)(20\text{x}10^{-6})(21.78)}{499 \text{ X1 O-'}} \quad \text{[amps]}$$

$$\text{Al} = 0.393 \text{ [amps]}$$

Step No, 12 Calculate the primary peak current, I_{pk}.

$$I_{pk} = \frac{I_{in(max)}}{D_{max}} + \frac{\Delta I}{2} \text{ [amps]}$$

$$I_{pk} = \frac{0.563}{0.45} + \frac{0.393}{2} \quad \text{[amps]}$$

$$I_{pk} = 1.45 \text{ [amps]}$$

Step No, 13 Calculate the primary rms current, I_{rms}.

$$I_{rms} = \sqrt{\left((I_{pk})^2 - (I_{pk})(\Delta I) + \frac{(\Delta I)^2}{3}\right)(D_{max})} \quad \text{[amps]}$$

$$I_{rms} = \sqrt{\left((1.45)^2 - (1.45)(0.393) + \frac{(0.393)^2}{3}\right)(0.45)} \quad \text{[amps]}$$

$$I_{i\text{-}ins} = 0.844 \text{ [amps]}$$

Step No. 14 Calculate the energy-handling capability in watt-seconds, w-s.

$$ENG = \frac{LI_{pk}^2}{2} \quad \text{[w - s]}$$

$$ENG = \frac{(499\text{x}10^{-6})(1.45)^2}{2} \quad \text{[w s]}$$

$$ENG = 0.000525 \text{ [W -s]}$$

Step No. 15 Calculate the electrical conditions, K_e.

$$K_e = 0.145 P_{to} B_m^2 \text{x}10^{-4}$$

$$K_e = (\text{O. } 145)(9.9)(0.\ 25)^2 \text{x}10^{-4}$$

$$K_e = 0.00000897$$

Step No. 16 Calculate the core geometry, Kg.

$$Kg = \frac{(ENERGY)^2}{K_e \alpha} \quad [cm^5]$$

$$= \frac{(0.000525)^2}{(0.00000897)(1.0)} \quad [cm^5]$$

$$K_g = 0.0310 \quad [cm^5]$$

See Engineering Design Note No. 4.

Step No. 17 select from Table 6.1 an MPP powder core comparable in core geometry Kg.

Core number	MP-55350
Manufacturer	Magnetics Inc.
Magnetic path length	MPL = 5.88 cm
Core weight	Wtfe = 20 grams
Copper weight	W_{tcu} = 17.8 grams
Mean length turn	MLT = 331 cm
Iron area	A_c = 0,395 cm^2
Window Area	Wa = 1.515 cm^2
Area Product	A_p = 0.5991 cm4
Core geometry	Kg= 0.028639 cm^5
Surface area	A_t = 30.26 cm^2
Core Permeability	u = 125
Millihenry per 1000 turns	mh = 105

Step No. 18 Calculate the number of primary turns, N_p.

$$N = 1000\sqrt{\frac{L_{(new)}}{L_{(1000)}}} \quad [turns]$$

$$N = 1000\sqrt{\frac{.499}{105}} \quad [turns]$$

$$N = 69 \quad [turns]$$

Step No. 19 Calculate the current density J using a window utilization, Ku = 0.4.

$$J = \frac{2(ENG)X104}{B_m A_p K_u} \quad [amps/cm^2]$$

$$J = \frac{2(0.000525)x104}{(0.25)(0.599)(0,40)} \quad [amps/cm^2]$$

$$J = 175 \quad [amps/cm^2]$$

Step No, 20 Calculate the required incremental permeability, $\Delta\mu$.

$$\Delta\mu = \frac{(B_m)(MPL)\text{x}10^4}{0.4\pi(W_a)(J)(K_u)}$$

$$\Delta\mu = \frac{(.25)(5.88)\text{x}10^4}{(1.256)(1.515)(175)(0.4)}$$

$$\Delta\mu = 110 \text{ use } 125$$

See Engineering Design Note No. 8 and 18.

Step No. 21 Calculate the peak flux density B_m.

$$B_m = \frac{0.4\pi(N_p)(I_{ppk})(\Delta\mu)\text{x}10^{-4}}{MPL} \text{ [tesla]}$$

$$B_m = \frac{1{,}256(69)(1.45)(125)\text{x}10^{-4}}{(5.88)} \text{ [tesla]}$$

$$B_m = 0.267 \text{ [tesla]}$$

Step No. 22 Calculate the primary wire area, $A_{pw(B)}$.

$$A_{pw(B)} = \frac{I_{prms}}{J} \text{ [cm']}$$

$$A_{pw(B)} = \frac{0.844}{175} \text{ [cm']}$$

$$A_{pw(B)} = 0.00482 \text{ [cm']}$$

Step No, 23 Select a wire size with the required area from the wire Table 9.1. If the area is not within 10% of the required area, then go to the next smallest size.

$$A\ WG = \#20$$

$$A_{w(B)} = 0.00519 \text{ [cm']}$$

$$\mu\Omega / \text{cm} = 332$$

Step No. 24 Calculate the skin depth, y. The skin depth will be the radius of the wire.

$$\gamma = \frac{6.62}{\sqrt{f}} \text{ [cm]}$$

$$\gamma = \frac{6.62}{\sqrt{50\text{x}10^3}} \text{ [cm]}$$

$$y = 0{,}0296 \text{ [cm]}$$

See Engineering Design Note No. 1 and 3.

Step No. 25 Calculate the wire area.

$$wire_A = \pi(\gamma)^2 \quad [cm^2]$$
$$wire_A = (3.14)(0.0296)^2 [cm^2]$$
$$wire_A = 0.00275 \quad [cm^2]$$

Step No, 26 Select a wire size with the required area from the wire Table 9.1, If the area is not within 10% of the required area, then go to the next smallest size,

$$A\ WG = \#\ 23$$
$$A_{w(B)} = 0.00259 \quad [cm^2]$$
$$\mu\Omega / cm = 666$$
$$A_{w(1)} = 0.00314 \quad [cm^2] \text{ with insulation}$$

Step No. 27 Calculate the required number of primary strands, S_{np}, and the new $\mu\Omega/cm$.

$$S_{np} = \frac{A_{wp}}{wire_A}$$
$$S_{np} = \frac{(0.00482)}{(0.00259)}$$
$$S_{np} = 1.87 \text{ use } 2$$
$$(new)\mu\Omega / cm = \frac{\mu\Omega / cm}{S_{np}}$$
$$(new)\mu\Omega / cm = \frac{666}{2} = 333$$

Step No. 28 Calculate the primary winding resistance, R_p.

$$R_p = MLT(N_p)\left(\frac{\mu\Omega}{cm}\right) x10^{-6} \text{ [ohms]}$$
$$R_p = (3.31)(69)(333) x10^{-6} \text{ [ohms]}$$
$$R_p = 0.0761 \text{ [ohms]}$$

Step No. 29 Calculate the primary copper loss, P_p.

$$P_p = I^2_{p(rms)} R_p \text{ [watts]}$$
$$P_p = (0.844)^2(.0761) \text{ [watts]}$$
$$P_p = 0.0542 \text{ [watts]}$$

Step No. 30 Calculate the secondary turns, N_s

$$N_s = \frac{N_p(V_o + V_d)(1 - D_{max})}{(V_p D_{max})} \text{ [turns]}$$

$$N_{s01} = \frac{69(5 + 1)(0.55)}{(21.78)(0.45)} = 3 \text{ [turns]}$$

$$N_{s02} = \frac{69(12 + 1)(0.55)}{(21.78)(0.45)} = 50 \text{ [turns]}$$

Step No. 31 Calculate the secondary inductance, L_s.

$$L_s = N_s^2 \text{ (LMT)x}10^{-9} \text{ [henrys]}$$

$$L_{s01} = (23)^2(105)\text{x}10\text{-}9 = 55.5\text{x}10^{-6} \text{ [henrys]}$$

$$L_{s02} = (50)^2(105)\text{x}10\text{-}9 = 263\text{x}10^{-6} \text{ [henrys]}$$

Step No. 32 Calculate the secondary delta current, ΔI.

$$\Delta I_s = \frac{(V_o + V_d)(T)(D_{min})}{L_s} \text{ [amps]}$$

$$\Delta I_{sol} = \frac{(5+1.0)(20\text{X}104)(0.283)}{55.5\text{X}10^4} = 0.612 \text{ [amps]}$$

$$\Delta I_{s02} = \frac{(12 + 1.0)(20\text{X}104)(0.283)}{263\text{x}10^{-6}} = 0.280 \text{ [amps]}$$

Step No. 33 Calculate the secondary peak current, I_{pk}.

$$I_{pk} = \frac{P_o}{(V_o + V_d)(1 - D_{max})} + \frac{\Delta I}{2} \text{ [amps]}$$

$$I_{pk01} = \frac{6.0}{6.0(1 - 0.45)} + \frac{0.612}{2} = 2.12 \text{ [amps]}$$

$$I_{pk02} = \frac{3.9}{13(1 - 0.45)} + \frac{0.280}{2} = 0.685 \text{ [amps]}$$

Step No. 34 Calculate the secondary rms current, I_{srms}.

$$I_{rms} = \sqrt{\left(\left(I_{pk}\right)^2 - \left(I_{pk}\right)(\Delta I) + \frac{(\Delta I)^2}{3}\right)(1 - D_{min})} \quad \text{[amps]}$$

$$I_{rms01} = \sqrt{\left((2.12)^2 - (2.12)(0.612) + \frac{(0.612)^2}{3}\right)(0.717)} = 1.54 \text{ [amps]}$$

$$I_{rms02} = \sqrt{\left((0.685)^2 - (0.685)(0.280) + \frac{(0.280)^2}{3}\right)(0.717)} = 0.467 \text{ [amps]}$$

Step No. 34 Calculate the secondary wire area, $A_{sw(B)}$.

$$A_{sw(B)} = \frac{I_{srms}}{J} \quad \text{[cm}^2\text{]}$$

$$A_{pw01} = \frac{1.54}{175} = 0.00880 \quad \text{[cm}^2\text{]}$$

$$A_{pw02} = \frac{0.467}{173} = 0.00267 \quad \text{[cm}^2\text{]}$$

Step No. 35 Select a wire size with the required area from the wire Table 9.1. If the area is not within 10% of the required area, then go to the next smallest size.

$$AWG = \#18$$

$$A_{sw01} = 0.00823 \text{ [cm}^2\text{]}$$

$$\mu\Omega / cm = 209$$

$$AWG = \#23$$

$$A_{sw02} = 0.00259 \text{ [cm}^2\text{]}$$

$$\mu\Omega / cm = 666$$

Step No. 36 Calculate the number of secondary strands, S_{ns01}, and the $\mu\Omega/cm$.

$$S_{ns01} = \frac{A_{ws01}}{wire_A}$$

$$S_{ns01} = \frac{(0.00880)}{(0.00259)}$$

$$S_{ns01} = 3.397 \quad \text{use } 3$$

$$(new)\mu\Omega / cm = \frac{\mu\Omega / cm}{S_{ns01}}$$

$$(new)\mu\Omega / cm = \frac{666}{3} = 222$$

Step No. 37 Calculate the winding resistance, R_{s01}.

$$R_{sol} = MLT(N_{s01})\left(\frac{\mu\Omega}{cm}\right) \times 10^{-6} \text{ [ohms]}$$

$$R_{sol} = 3.31(23)(222)\times 10^{+} \text{ [ohms]}$$

$$R_{s01} = 0.0169 \text{ [ohms]}$$

Step No. 38 Calculate the secondary copper loss, P_{s01}.

$$P_{s01} = I_{s01}^2 R_{s01} \text{ [watts]}$$

$$P_{s01} = (1,54)^2(.0169) \text{ [watts]}$$

$$P_{s01} = 0.0401 \text{ [watts]}$$

Step No. 39 Calculate the number of secondary strands, S_{ns02}, and the $\mu\Omega/cm$.

$$S_{ns02} = \frac{A_{ws02}}{wire_A}$$

$$S_{ns02} = \frac{(0.00267)}{(0.00259)}$$

$$S_{ns02} = 1$$

$$(new)\mu\Omega/cm = \frac{\mu\Omega/cm}{S_{ns02}}$$

$$(new)\mu\Omega/cm = \frac{666}{1} = 666$$

Step No. 40 Calculate the winding resistance, R_{s02}.

$$R_{s02} = MLT(N_{s02})\left(\frac{\mu\Omega}{cm}\right) \times 10^{-6} \text{ [ohms]}$$

$$R_{s02} = 3.31(50)(666)\times 10^{+} \text{ [ohms]}$$

$$R_{s02} = 0.110 \text{ [ohms]}$$

Step No. 41 Calculate the secondary copper loss, P_{s02}.

$$P_{s02} = I_{s02}^2 R_{s02} \text{ [watts]}$$

$$P_{s02} = (0.467)^2(.110) \text{ [watts]}$$

$$P_{s02} = 0.0240 \text{ [watts]}$$

Step No. 42 Calculate the window utilization, Ku.

$$[\text{turns}] = \left(N_p S_{np}\right) = (138)\,[\text{primary}]$$
$$[\text{turns}] = \left(N_{s01} S_{ns01}\right) = (69)\,[\text{secondary}]$$
$$[\text{turns}] = \left(N_{s02} S_{ns02}\right) = (50)\,[\text{secondary}]$$
$$N_t = 257 \text{ turns } \# 23$$
$$K_u = \frac{N_t A_w}{W_a}$$
$$K_u = \frac{(257)(0.00259)}{(1.515)}$$
$$Ku = 0.439$$

Step No. 43 Calculate the total copper loss, P_{cu}.

$$P_{cu} = P_p + P_{s01} + P_{s02} \quad [\text{watts}]$$
$$P_{cu} = (0.0542)+(0.0401)+(0.0240)\ [\text{watts}]$$
$$P_{cu} = 0.118 \quad [\text{watts}]$$

Step No. 44 Calculate the regulation, α, for this design.

$$\alpha = \frac{P_{cu}}{P_o} \text{ Xloo } [\%]$$
$$^{a} = \frac{(0.118)}{(9.9)} \text{ x100 } [\%]$$
$$a = 1.19 \ [\%]$$

Step No. 45 Calculate the magnetizing force in oersteds, H.

$$H = \frac{(0.4\pi) N_p I_{pk}}{MPL} \quad [\text{oersteds}]$$
$$H = \frac{(0.4\pi)(69)(1.45)}{5.88} \quad [\text{oersteds}]$$
$$H = 21.37 \ [\text{oersteds}]$$

Step No. 46 Calculate the, Bat, flux density tesla..

$$B_{ac} = \frac{0.4\pi(N)(\Delta I)\mu_r \text{x}10^{-4}}{MPL} \quad [\text{tesla}]$$
$$B_{ac} = \frac{(1.256)(69)(0.393)(125)\text{x}10^{A}}{5.88} \ [\text{tesla}]$$
$$B_{ac} = 0.0724 \ [\text{tesla}]$$

Step No, 47 Calculate the watts per kilogram, **WK**.

$$WK = 0.00391(f)^{(1.28)}\left(\frac{B_{ac}}{2}\right)^{(2.14)} \text{ [watts / kilogram]}$$

$$WK = 0.00391(50000)^{(1.28)}(0.0362)^{(2.14)} \text{ [watts/ kilogram]}$$

$$WK = 3.33 \text{ [watts/ kilogram] or [milliwatts / gram]}$$

Step No. 48 Calculate the core loss, P_{fe}.

$$P_{fe} = \left(\frac{\text{milliwatts}}{\text{gram}}\right) W_{tfe} x10^{-3} \text{ [watts]}$$

$$P_{fe} = (3,33)(20)x10\text{-}3 \text{ [watts]}$$

$$P_{fe} = 0.067 \text{ [watts]}$$

Step No. 49 Calculate the total loss, P_{Σ}, core Pf_e and copper P_{cu} in watts.

$$P_{\Sigma} = P_{fe} + P_{cu} \text{ [watts]}$$

$$P_{\Sigma} = (0.067)+(0.118) \text{ [watts]}$$

$$P_{\Sigma} = 0.185 \text{ [watts]}$$

Step No. 50 Calculate the watt density, λ.

$$\lambda = \frac{P_{\Sigma}}{A_t} \text{ [watts/ cm']}$$

$$\lambda = \frac{0.185}{30.3} \text{ [watts/ cm']}$$

$$\lambda = 0.0061 \text{ [watts/ cm}^2\text{]}$$

Step No. 51 Calculate the temperature rise in degrees C.

$$T_r = 450(\lambda)^{(0.826)} \text{ [degrees C]}$$

$$T_r = 450(0.0061)^{(0.826)} \text{ [degrees C]}$$

$$T_r = 6,66 \text{ [degrees C]}$$

Design Summary

Core Part Number	MP-55350
Magnetic Material	MPP
Frequency	50kHz
Flux Density	0.267 T
Core Loss	0.067 w
Permeability	125
Millihenrys per 1K Turns	105
Window Utilization Ku	0.256

Winding Number	1	2	3
AWG	23	23	23
Strands	2	3	1
Total Turns	69	23	50
Resistance Ω	0.0761	0.0169	0.110
Copper Loss	0.0542 w	0.0401 w	0.0240 W

Engineering Notes

Coupled Inductor Design using an MPP Powder Core

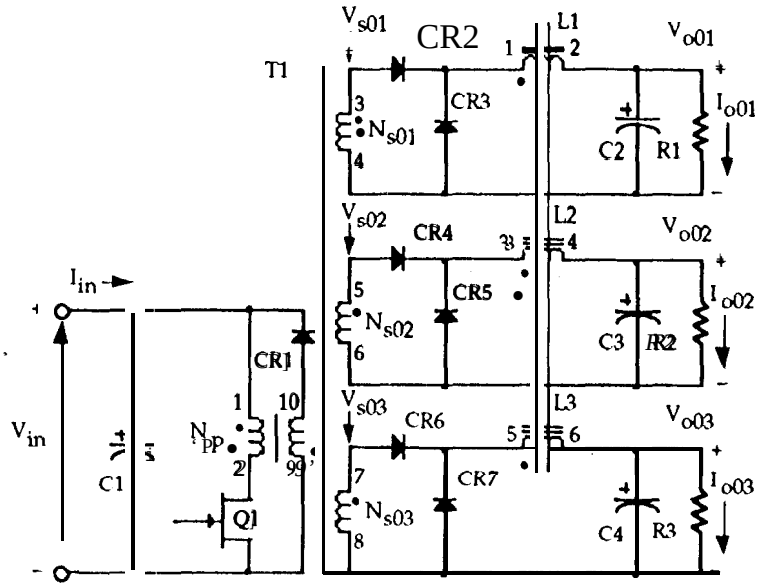

Figure 3.19 Single ended forward converter using a coupled inductor.

Coupled Inductor Design Specification

1.	Input line maximum	$V_{in(max)}$ = 35 volts
2.	Input line minimum	$V_{in(min)}$ = 22 volts
3.	Output voltage No. 1	V_{o01} = 5 volts
4.	Output current	$I_{o(max)}$ = 5 amps
5.	Output current	$I_{o(min)}$ = 0.5 amps
6.	Output voltage No. 2	V_{o02} = 15 volts
7.	Output current	$I_{o(max)}$ = 1 amps
8.	Output current	$I_{o(min)}$ = 0.2 amps
9.	Output voltage No. 3	V_{o03} = 28 volts
10.	Output current	$I_{o(max)}$ = 1 amps
11.	Output current	$I_{o(min)}$ = 0.1 amps
12.	Duty ratio	D_{max} = 0.45
13.	Regulation	α = 1 %
14.	Frequency	f=50kHz
15.	Operating flux density	B_m = 0.25 tesla
16.	Window utilization	Ku= 0.4
17.	Transformer turns per volt	N / V = 2.0
18.	Diode voltage drop	V_d = 1.0 volt
19.	The 5 volt output is the closed loop output.	

This design procedure will work equally well with all of the various powder cores. Care must be taken regarding maximum flux density with different materials.

Step No. 1 Calculate the total period, T.

$$\frac{1}{f} \text{ [seconds]}$$

$$T = \frac{1}{50000} \text{ [seconds]}$$

$$T = 20 \text{ [}\mu\text{sec]}$$

Step No. 2 Calculate the secondary voltage, V_s, required by the three outputs.

$$V_s = \frac{V_o + V_d}{D_{max}} \text{ [volts]}$$

$$V_{sol} = \left(\frac{15.0+1.0}{0.45}\right) = 13.3 \text{ use } 14 \text{ [volts]}$$

$$\text{Voltage factor} = \frac{13.3}{14} = 0.95$$

$$V_{s02} = \left(\frac{15.0+1.0}{0.45}\right)\left(\frac{1}{0.95}\right) = 37.4 \text{ use } 37 \text{ [volts]}$$

$$V_{s03} = \left(\frac{28.0+1.0}{0.45}\right)\left(\frac{1}{0.95}\right) = 67.8 \text{ use } 68 \text{ [volts]}$$

Step No. 3 Calculate the minimum duty ratio, D_{min}.

$$D_{min} = \left(\frac{V_o + V_d}{V_s}\right)\left(\frac{V_{min}}{V_{max}}\right)$$

$$D_{min} = \left(\frac{5+1.0}{14}\right)\left(\frac{22}{35}\right)$$

$$D_{min} = 0.269$$

Step No. 4 Calculate the transformer secondary turns, N_s

$$N_s = \left(\frac{N}{V}\right)V_o \text{ [turns]}$$

$$N_{s01} = (2)14 = 28 \text{ [turns]}$$

$$N_{s02} = (2)37 = 74 \text{ [turns]}$$

$$N_{s03} = (2)68 = 136 \text{ [turns]}$$

Step No, 5 Calculate the delta current, ΔI, using minimum currents.

$$\Delta I = 2\left(I_{01} + I_{02}\left(\frac{N_{02}}{N_{01}}\right) + I_{03}\left(\frac{N_{03}}{N_{01}}\right)\right) \text{ [amps]}$$

$$\Delta I = 2\left(0.5 + 0.2\left(\frac{74}{28}\right) + 0.1\left(\frac{136}{28}\right)\right) \text{ [amps]}$$

Al= *3.03* [amps]

Step No. 6 Calculate the required inductance, L.

$$L = \frac{(V. + V_d)(1 - D_{min})T}{\Delta I} \text{ [henry]}$$

$$L = \frac{(5.0 + 1.0)(1 - 0.269)(20x104)}{(3.03)} \text{ [henry]}$$

L = 28.95 use *29* [μh]

Step No. 7 Calculate the equivalent maximum current, I_{max}.

$$I_{max} = I_{01} + I_{02}\left(\frac{N_{02}}{N_{01}}\right) + I_{03}\left(\frac{N_{03}}{N_{01}}\right) \text{ [amps]}$$

$$I_{max} = 5.0 + 1.0\left(\frac{74}{28}\right) + 1.0\left(\frac{136}{28}\right) \text{ [amps]}$$

I_{max} = 12.5 [amps]

Step No. 8 Calculate the equivalent peak current, I_{pk}.

$$I_{pk} I_{o(max)} + \left(\frac{\Delta I}{2}\right) \text{ [amps]}$$

$$I_{pk} = (12.5) + \left(\frac{3.03}{2}\right) \text{ [amps]}$$

I_{pk} = 14.02 [amps]

Step No, 9 Calculate the energy-handling capability in watt-seconds, w-s.

$$ENG = \frac{LI_{pk}^2}{2} \text{ [w - s]}$$

$$ENG = \frac{(30x10^{A})(14.02)^2}{2} \text{ [w s]}$$

ENG = 0.00285 [W -S]

Step No. 10 Calculate the total output power, P_o.

$$P_o = (V_{o01}I_{o01}) + (V_{o02}I_{o02}) + (V_{o03}I_{o03}) \text{ [watts]}$$

$$PO = (5.0)(5.0)+(15)(1.0)+ (28)(1.0) \text{ [watts]}$$

$$PO = 68 \text{ [watts]}$$

Step No. 11 Calculate the electrical conditions, K_e.

$$K_e = 0.145 P_o B_m^2 x10^{-4}$$

$$K_e = (0.145)(68)(0.25)^2 x10^{-4}$$

$$K_e = 0.0000616$$

Step No. 12 Calculate the core geometry, K_g.

$$K_8 = \frac{(ENERGY)^2}{K_e \alpha} \quad [cm^5]$$

$$'g = \frac{(0.00285)^2}{(0.0000616)(1)} \quad 'cm,]$$

$$Kg = 0,132 \text{ [cm}^5\text{]}$$

Step No. 13 Select from Table 6.1 an MPP powder core comparable in core geometry K_g.

Core number	MP-55076
Manufacturer	Magnetics Inc.
Magnetic path length	MPL = 8.98 cm
Core weight	Wtf_e = 52 grams
Copper weight	Wtc_u = 60.4 grams
Mean length turn	MLT =454 cm
Iron area	A_c = 0.683 cm^2
Window Area	Wa = 3.74 cm^2
Area Product	A_p = 2.56 cm^4
Core geometry	Kg= 0.154 cm^5
Surface area	A_t = 66.2 cm^2
Core Permeability	mu=60
Millihenrys per 1000 turns	mh = 56

Step No. 14 Calculate the number of turns, N, for the 5 volt output.

$$N = 1000\sqrt{\frac{L_{(new)}}{L_{(1000)}}} \quad \text{[turns]}$$

$$N = 1000\sqrt{\frac{.029}{56}} \quad \text{[turns]}$$

$$N = 22.7 \text{ use } 23 \quad \text{[turns]}$$

Step No. 15 Calculate the current density, J, using a window utilization Ku = 0.4. Use the current from step 7.

$$J = \frac{NI}{W_a K_u} \quad \text{[amps/ cm}^2\text{]}$$

$$J = \frac{(23)(125)}{(3.74)(.4)} \quad \text{[amps /cm'']}$$

$$J = 192 \text{ [amps/ cm'']}$$

Step No. 16 Calculate the number of turns for the 15 volt and the 28 volt output.

$$N_{1.02} = \frac{N_{02} N_{L01}}{N_{01}} \quad \text{[turns]}$$

$$N_{1.02} = \frac{(74)(22)}{(28)} = 58.1 \text{ use } 58 \text{ [turns]}$$

$$N_{L03} = \frac{N_{03} N_{L01}}{N_{01}} \quad \text{[turns]}$$

$$N_{L03} = \frac{(136)(22)}{(28)} = 106.8 \text{ use } 107 \text{ [turns]}$$

See Engineering Design Note No. 17.

Using 22 turns instead of 23 turns on the inductor reduced the ratio error.

Step No. 17 Calculate the required permeability, $\Delta\mu$.

$$\Delta\mu = \frac{(B_m)(MPL)\text{x}10^4}{0.4\pi(W_a)(J)(K_u)}$$

$$\Delta\mu = \frac{(,25)(8.98)\text{x}10^4}{(1.256)(3.74)(192)(0.4)}$$

$$\Delta\mu = 62.2$$

See Engineering Design Note No. 18.

Step No. 23 Calculate the copper loss, P_{cu} for the 5 volt output.

$$P_{cu01} = I_{o1}^2 R_{01} \text{ [watts]}$$
$$P_{cu01} = (5.0)^2(0.00659) \text{ [watts]}$$
$$P_{cu01} = 0.165 \text{ [watts]}$$

Step Nc). 24 Calculate the required wire area, A_{w02}, A_{w03} for the 15 volt and 28 volt output.

$$A_{w02\&03} = \frac{I_{02}}{J} \text{ [cm']}$$
$$A_{w02\&03} = \frac{1.0}{192} \text{ [cm}^2\text{]}$$
$$A_{w02\&03} = 0.00521 \text{ [cm']}$$

Step No. 25 Select a wire size with the required area from the wire Table 9.1, If the area is not within 10% of the required area, then go to the next smallest size.

$$A\ WG = \#\ 20$$
$$A_{w(B)} = 0.00519 \text{ [cm']}$$
$$\mu\Omega / cm = 332$$

Step No. 26 Calculate the winding resistance, R_{02}, for the 15 volt output,

$$R_{02} = MLT(N_{02}\left(\frac{\mu\Omega}{cm}\right)x10^{-6} \text{ [ohms]}$$
$$R_{02} = 4.54(58)(332)x10^{4} \text{[ohms]}$$
$$R_{02} = 0.0874 \text{ [ohms]}$$

Step No. 27 Calculate the copper loss, P_{cu02}, *for the* 15 volt output.

$$P_{cu02} = I_{o2}^2 R_{02} \text{ [watts]}$$
$$P_{cu02} = (1.0)^2(0.0874) \text{ [watts]}$$
$$P_{cu02} = 0.0874 \text{ [watts]}$$

Step No. 28 Calculate the winding resistance, R_{03}, for the 28 volt output,

$$R_{03} = MLT(N_{03})\left(\frac{\mu\Omega}{cm}\right) x10^{-6} \text{ [ohms]}$$
$$R_{03} = 4.54(107)(332)x10+ \text{ [ohms]}$$
$$R_{03} = 0.161 \text{ [ohms]}$$

Step No. 29 Calculate the copper loss, P_{cu03}, for the 28 volt output.

$$P_{CU03} = I_{o3}^2 R_{03} \quad \text{[watts]}$$
$$P_{cu03} = (1.0)^2(0,161) \quad \text{[watts]}$$
$$P_{cu03} = 0.161 \quad \text{[watts]}$$

Step N0. 30 Calculate the total inductor copper loss, P_{tcu}.

$$P_{tcu} = P_{cu01} + P_{cu02} + P_{cu03} \quad \text{[watts]}$$
$$P_{tcu} = (0.165)+(0.0874)+(0.161) \quad \text{[watts]}$$
$$P_{tcu} = 0.413 \quad \text{[watts]}$$

Step No. 31 Calculate the regulation, a, for this design.

$$\alpha = \frac{P_{tcu}}{P_o} \text{x} 100 \quad [\%]$$
$$a = \frac{(0.41\ 3)}{(68)} \text{x}100 \, [\%]$$
$$a = 0.608 \quad [\%]$$

Step No. 32 Calculate the magnetizing force in oersteds, H.

$$H = \frac{(0.4\pi)N_{01}I_{pk01}}{MPL} \quad \text{[oersteds]}$$
$$H = \frac{(1,256)(22)(14.02)}{8.98} \quad \text{[oersteds]}$$
$$H = 43.1 \quad \text{[oersteds]}$$

See Engineering Design Note No. 8.

Step No. 33 Calculate the ac flux density in tesla, Bat.

$$B_{ac} = \frac{(0.4\pi)(N_{01})\left(\frac{\Delta I_{01}}{2}\right)(\mu)\text{x}10^{-4}}{MPL} \quad \text{[tesla]}$$
$$B_{ac} = \frac{(1.256)(22)\left(\frac{3.03}{2}\right)(60)\text{x}10^{-4}}{8.98} \quad \text{[tesla]}$$
$$B_{ac} = 0.0280 \quad \text{[tesla]}$$

Step No. 34 Calculate the watts per kilogram ,WK.

$$WK = 5.51x10^{-3}(f)^{(1.23)}(B_{ac})^{(2.12)} \text{ [watts / kilogram]}$$

$$WK=5,51x10\text{-}3\ (50000\ )^{(1,23)}(0.\ 0280)^{(2,12)} \text{[watts / kilogram]}$$

$$WK = 1.69 \text{ [watts/ kilogram] or [milliwatts /gram]}$$

Step No. 35 Calculate the core loss, Pf_e.

$$P_{fe} = \left(\frac{\text{milliwatts}}{\text{gram}}\right) W_{tfe} x10^{-3} \text{ [watts]}$$

$$P_{fe} = (1.69\ )(52)x10\text{-}3 \text{ [watts]}$$

$$P_{fe} = 0.0879 \text{ [watts]}$$

Step No. 36 Calculate the total loss, P_{Σ}, core P_{fe} and copper P_{cu} in watts.

$$P_{\Sigma} = P_{fe} + P_{cu} \text{ [watts]}$$

$$P_{\Sigma} = (0.0879) + (0.413) \text{ [watts]}$$

$$P_{\Sigma} = 0.501 \text{ [watts]}$$

Step No, 37 Calculate the watt density, λ.

$$\lambda = \frac{P_{\Sigma}}{A_t} \text{ [watts / cm}^2\text{]}$$

$$\lambda = \frac{0.501}{66.2} \text{ [watts/ cm}^2\text{]}$$

$$A = 0.00757 \text{ [watts/ cm}^2\text{]}$$

Step No. 38 Calculate the temperature rise in degrees C.

$$T_r = 450(\lambda)^{(0.826)} \text{ [degrees C]}$$

$$T_r = 450(0.0075)^{(0.62,)} \text{[degrees C]}$$

$$7, = 7,96 \text{ [degrees C]}$$

Step No. 39 Calculate the window utilization, Ku.

$$A_{wt} = S_n N A_{w(B)} \ [\text{cm}^2]$$

$$A_{wt01} = (4)(22)(0.00653) = 0.575 \ [\text{cm}'] \ , \ 5 \text{ volts}$$

$$A_{wt02} = (1)(58)(0.00519) = 0.301 \ [\text{cm}^2] \ , \ 15 \text{ volts}$$

$$A_{wt03} = (1)(107)(0.00519) = 0{,}555 \ [\text{cm}^2] \ , \ 28 \text{ volts}$$

$$A_{wt} = A_{wt01} + A_{wt02} + A_{wt03} \ [\text{cm}^2]$$

$$A_{wt} = (0{,}575) + (0.301) + (0.555) \ [\text{cm}^2]$$

$$A_{wt} = 1.43 \ [\text{cm}^2]$$

$$K_u = \frac{A_{wt}}{W_a} = \frac{1.43}{3.74} = 0.382$$

Desire Summary

Core Part Number	MP-55076
Magnetic Material	Molypermalloy Power
Frequency	50kHz
Flux Density	0.259 T
Core Loss	0.0879 W
Permeability	60
Millihenrys per 1K Turns	56
Window Utilization Ku	0.380

Winding Number	1	2	3
AWG	19	20	20
Strands	4	1	1
Total Turns	22	58	107
Resistance Ω	0.00659	0.0874	0.161
Copper Loss	0.165 w	0.0874 W	0.161 W

320
Single Ended Forward Output Inductor Design using a High Flux Toroid Core

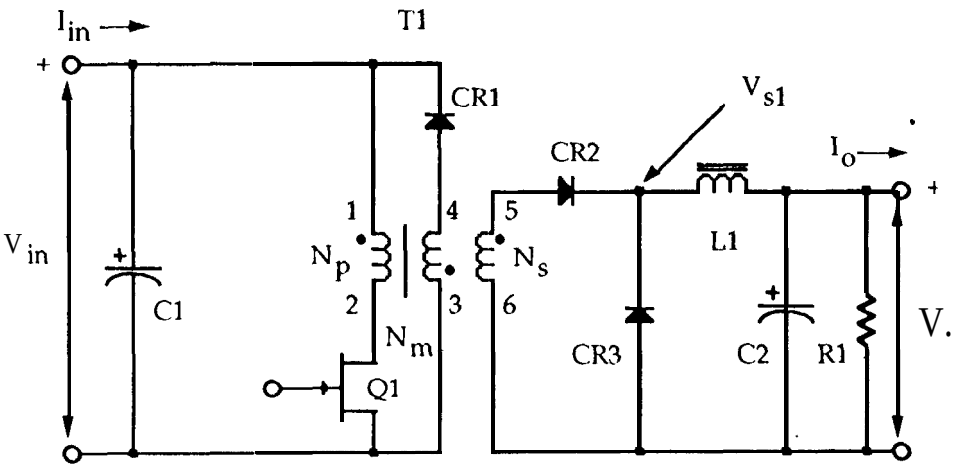

Figure 3.20 Single ended forward converter.

Single Forward Output Inductor Design specification

1. Frequency ..... f=50kHz
2. Output voltage ..... V_o = 10 volts
3. Output current ..... $I_{o(max)}$ = 3.5 amps
4. Output current ..... $I_{o(min)}$ = 0.5 amps
5. Delta current ..... Al = 0.5 amps
6. Input voltage max. ..... $V_{s1(max)}$ = 36 volts
7. Input voltage min. ..... $V_{s1(min)}$ = 24 volts
8. Regulation ..... α = 1.0940
9. Output power ..... P_o = 35 watts
10. Operating flux density ..... B_m = 0.3 tesla
11. Window utilization ..... Ku= 0,4
12. Diode voltage drop ..... V_d = 1.0 volt

This design procedure will work equally well with all of the various powder cores, Care must be taken regarding maximum flux density with different materials.

Step No. 1 Calculate the total period, T.

$$T = \frac{1}{f} \quad \text{[seconds]}$$

$$T = \frac{1}{50000} \quad \text{[seconds]}$$

$$T = 20 \ [\mu\text{sec}]$$

Step No. 2 Calculate the minimum duty ratio, D_{min}.

$$D_{min} = \frac{V_o}{V_{max}}$$

$$D_{min} = \frac{10}{36}$$

$$D_{min} = \mathbf{0.277}$$

Step No. 3 Calculate the required inductance, L.

$$L = \frac{T(V_o + V_d)(1 - D_{min})}{\Delta I} \quad \text{[henry]}$$

$$L = \frac{(20\text{x}10^{-6})(10 + 1.0)(1 - 0.277)}{0.5} \quad \text{[henry]}$$

$$L = 318 \ [\mu\text{h}]$$

Step No. 4 Calculate the peak current, I_{pk}.

$$I_{pk} = I_{o(max)} + \left(\frac{\Delta I}{2}\right) \quad \text{[amps]}$$

$$I_{pk} = (3.5) + \left(\frac{0.5}{2}\right) \quad \text{[amps]}$$

$$I_{pk} = 3.75 \ \text{[amps]}$$

Step No. 5 Calculate the energy-handling capability in watt-seconds, w-s.

$$ENG = \frac{LI_{pk}^2}{2} \quad [W\text{-}S]$$

$$ENG = \frac{(318\text{x}10^{-6})(3.75)^2}{2} \quad [W\text{-}S]$$

$$ENG = 0.00224 \ [W\text{-}s]$$

Step No. 6 Calculate the electrical conditions, K_e.

$$K_e = 0.145 P_o B_m^2 x10^{-4}$$
$$K_e = (0.145)\ (35)(\ 0.3)^2 x10^{A}$$
$$K_e = 0.0000457$$

Step No. 7 Calculate the core geometry, Kg.

$$K_8 = \frac{(ENERGY)^2}{K_e \alpha} \quad [cm^5]$$
$$= \frac{(0.00224)^2}{(0.0000457)(1.0)} \quad [cm^5]$$
$$K_g = 0.110 \quad [cm^5]$$

See Engineering Design Note No. 4.

Step No. 8 Select from Table 6.2a High Flux powder core comparable in core geometry Kg.

Core number	HF-58076
Manufacturer	Magnetics
Magnetic path length	MPL = 8.98 cm
Core weight	Wtf_e = 52.0 grams
Copper weight	Wt_{cu} = 60.5 grams
Mean length turn	MLT = 454 cm
Iron area	A_C = 0.683 cm^2
Window Area	W_a = 3.746 cm^2
Area Product	A_p = 2.56 cm^4
Core geometry	Kg= 0.154 cm^5
Surface area	At= 66,2 cm^2
Permeability	$\mu = 60$
Millihenrys per 1000 turns	rnh=56

Step No. 9 Calculate the number of turns, N.

$$N = 1000\sqrt{\frac{L_{(new)}}{L_{(1000)}}} \quad [turns]$$
$$N=1OOO\sqrt{\frac{.318}{56}} \quad [turns]$$
$$N = 75.4 \text{ use } 75 \quad [turns]$$

Step No. 10 Calculate the rms current, I_{rms}.

$$I_{rms} = \sqrt{I_{o(max)}^2 + \Delta I^2} \quad \text{[amps]}$$

$$I_{rms} = \sqrt{(3.5)^2 + (0.5)^2} \quad \text{[amps]}$$

$$I_{rms} = 3.54 \quad \text{[amps]}$$

Step No. 11 Calculate the current density, J, using a window utilization Ku = 0.4.

$$J = \frac{NI}{W_a K_u} \quad \text{[amps / cm']}$$

$$J = \frac{(75)(3.54)}{(3.75)(.4)} \quad \text{[amps/cm']}$$

$$J = 177 \quad \text{[amps/ cm}^2\text{]}$$

Step No. 12 Calculate the required permeability, $\Delta\mu$.

$$\Delta\mu = \frac{(B_m)(MPL)x10^4}{0.4\pi(W_a)(J)(K_u)}$$

$$\Delta\mu = \frac{(0.3)(8.98)x10^4}{(1.256)(3.75)(177)(0.4)}$$

$$\Delta\mu = 80.8 \text{ use } 60 \text{ perm}$$

See Engineering Design Note No. 9.

Step No. 13 Calculate the peak flux density, B_m.

$$B_m = \frac{0.4\pi(N)(I_{pk})(\mu_r)x10^{-4}}{MPL} \quad \text{[tesla]}$$

$$B_m = \frac{1.256(75)(3.75)(60)x104}{(8.98)} \quad \text{[tesla]}$$

$$B_m = 0.236 \quad \text{[tesla]}$$

Step No. 14 Calculate the required bare wire area, $A_{W(B)}$.

$$A_{w(B)} = \frac{I_{rms}}{J} \quad \text{[cm}^2\text{]}$$

$$A_{w(B)} = \frac{3.54}{177} \quad \text{[cm}^2\text{]}$$

$$A_{w(B)} = 0.02 \quad \text{[cm}^2\text{]}$$

Step No. 15 Select a wire size with the required area from the wire Table 9.1. If the area is not within 10?4. of the required area, then go to the next smallest size.

$$AWG = \#14$$
$$A_{w(B)} = 0.0208 \ [\mathrm{cm}^2]$$
$$\mu\Omega / cm = 82.8$$

See Engineering Design Note No. 7.

Step No. 16 Select a equivalent wire size with the required area from the wire Table 9.1

$$A\ WG = \#20$$
$$A_{w(B)} = (4)(0.00519) \quad [\mathrm{cm}']$$
$$A_{w(B)} = 0.02076 \ [\mathrm{cm}^2]$$
$$\mu\Omega / cm = \left(\frac{332.5}{4}\right)$$
$$\mu\Omega / cm = 83.07$$

Step No. 17 Calculate the winding resistance, R.

$$R = MLT(N)\left(\frac{\mu\mu\Omega}{cm}\right) x10^{-6} \ [\mathrm{ohms}]$$
$$R = 4.54\ (75)(83)x10\text{-}G \quad [\mathrm{ohms}]$$
$$R = 0.0283 \ [\mathrm{ohms}]$$

Step No. 18 Calculate the copper loss, P_{cu}.

$$Pm = I_{rms}^2 R \quad [\mathrm{watts}]$$
$$P_{cu} = (3.54)^2(.0283) \quad [\mathrm{watts}]$$
$$P_{cu} = 0.355 \ [\mathrm{watts}]$$

Step No, 19 Calculate the magnetizing force in oersteds, H.

$$H = \frac{(0.4\pi)NI_{pk}}{MPL} \quad [\mathrm{oersteds}]$$
$$H = \frac{(1{,}256)(75)(3.75)}{8.98} \quad [\mathrm{oersteds}]$$
$$H = 39.3 \ [\mathrm{oersteds}]$$

See Engineering Design Note No. 8.

Step No. 20 Calculate the **ac** flux density in **tesla**, Bat.

$$B_{ac} = \frac{(0.4\ \pi)(N)\left(\frac{\Delta I}{2}\right)(\mu_r)x10^{-4}}{MPL} \quad [\text{tesla}]$$

$$B_{ac} = \frac{(1.256)(75)(0.25)(60)x10^{-4}}{8.98} \quad [\text{tesla}]$$

$$B_{ac} = 0.0157 \quad [\text{tesla}]$$

Step No, 21 Calculate the regulation, a, for this design,

$$\alpha = \frac{P_{cu}}{P_o} x100 \ [\%]$$

$$\alpha = \frac{(0.355)}{(35)} x100 \ [\%]$$

$$a = 1.01 \ [\%]$$

Step No. 22 Calculate the watts per kilogram, WK, using High Flux power cores Figure 6.6.

$$WK = 1.26x10^{-2}(f)^{(1.46)}(B_{ac})^{(2.59)} \quad [\text{watts/ kilogram}]$$

$$WK = 1.26x1.0^{-2}(50000)^{(1.46)}(0.0157)^{(2.59)} \ [\text{watts/ kilogram}]$$

$$WK = 1.94 \ [\text{watts/ kilogram}] \text{ or } [\text{milliwatts/ gram}]$$

Step No, 23 Calculate the core 10SS, P_{fe}.

$$P_{fe} = \left(\frac{\text{milliwatts}}{\text{gram}}\right)W_{tfe}x10^{-3} \quad [\text{watts}]$$

$$P_{fe} = (1,94)(52)x10\text{-}3 \ [\text{watts}]$$

$$P_{fe} = 0.101 \ [\text{watts}]$$

Step No. 24 Calculate the total loss, P_{Σ}, core P_{fe} and copper P_{cu} in watts.

$$P_{\Sigma} = P_{fe} + P_{cu} \ [\text{watts}]$$

$$P_{\Sigma} = (0.101) + (0.355) \ [\text{watts}]$$

$$P_{\Sigma} = 0.456 \ [\text{watts}]$$

Step No, 25 Calculate the watt density, λ.

$$\lambda = \frac{P_{\Sigma}}{A} \text{ [watts / cm}^2\text{]}$$

$$\lambda = \frac{0.456}{66.2} \text{ [watts/ cm'']}$$

$$\lambda = 0.00689 \text{ [watts/ cm}^2\text{]}$$

Step No. 26 Calculate the temperature rise in degrees C.

$$T_r = 450(\lambda)^{(0.826)} \text{ [degrees C]}$$

$$7, = 450(0.00689)^{(0,82,)} \text{[degrees C]}$$

$$T_r = 7.37 \text{ [degrees C]}$$

Step No. 27 Calculate the window utilization, Ku.

$$K_u = \frac{NS_n A_{w(B)}}{W_a}$$

$$K_u = \frac{(75)(4)(0.00519)}{(3.75)}$$

$$K_u = 0.415$$

See Engineering Design Note No. 28.

Desire Summary

Core Part Number	HF-58076
Magnetic Material	High Flux Powder Core
Frequency	50kHz
Flux Density	0.236 T
Core Loss	0.101 w
Permeability	60
Millihenrys per 1K Turns	56
Window Utilization Ku	0.415
Winding Number	1
AWG	20
Strands	4
Total Turns	75
Resistance Ω	0.0283
Copper Loss	0.355 w

321
Push-Pull Output Inductor Design using a High Flux Powder Core

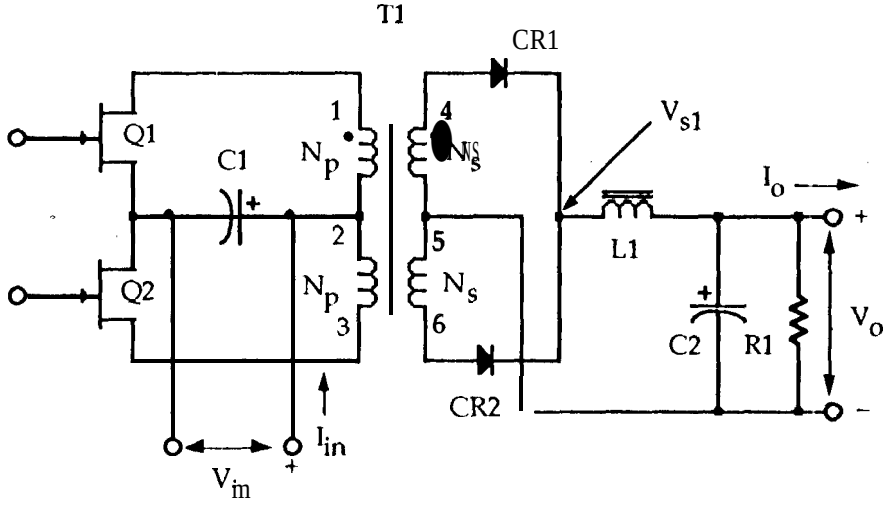

Figure 3.21 Push-Pull converter with a single output.

Push-Pull Output Inductor Design specification

1.	Frequency	f = 100 kHz
2.	Output voltage	V.= 10 volts
3.	Output current	$I_{o(max)}$ = 3.5 amps
4.	Output current	$I_{o(min)}$ = 0.5 amps
5.	Delta current	AI = 0.5 amps
6.	Input voltage max.	$V_{s1(max)}$ = 18 volts
7.	Input voltage min.	$V_{s1(min)}$ = 12 volts
8.	Regulation	α = 1.0 %
9.	Output power	P.= 35 watts
10.	Operating flux density	B_m = .3 tesla
11.	Window utilization	Ku= 0.4
12.	Diode voltage drop	V_d = 1.0 volt

This design procedure will work equally well with all of the various powder cores. Care must be taken regarding maximum flux density with different materials. "

Step No. 1 Calculate the total period, T.

$$T = \frac{1}{7} \quad \text{[seconds]}$$

$$T = \frac{1}{100000} \quad \text{[seconds]}$$

$$T = 10 \ [\mu\text{sec}]$$

Step No, 2 Calculate the minimum duty ratio, D_{min}.

$$D_{min} = \frac{V_o}{V_{max}}$$

$$D_{min} = \frac{10}{18}$$

$$D_{min} = 0.555$$

Step No. 3 Calculate the required inductance, L.

$$L = \frac{T(V_o + V_d)(1 - D_{min})}{\text{Al}} \ \text{[henry]}$$

$$L = \frac{(10)(10\text{X}10^4)(\text{H})(1 - 0.555)}{0.5} \ \text{[henry]}$$

$$L = 97.9 \text{ use } 98 \ [\mu\text{h}]$$

Step No. 4 Calculate the peak current, I_{pk}.

$$I_{pk} I_{o(max)} + \left(\frac{\Delta I}{2}\right) \quad \text{[amps]}$$

$$I_{pk} = (3.5) + \left(\frac{0.5}{2}\right) \quad \text{[amps]}$$

$$I_{pk} = \mathbf{3.75} \ \text{[amps]}$$

Step No. 5 Calculate the energy-handling capability in watt-seconds, w-s.

$$ENG = \frac{LI_{pk}^2}{2} \quad \text{[w - s]}$$

$$ENG = \frac{(98\text{x}10^{-6})(3.75)2}{2} \quad \text{[w s]}$$

$$ENG = \mathbf{0.000689} \ \text{[W -s]}$$

Step No. 6 Calculate the electrical conditions, K_e.

$$K_e = 0.145 P_o B_m^2 x10^{-4}$$
$$K_e = (0.145)(35)(0.3)^2 x10^{-4}$$
$$K_e = 0.0000457$$

Step No, 7 Calculate the core geometry, Kg.

$$K_g = \frac{(ENERGY)'}{K_e \alpha} \quad [cm^5]$$
$$= \frac{(0.000689)^2}{(0.0000522)(1.0)} \quad [cm^5]$$
$$K_g = 0.0104 \quad [cm^5]$$

Step No. 8 Select from Table 6.2a High Flux powder core comparable in core geometry K_g.

Core number	HF-58848
Manufacturer	Magnetics
Magnetic path length	MPL = 5.09 cm
Core weight	Wtfe = 10.0 grams
Copper weight	Wt_{cu} = 10.9 grams
Mean length turn	MLT = 2.64 cm
Iron area	A_c = 0.235 cm^2
Window Area	W_a = 1.167 cm^2
Area Product	A_p = 0.274 cm^4
Core geometry	K_g = 0.00973 cm^5
Surface area	At= 21.6$ cm^2
Permeability	μ = 60
Millihenrys per 1000 turns	mh = 32

Step No. 9 Calculate the number of turns, N.

$$N = 1000\sqrt{\frac{L_{(new)}}{L(1000)}} \quad [turns]$$
$$N = 1000\sqrt{\frac{.098}{32}} \quad [turns]$$
$$N = 55 \quad [turns]$$

Step No. 10 Calculate the rms current, I_{rms}.

$$I_{rms} = \sqrt{I_{o(max)}^2 + \Delta I^2} \text{ [amps]}$$

$$I_{rms} = \sqrt{(3.5)^2 + (0.5)^2} \text{ [amps]}$$

$$I_{rms} = 3.54 \text{ [amps]}$$

Step No. 11 Calculate the current density, J, using a window utilization Ku = 0.4.

$$J = \frac{NI}{W_a K_u} \text{ [amps / cm}^2\text{]}$$

$$J = \frac{(55)(3.54)}{(1.167)(.4)} \text{ [amps / cm}^2\text{]}$$

$$J = 417 \text{ [amp / cm}^2\text{]}$$

Step No. 12 Calculate the required permeability, $\Delta\mu$.

$$\Delta\mu = \frac{(B_m)(MPL)\text{x}10^4}{0.4\pi(W_a)(J)(K_u)}$$

$$\Delta\mu = \frac{(0.3)(5.09)\text{X}10^4}{(1.256)(1.167)(417)(0.4)}$$

$$\Delta\mu = 62{,}4 \text{ use 60 perm}$$

See Engineering Design Note No. 9.

Step No. 13 Calculate the peak flux density, B_m.

$$B_m = \frac{0.4\pi(N)(I_{pk})(\mu_r)\text{x}10^{-4}}{MPL} \text{ [tesla]}$$

$$B_m = \frac{1.256(55)(3.54)(60)\text{x}10^{-4}}{(5.09)} \text{ [tesla]}$$

$$B_m = 0.288 \text{ [tesla]}$$

Step No. 14 Calculate the required bare wire area, $A_{W(B)}$.

$$A_{w(B)} = \frac{I_{rms}}{J} \text{ [cm}^2\text{]}$$

$$A_{w(B)} = \frac{3.54}{417} \text{ [cm}^2\text{]}$$

$$A_{w(B)} = 0.00849 \text{ [cm}^2\text{]}$$

Step No. 15 Select a wire size with the required area from the wire Table 9.1. If the area is not within 10% of the required area, then go to the next smallest size.

$$AWG = \#\ 18$$
$$A_{w(B)} = 0.00823\ [\text{cm}^*]$$
$$\mu\Omega / cm = 209$$

See Engineering Design Note No. 7.

Step No. 16 Select a equivalent wire size with the required area from the wire Table 9.1.

$$AWG = \#\ 21$$
$$A_{w(B)} = (2.)(0.004116)\ [\text{cm}^*]$$
$$A_{w(B)} = 0.00823\ [\text{cm}^*]$$
$$\mu\Omega / cm = \left(\frac{419}{2}\right)$$
$$\mu\Omega / cm = 209$$

Step No. 17 Calculate the winding resistance, R.

$$R = MLT(N)\left(\frac{\mu\Omega}{cm}\right) x10^{-6} \quad [ohms]$$
$$R = 2.64(55)(209)x10< \quad [\text{ohms}]$$
$$R = 0.0303\ [ohms]$$

Step No. 18 Calculate the copper loss, I'_{cu}.

$$P_{cu} = I_{rms}^2 R \quad [\text{watts}]$$
$$P_{cu} = (3.54)^2(.0303) \quad [\text{watts}]$$
$$P_{cu} = 0.380\ [\text{watts}]$$

Step No. 19 Calculate the magnetizing force in oersteds, H.

$$H = \frac{(0.4\pi)NI_{pk}}{MPL} \quad [\text{oersteds}]$$
$$H = \frac{(1.256)(55)(307^5)}{5.09}\ [\text{oersteds}]$$
$$H = 50.9\ [\text{oersteds}]$$

See Engineering Design Note No. 8.

Step No, 20 Calculate the **ac** flux density in **tesla,** Bat.

$$B_{ac} = \frac{(0.4\ \pi)(N)\left(\frac{\Delta I}{2}\right)(\mu_r)x10^{-4}}{MPL} \quad [\text{tesla}]$$

$$B_{ac} = \frac{(1.256)(55)(0.25)(60)x10^{-4}}{5.09} \quad [\text{tesla}]$$

$$B_{ac} = 0.0204 \ [\text{tesla}]$$

Step No. 21 Calculate the regulation, *a,* for this design.

$$\alpha = \frac{P_{cu}}{P_o} \text{ Xloo } [\%]$$

$$\alpha = \frac{(0.380)}{(35)} \text{ x100 } [\%]$$

$$a = 1.09 \ [\%]$$

Step No. 22 Calculate the watts per kilogram, WK, using High Flux power cores Figure 6.6.

$$WK = 1.26x1\ 0^{-2}(f)^{(1.46)}(B_{ac})^{(2.59)} \ [\text{watts / kilogram}]$$

$$WK = 1.\ 26x1\ 0^{-2}(100000\ )^{(1.46)}(0.0204)^{(2.59)} \ [\text{watts/kilogram}]$$

$$WK = 10.5 \ [\text{watts/ kilogram}] \text{ or } [\text{milliwatts /gram}]$$

Step No. 23 Calculate the core loss, P_{fe}.

$$P_{fe} = \left(\frac{\text{milliwatts}}{\text{gram}}\right)W_{tfe}x10^{-3} \quad [\text{watts}]$$

$$P_{fe} = (10.5)(10\ )x10\text{-}3 \ [\text{watts}]$$

$$P_{fe} = 0.105 \ [\text{watts}]$$

Step No. 24 Calculate the total loss, P_{Σ}, core Pf_e and copper P_{cu}.

$$P_{\Sigma} = P_{fe} + P_{cu} \ [\text{watts}]$$

$$P_{\Sigma} = (0.105) + (0.380) \ [\text{watts}]$$

$$P_{\Sigma} = 0.485 \ [\text{watts}]$$

Step No. 25 Calculate the watt density, λ.

$$\lambda = \frac{P_{\Sigma}}{A_t} \quad \text{[watts /cm']}$$

$$\lambda = \frac{0.485}{21.7} \quad \text{[watts/ cm']}$$

A = 0.0223 [watts/ cm']

Step No, 26 Calculate the temperature rise in degrees C.

$$T_r = 450(\lambda)^{(0.826)} \quad \text{[degrees C]}$$

$$T_r = 450(0.0223)^{(0.826)} \quad \text{[degrees C]}$$

T_r = 19.4 [degrees C]

Step No. 27 Calculate the window utilization, Ku.

$$K_u = \frac{NS_n A_{w(B)}}{W_a}$$

$$K_u = \frac{(55)(2)(0.004116)}{(1.167)}$$

Ku = 0,388

Desire Summary

Core Part Number	HF-58848
Magnetic Material	High Flux Powder Core
Frequency	100kHz
Flux Density	0.288 T
Core Loss	0.105 w
Permeability	60
Millihenrys per 1K Turns	32
Window Utilization Ku	0.388
Winding Number	1
AWG	21
Strands	2
Total Turns	55
Resistance Ω	0.0303
Copper Loss	0.380 W

Step No. 1 Calculate the total period, T.

$$T = \frac{1}{f} \text{ [seconds]}$$

$$T = \frac{1}{50000} \text{ [seconds]}$$

$$T = 20 \text{ [}\mu\text{sec]}$$

Step No. 2 Calculate the maximum on time, t_{on}.

$$t = \frac{T}{2} = 10 \text{ [}\mu\text{sec]}$$

$$t_{on(max)} = t - t_{tw} \text{ [}\mu\text{sec]}$$

$$t_{on(max)} = 10 - 1 \text{ [}\mu\text{sec]}$$

$$t_{on(max)} = 9 \text{ [}\mu\text{sec]}$$

Step No. 3 Calculate the maximum on duty ratio, D_{max}.

$$D_{max} = \frac{t_{on(max)}}{T}$$

$$D_{max} = \frac{9.0}{20}$$

$$D_{max} = 0.45$$

Step No. 4 Calculate the maximum apparent secondary power, P_{ts}.

$$P_o = I_o V_o \sqrt{2} \text{ [watts] tapped winding}$$

$$P_{tso1} = (0.1)(10)(1.41) = 1.41 \text{ [watts]}$$

$$P_{tso2} = (0.1)(10)(1,41) = 1.41 \text{ [watts]}$$

$$P_{ts} = P_{tso1} + P_{tso2} \text{ [watts]}$$

$$P_{ts} = (1.41) + (1.41) = 2.82 \text{ [watts]}$$

Step No. 5 Calculate the apparent power, Pt.

$$P_t = P_o\left(\frac{1}{\eta} + 1\right) \text{ [watts]}$$

$$P_t = 2,82\left(\frac{1}{0.97} + 1\right) \text{ [watts]}$$

$$P_t = 5.73 \text{ [watts]}$$

Step No. 6 Calculate the electrical conditions, K_e.

$$K_e = 0.145(K_f)^2(f)^2(B_m)^2 x10^{-4}$$

$$K_e = (0.145)(4.0)^2(50000)^2(0.1)^2 x10^{-4}$$

$$K_e = 5800$$

Step No. 7 Calculate the core geometry, Kg.

$$K_g = \frac{P_t}{2K_e\alpha} \quad [cm']$$

$$K_g = \frac{(5.73)}{2(5800)(1)} \quad [cm^5]$$

$$K_g = 0.000494 \quad [cm^5]$$

See Engineering Design Note No. 4.

Step No. 8 Select from Table 4.14 a toroidal core comparable in core geometry Kg.

Core number	TC-41OO5
Manufacturer	Magnetics Inc.
Magnetic material	P, μ_i = 2500
Magnetic path length	MPL = 2.07 cm
Core weight	W_{tfe} = 1.20 grams
Copper weight	W_{tcu} = 0.96 grams
Mean length turn	MLT= 1.53 cm
Iron area	A_c = 0.107 cm^2
Window area	Wa = 0.177 cm^2
Area product	A_p = 0.0190 cm^4
Core geometry	Kg= 0.000531 cm^5
Surface area	At= 4.92 cm^2
Millihenrys per 1000 turns	mh = 1650

Step No. 9 Calculate the total secondary load power. P_{to}.

$$PO = 1_0 V_O [watts]$$

$$P_{o1} = (0.10)(10) \ [watts]$$

$$P_{o2} = (0.10)(10) \ [watts]$$

$$P_{to} = P_{o1} + PO, + P_{o3} \ [watts]$$

$$P_{to} = (1,0) + (1.0) \ [watts]$$

$$P_{to} = 2 \ [watts]$$

Step No. 10 Calculate the average primary current, I_{in}.

$$I_{in} = \frac{P_{to}}{V_p \eta} \text{ [amps]}$$

$$I_{in} = \frac{2}{(12)(0.97)} \text{ [amps]}$$

$$I_{in} = 0.172 \text{ [amps]}$$

Step No. 11 Calculate the primary voltage, VP.

$$V_p = (V_{in}) - 2(I_{in} R_s) \text{ [volts]}$$

$$V_p = (12) - 2(0.172)(5.0) \text{ [volts]}$$

$$V_p = 10.3 \text{ [volts]}$$

Step No. 12 Calculate the primary turns, N_p.

$$N_p = \frac{VJ,X104}{K_f B_m f A_c} \text{ [turns]}$$

$$N_p = \frac{(10.3)X10^4}{(4.0)(0.10)(50000)(0.107)} \text{ [turns]}$$

$$N_p = 48 \text{ [turns]}$$

See Engineering Design Note No. 2.

Step No. 13 Calculate the current density, J, using a window utilization $K_u = 0.32$.

$$J = \frac{P_t x10^4}{K_f K_u B_m f A_p} \text{ [amps / cm'']}$$

$$J = \frac{(5.73)X104}{(4.0)(0.32)(0.10)(50000)(0.019)} \text{ 'amps / cm,]}$$

$$J = 471 \text{ [amps/cm']}$$

Step No, 14 Calculate the primary rms current, $I_{p(rms)}$.

$$I_{p(rms)} = \frac{I_{in}}{\sqrt{2D_{max}}} \text{ [amps]}$$

$$I_{p(rms)} = \frac{0.172}{(0.949)} \text{ [amps]}$$

$$I_{p(rms)} = 0.181 \text{ [amps]}$$

No.

Step No. 15 Calculate the primary wire area, A_{wp}.

$$A_{wp} = + \ [cm']$$

$$A_{wp} = \frac{0.181}{471} \ [cm']$$

$$A_{wp} = 0.000384 \ [cm']$$

Step No. 16 Calculate the skin depth, y. The skin depth will be the radius of the wire.

$$\gamma \cdot \frac{6.62}{\sqrt{f}} \ [cm]$$

$$\gamma = \frac{6.62}{J50X10^3} \ [cm]$$

$$\gamma = 0.0296 \ [cm]$$

See Engineering Design Note No. 1.

Step No. 17 Calculate the wire area.

$$wire_A = \pi(\gamma)^2 \ [cm^2]$$

$$wire_A = (3.14)(0.0296)^2 [cm']$$

$$wire_A = 0.00275 \ [cm^2]$$

Step No. 18 Select a wire size with the required area from the wire Table 9.1. If the area is not within 10% of the required area, then go to the next smallest size.

$$A\ WG = \#23$$

$$A_{w(B)} = 0.00259 \ [cm']$$

$$\mu\Omega\ /cm = 666$$

$$A_{w(I)} = 0{,}00314 \ [cm^2] \text{ with insulation}$$

See Engineering Design Note No. 3.

Step No. 19 Select a wire size with the required area from the wire Table 9.1, If the area is not within 10% of the required area, then go to the next smallest size and record the resistance in $\mu\Omega/cm$.

$$A_{wp} = 0.000384 \ [cm']$$

$$AWG\ \#31$$

$$A_{w(B)} = 0.000401 \ [cm']$$

$$\mu\Omega / cm = 4295$$

See Engineering Design Note No. 3.

Step No. 20 Calculate the primary winding resistance, R_p.

$$R_p = MLT(N_p)\left(\frac{\mu\Omega}{cm}\right)x10^{-6} \text{ [ohms]}$$

$$R_p = 1.53\ (48)(4295)x10\text{-}6 \text{ [ohms]}$$

$$R_p = 0.316 \text{ [ohms]}$$

Step No. 21 Calculate the primary copper loss, I'_p.

$$P_p = I_p^2 R_p \text{ [watts]}$$

$$P_p = (0.181)^2(0.316) \text{ [watts]}$$

$$P_p = 0{,}0103 \text{ [watts]}$$

Step No. 22 Calculate the secondary turns, N_{s01}, each side of center tap.

$$N_{s01} = \frac{N_p(V_{01})}{V_p}\left(1+\frac{\alpha}{100}\right) \text{ [turns]}$$

$$N_{s01} = \frac{48(10)}{10.3}\left(1+\frac{1}{100}\right) \text{ [turns]}$$

$$N_{s01} = 47 \text{ [turns]}$$

See Engineering Design Note No. 2.

Step No. 23 Calculate the secondary wire area, A_{ws01}. Because of the center tap winding the current is multiplied the square root of the duty ratio, $\sqrt{D_{max}}$.

$$A_{ws01} = \frac{I_{s01}\sqrt{D_{max}}}{J} \text{ [cm}^2\text{]}$$

$$A_{ws01} = \frac{0.10(0.671)}{471} \text{ [cm}^2\text{]}$$

$$A_{ws01} = 0.000143 \text{ [cm}^2\text{]}$$

Step No. 24 Select a wire size with the required area from the wire 'Table 9.1. If the area is not within 100% of the required area, then go to the next smallest size.

$$AWG = \#35$$

$$A_{w(B)} = 0.000159 \text{ [cm}^2\text{]}$$

$$\mu\Omega / cm = 10850$$

See Engineering Design Note No. 3.

Step No. 25 Calculate the secondary winding resistance, R_{s01}.

$$R_{s01} = MLT(N_{s01})\left(\frac{\mu\Omega}{cm}\right)x10^{-6} \text{ [ohms]}$$

$$R_{s01} = 1.53(47)(10850)x10^{-6} \text{ [ohms]}$$

$$R_{s01} = 0.780 \text{ [ohms]}$$

Step No. 26 Calculate the secondary copper loss, P_{s01}

$$P_{s01} = \left(I_{s01}\sqrt{D_{max}}\right)^2 R \text{ [watts]}$$

$$P_{s01} = (0.10\ (0.671))^2(.780) \text{ [watts]}$$

$$P_{s01} = 0.00351 \text{ [watts]}$$

Step No. 27 Calculate the secondary turns, N_{s02}, each side of center tap.

$$N_{S02} = \frac{N_p(V_{02})}{V_p}\left(1+\frac{\alpha}{100}\right) \text{ [turns]}$$

$$N_{S02} = \frac{48(10)}{10.3}\left(1+\frac{1}{100}\right) \text{ [turns]}$$

$$N_{s02} = 47 \text{ [turns]}$$

See Engineering Design Note No. 2.

Step No. 28 Calculate the secondary wire area A_{ws02}. Using a center tap winding the current is multiplied the square root of duty ratio, $\sqrt{D_{max}}$.

$$A_{ws02} = \frac{I_{s02}\sqrt{D_{max}}}{J} \text{ [cm}^2\text{]}$$

$$A_{w02} = \frac{0.10(0.671)}{471} \text{ [cm}^2\text{]}$$

$$A_{ws02} = 0\$000143 \text{ [cm}^2\text{]}$$

See Engineering Design Note No. 3.

Step No. 29 Select a wire size with the required area from the wire Table 9.1. If the area is not within 10% of the required area, then go to the next smallest size and record the resistance in $\mu\Omega$/cm.

$$AWG = \#35$$

$$A_{w(B)} = 0.000159 \text{ [cm}^2\text{]}$$

$$\mu\Omega / cm = 10850$$

Step No. 30 Calculate the secondary winding resistance, R_{s02}.

$$R_{s02} = MLT(N_{s01})\left(\frac{\mu\Omega}{cm}\right) \times 10^{-6} \text{ [ohms]}$$

$$R_{s02} = 1.53(47)(10850)\times 10\text{-}6 \text{ [ohms]}$$

$$R_{s02} = 0.780 \text{ [ohms]}$$

Step No. 31 Calculate the secondary copper 10SS, P_{s02}.

$$P_{s02} = \left(I_{s02}\sqrt{D_{max}}\right)^2 R \text{ [watts]}$$

$$P_{s02} = (0.10(0.671))^2(.780) \text{ [watts]}$$

$$P_{s02} = 0.00351 \text{ [watts]}$$

Step No. 32 Calculate the total copper loss, P_{cu}.

$$P_{cu} = P_p + P_{s01} + P_{s02} \text{ [watts]}$$

$$P_{cu} = (0.0103)\text{-t}\ (0.00351)\text{-t}\ (0.00351) \text{ [watts]}$$

$$P_{cu} = 0.0173 \text{ [watts]}$$

Step No. 33 Calculate the regulation, α, for this design.

$$\alpha = \frac{P_{cu}}{P_o} \times 100 \text{ [\%]}$$

$$\alpha = \frac{(0.0173)}{(2)} \times 100 \text{ [\%]}$$

$$\alpha = 0.866 \text{ [\%]}$$

Step No. 34 Calculate the window utilization, K_u.

$$A_{wt} = NS_{ns}(A_w) \text{ [cm}^2\text{]}$$

$$A_{wtp} = (48)(1)(0.000401) = 0.0192 \text{ [cm}^2\text{]}$$

$$A_{wts1} = 2(47)(1)(0.000159) == 0.0149 \text{ [cm}^2\text{]}$$

$$A_{wts2} = 2(47)(1)(0{,}000159) = 0.0149 \text{ [cm}^2\text{]}$$

$$A_{wt} = (0.0192) + (0.0149) + (0.0149) \text{ [cm}^2\text{]}$$

$$K_u = \frac{000490}{0.177} = 0.277$$

Step No. 35 Calculate the flux density, B_m.

$$B_m = \frac{VPX104}{K_f f A_c N_p} \quad \text{[tesla]}$$

$$B_m = \frac{(10.3)X10^4}{(4.0)(50000)(0.107)(48)} \quad \text{[tesla]}$$

$$B_m = 0.100 \quad \text{[tesla]}$$

See Engineering Design Note No. 5.

Step No. 36 Calculate the watts per kilogram ,WK.

$$WK = 3.18x10^{-4}(f)^{(1.51)}(B_{ac})^{(2.747)} \quad \text{[watts/ kilogram]}$$

$$WK = 3.18x10^{-4}(50000)^{(1.51)}(0.100)^{(2.747)} \quad \text{[watts / kilogram]}$$

$$WK = 7.09 \quad \text{[watts/ kilogram] or [milliwatts/ gram]}$$

Step No. 37 Calculate the core loss, P_{fe}.

$$P_{fe} = \left(\frac{\text{milliwatts}}{\text{gram}}\right) W_{tfe} x10^{-3} \quad \text{[watts]}$$

$$P_{fe} = (7.09)(1.2)x10\text{-}3 \quad \text{[watts]}$$

$$P_{fe} = 0.00851 \quad \text{[watts]}$$

Step No. 38 Calculate the total loss, P_Σ, core P_{fe} and copper P_{cu} in watts.

$$P_\Sigma = P_{fe} + P_{cu} \quad \text{[watts]}$$

$$P_\Sigma = (0.00851) + (0.0173) \quad \text{[watts]}$$

$$P_\Sigma = 0{,}0258 \quad \text{[watts]}$$

Step No. 39 Calculate the watt density, λ.

$$\lambda = \frac{P_\Sigma}{A_t} \quad \text{[watts/ cm}^2\text{]}$$

$$\lambda = \frac{0.0258}{4\ 92} \quad \text{[watts / cm'}$$

$$\lambda = 0.00524 \quad \text{[watts/ cm}^2\text{]}$$

Step No. 40 Calculate the temperature rise in degrees C.

$$T_r = 450(\lambda)^{(0.826)} \text{ [degrees C]}$$

$$T_r = 450(0{,}00524)^{(0{,}82{,})} \text{ [degrees C]}$$

$$T_r = 5.88 \text{ [degrees C]}$$

Design Summary

Core Part Number	TC-41005
Magnetic Material	1' Ferrite
Frequency	50kHz
Flux Density	0.11'
Core Loss	0.00851 w
Permeability	2500
Millihenrys per 1K Turns	1650
Window Utilization K_u	0.277

Winding Number	1	2	3
AWG	31	35	35
Strands	1	1	1
Total Turns	48	94	94
Taps	None	Center	Center
Resistance Ω	0.316	0.780	0.780
Copper Loss	0.112 w	0.00351 w	0.00351 w

Engineering Notes

References

1. C. Mullett, "Design of High Frequency Saturable Reactors Output Regulators," High Frequency Power Conversion Conference Proceedings, 1886.
2. Pressman, A., Switching Power Supply Design, McGraw-Hill Inc. New York ,1991.
3. Sum, K., Switch Mode Power conversion-Basic Theory and Design, Marcel Dekker, 1988.
4. Unitrode Power Supply Design Seminar Handbook, Unitrode Corp., Watertown, Mass., 1988
5. C. Jamerson, "Calculation of Magnetic Amplifier Post Regulator Voltage Control Loop Parameters," High Frequency Power Conversion Conference Proceedings, 1887.
6. Unitrode Linear Integrated Circuits Data and applications Handbook, Merrimack, NH. 199(I
7. McLyman, C., Transformer and Inductor Design Handbook Rev. 1, Marcel Dekker, New York, 1978.
8. Magnetics Inc. Bulletin, New Magnetic Amplifier Cores and Material, Butler, I'A.
9. Allied Signal Technical Bulletin, Metglas Amorphous Alloy Cores, Parsippany, NJ.
10. Allied Signal Metglas Products Application Guide, Design of High Frequency Mag-Amp Regulators Using Metglas Amorphous Alloy 2714 A," Parsippany, NJ.
11, Allied Signal Metglas Products Application Guide, Design of High Frequency Output Inductors Using Metglas Amorphous Choke Cores," Parsippany, NJ.

Chapter 4

Ferrite Core Data

1. introduction to soft ferrites 284
2. Ferrite Material Cross Reference 285
3. Ferrite Core Manufacturers 286
4. Information about Core Data Tables 288
5. Ferrite Core Data Tables.
   - RM Core Data 289
   - PQ Core Data 290
   - RS Core Data 291
   - DS Core Data 292
   - EP Core Data 293
   - EC Core Data 294
   - ETD Core Data 295
   - EPC Core Data 296
   - PC Core Llama 297
   - EFD Core Data 298
   - EE & EI Lam Size Core Data 299
   - EE & EI Core Data a 300
   - Toroidal Core Data 302
   - EE & EI Planar Core Data 304
6. FerriteCoreLoss Curves.
   - Ferrite Material Type P 2500μ 305
   - Ferrite Material Type F 3000μ 306
   - Ferrite Material Type R 2300μ 307
   - Ferrite Material Type K 1500μ 308
   - Ferrite Material Type W 10000μ 309
7. Ferrite Material Characteristics 310
   - F Material B-H Loop 311
   - K Material B-H Loop 311
   - P & R Material B-H Loop 312
   - W Material B-H Loop 312
8. References 313

Introduction to Soft Ferrites

In the early days of the electrical industry, the need for the indispensable magnetic material was served by iron and- its magnetic alloys. However, with the advent of higher frequencies, the standard techniques of reducing eddy current losses, using laminations or iron powder cores, was no longer efficient or cost effective.

This realization stimulated a renewed interest in "magnetic insulators" as first reported by S, Hilpert in Germany in 1909. It was readily understood that if the high electrical resistivity of oxides could be combined with desired magnetic characteristic, a magnetic material would result that was particularly well suited for high frequency operation.

Research to develop such a material was being performed in various laboratories all over the world, such as by V. Kate, T. Takei, and N. Kawai in the 1930's in Japan and by J. Snoek of the Philips' Research Laboratories in the period 1935-45 in the Netherlands. By 1945 Snoek had laid down the basic fundamentals of the physics and technology of practical ferrite materials. In 1948, the Neel Theory of ferromagnetism provided the theoretical understanding of this type of magnetic material.

Ferrites are ceramic, homogeneous materials composed of oxides; iron oxide is their main constituent. Soft ferrites can be divided into two major categories, manganese-zinc ferrite and nickel-zinc ferrite. In each of these categories many different MnZn and NiZn material grades can be manufactured by changing the chemical composition or manufacturing technology. The two families of MnZn and NiZn ferrite materials complement each other and allow the use of soft ferrites from audio frequencies to several hundred megahertz.

Manganese-Zinc Ferrites

This type of soft ferrite is the most common, and is used in many more applications than the nickel-zinc ferrites. Within the Mn-Zn category, a large variety of materials is possible. Manganese-zinc ferrites are primarily used at frequencies less than 2 MHz,

Nickel-Zinc Ferrites

This class of soft ferrite is characterized by its high material resistivity, several orders of magnitude higher than MnZn ferrites. Because of its high resistivity, NiZn ferrite is the material of choice for operating from 1-2 MHz to several hundred megahertz.

Table 4.1 Ferrite Material Cross Reference

Ferrite Material Cross Reference Guide						
Permeability	1500	2300	2500	3000	5000	10000
Application	Power	Power	Power	Power	Filter	Filter
Manufacturer's	Material Designation					
Magnetics	[1] K	[2] R	[3] P	F	J	W
Thomson LCC		L2	B2	B1	A4	AZ
Philips Components	3F4	3F3	3C85	3C81	3E2A	3E5
Fair-Rite		78	77		75	76
Siemens	N 47	N 67		N 41	T 35	T 38
TDK Corp.	PC50	PC40	PC30		H5B	H5C2
Neosid			F-44	F-5	F-10	
Ceramic Magnetics	MN8CX	MN80	MN-60		MN60	MC25
Tokin		2500B2	2500B	31OOB	6000H	12001H
Ferrite International			TSF-05	TSF-10	TSF-15	

1. High frequency power material 250 kHz & up.
2. Lowest loss at 8O"-1OO"C, 25 kHz to 250 kHz.
3. Lowest loss at 60°-80°C.

Ferrite Core Manufacturers

Engineering Notes

Magnetics Inc.
900 East Butler Road
P. C). Box 391
Butler, Pennsylvania 16003
Phone (412) 282-8282
FAX (412) 282-6955

Rep. No. ___ ..___..—.

Ferrite International
15280 Wadsworth Road
Wadsworth, Illinois 60083
Phone (312) 249-4900
FAX (312) 249-4988

Rep. No _____

Ceramic Magnetics Inc.
16 Law Drive
Fairfield, New Jersey 07004
Phone (201) 227-4222
FAX (201) 227-6735

Rep. No._._.. _._.. __... _.____ . . ..._.._-- .

Fair-Rite Products Corp.
1 Commercial Row
Wsllkill, New York 12589
Phone (914) 895-2055
FAX (914) 895-2629

Rep. No._ _____ _____ ___

Philips Components
Materials Group
5083 Kings Highway
Saugerties, New York 12477
Phone (914) 246-2811
FAX (914) 246-0486

Rep. No.__ . ..____.._.. ____

TDK
M H& W International Corp.
14 Leighton Place
Mahwah. New Jersey 07430
Phone (201) 891-8800
Fax (201) 423-3716

Rep, No._____ ___

Ferrite Core Manufacturers (cent)

Engineering Notes

Thomson LCC
P.O. Box 1127
Vestal, New York 13851-1127
Phone (607) 729-2811
FAX (607) 729-9390

Rep. No_____

Siemens Components, Inc.
Ferrite Products
186 Wood Avenue South
Iselin, New Jersey 08830-9980
Phone (908) 906-4300
FAX (909) 632-2830

Rep. No_____

MMG/Neosid North America
126 Pennsylvania Ave.
Paterson, New Jersey 07724
Phone (201) 345-8900
FAX (201) 345-1172

Rep. No_____

Tokin American Inc.
155 Nicholson Lane
San Jose, California 95134
Phone (408)432-8020
FAX (408) 434-0375

Rep. No_____

Information about the Core Data Tables

[1] Part Number

The part number used is close approximation of the manufacturers part number.

[2] **MPL**

The MPL is the mean magnetic path length in centimeters.

[3] G Dimension

The G dimension is the overall core winding length for bobbin cores in centimeters.

[4] W_{tfe}

This is the total weight of the cm-e in grams.

[5] W_{tcu}

This is the total weight in grams of the copper using a window utilization K_u of 0.4.

[6] **MLT**

The MLT is the mean length turn in centimeters.

[7] A_c

This is the minimum cross section of the core in square centimeters.

[8] W_a

The is the total window area of the core in square centimeters.

[9] A_p

The area product A_p is the core area A_C times the window area W_a in centimeters 4th.

[10] Kg

The core geometry Kg is in centimeters 5th.

[11] At

This is the overall surface area A_t of the magnetic component in square centimeters.

[12] Perm

Perm is the permeability of the magnetic material such as (2500μ).

[13] A_L

A_L is the millihenrys per 1000 turns.

RM Ferrite Cores
Manufacturer **Magnetics** Inc.

Part No.	MPL Cm	G cm	'tfe grams	'tcu grams	MLT cm	A_c cm^2	W_a cm^2	A_p cm^4	'% cm^5	A_t cm^2	Penn	'L
RM-41110	2.06	0.700	1.60	1.02	2.02	0.108	0.142	0.0153	0.000327	5.88	2500	750
RM-4151O	2.14	0.630	3.00	1.50	2.53	0.210	0.167	0.0351	0.001160	8.01	2500	1409
RM-41812	2.17	0.798	5.40	2.65	3.11	0.380	0.239	0.0910	0.004440	11.40	2500	1950
KM-42316	3.80	1.074	13.00	6.73	4.17	0.640	0.454	0.2900	0.017820	20.20	2500	2200
KM-42819	4.40	1.240	23.00	11.81	5.20	0.980	0.639	0.6258	0.047180	29.60	2500	3300
RM-43723	5.69	1.680	42.00	22.21	6.10	1.400	1.025	1.4347	0.131820	44.50	2500	3750

Table 4.2 RM Core Data

PQ Ferrite Cores
Manufacturer Magnetics Inc.

Part No.	MPL cm	G cm	'tfe grams	W_{tcu} grams	MLT cm	A_c cm^2	W_a cm^2	A_p cm^4	K_g cm^5	A_t cm^2	Penn	AL
PQ-4261O	2.94	0.239	15.00	2.32	5.54	1.050	0.1177	0.1235	0.00937	19.75	2500	6310
PQ-42614	3.33	0.671	14.00	6.50	5.54	0.709	0.3304	0.2343	0.01200	21.35	2500	4585
PQ-42016	3.74	1.001	13.00	6.62	4.34	0.580	0.4283	0,2484	0.01327	17.37	2500	2930
PQ-42020	4.54	1.402	15.00	9.27	4.34	0.580	0.6001	0..3480	0.01859	20.21	2500	2410
PQ-43214	4.26	0.671	21.00	10.38	6.55	0.896	0.4454	0.3991	0.02183	27.60	2500	4450
PQ-42620	4.63	1.117	31.00	10.s4	5.54	1.090	0.5507	0.6003	0.04728	29.01	2500	4540
PQ-42625	5,55	1.580	36.00	15.32	5.54	1.090	0.7785	0.8486	0.06683	33.24	2500	3750
PQ-43220	5.55	1.118	42.00	17.30	6.55	1.370	0.7423	1.0170	0.08505	37.16	2500	5410
PQ-43230	7.46	2.098	55.00	32.47	6.55	1.370	1.3935	1.9091	0.15966	47.90	2503	3s10
PQ-43535	8.79	2.469	73.00	54.85	7.40	1.560	2.0851	3.2527	0.27440	61.96	2500	3930
PQ-44040	10.19	2.921	95.00	90.91	8.26	1.670	3.0939	5.1667	0.41760	78.41	2500	34s0

Table 4.3 PQ Core Data

RS Ferrite Cores
Manufacturer **Magnetics** Inc.

Part No.	MPL cm	G cm	'tie grams	'tcu grams	MLT cm	A_c cm^2	W_a cm^2	' P cm^4	K_g cm^5	A_t cm^2	Perm	' L
RS-41408	2.02	0.558	2.85	1.72	3.082	0.230	0.1565	0.03599	0.00107	6.75	2500	1435
RS-42311	2.65	0.726	11.65	5.03	4.848	0.580	0.2919	0.16927	0.00810	16.20	2500	3210
RS-42318	3.86	1.387	17.40	9.61	4.848	0.603	0.5576	0.33454	0.01656	21.17	2500	2500
RS-43019	4.56	1.303	30.95	17.34	6.522	1.230	0.7475	0.91942	0.06936	31.74	2500	4520

Table 4.4 RSCore Data

DS Ferrite Cores
Manufacturer Magnetics Inc.

Part No.	MPL cm	G cm	‘tfe grams	W_{tcu} grams	MLT cm	AC cm^2	W_a cm^2	A_p cm^4	K_g cm^5	A_t cm^2	Perm	‘ L
DS-42311	2.68	0.726	10.00	5.02	4.85	0.378	0.2915	0.1102	0.003437	16.16	2500	2810
DS-42318	3.99	1.386	13.00	9.59	4.85	0.407	0.5565	0.2265	0.007607	21.13	2500	2370
DS-42616	3.89	1.102	15.00	10.69	5.61	0.627	0.5361	0.3361	0.015023	23.10	2500	3120
DS-43019	4.62	1..300	22.00	17.32	6.52	0.960	0.7469	0.7170	0.042205	31.84	2500	3620
IX-43622	5.28	1.458	37.00	27.42	7.69	1.250	1.0024	1.2529	0.081452	44.17	2500	4370
DS-44229	7.17	2.042	78.00	57.53	8.85	1.780	1.8286	3.2549	0.261955	67.58	2500	5250

Table 4.5 DS Core Data

EP Ferrite Cores
Manufacturer **Magnetics** Inc.

Part No.	MPL cm	G cm	t_{ie} grams	t_{cu} grams	MLT cm	A_c cm^2	W_a cm^2	A_p cm^4	K_g	A_t cm^5	t_{em} cm^2		A_L
EP-40707	1.57	0.498	1.40	0.61	1.82	0.1030	0.0942	0.009703		0.0002193	3.47	2500	SS0
EP-41010	1.92	0.721	2.80	1.58	2.15	0.1130	0.2070	0.023396		0.0304927	5.69	2500	S50
EP-41313	2.42	0.899	5.10	2.00	2.40	0.1950	0.2341	0.045650		0.0014850	7.67	2500	1250
EP-41717	2.S5	1.118	11.60	3.32	2.93	0.3390	0.3222	0.109200		0.0051070	13.70	2500	1950
EP-42120	3.9s	1.397	27.80	7.24	4.10	0.7s00	0.496S	0.387500		0.0294S00	23.S4	2500	3450

Table 4.6 EP Core Data

EC Ferrite Cores
Manufacturer **Magnetics** Inc.

Part No.	MPL cm	G cm	W_{tie} grams	W_{tcu} grams	MLT cm	A_c cm^2	W_a cm^2	A_p cm	K_g cm^5	A_t cm^2	Perm	AL
EC-43517	7.59	2.382	36.00	35.30	6.29	0.709	1.578	1.1188	0.05046	50.27	2500	1800
EC-44119	8.76	2.697	52.00	55.40	7.47	1.060	2.082	2.2070	0.12516	67.64	2500	2400
EC-45224	10.30	3.099	111.00	97.80	9.05	1.410	3.040	4.2865	0.26719	106.48	2500	3150
EC-47035	14.10	4.465	253.00	258.40	11.57	2.110	6.278	13.2461	0.96586	201.84	2500	3600

Table 4.7 EC Core Data

ETD Ferrite Cores
Manufacturer **Magnetics** Inc.

Part No.	MPL cm	G cm	'tie grams	'tcu grams	MLT cm	AC cm^2	W_a cm^2	A_p cm^4	K_g cm^5	A_t cm^2	Perm	'L
ETD-43434	7.91	2.35	40.00	46.60	7.16	0.915	1.829	1.6735	0.08553	53.16	2500	1900
ETD-43939	9.27	2.85	60.00	74.70	8,37	1.230	2.508	3.0848	0.18131	69.49	25(XJ	2100
ETD-44444	10.40	3.23	94.00	100.20	9.43	1.720	2.988	5.1389	0.37483	87.29	2500	2600
ETD-44949	11.40	3.54	124.00	135.20	10.38	2.090	3.664	7.6575	0.616$5	107.16	2500	3000
ETD-47054	23.10	8.37	396.00	708.50	13.96	3.140	14.271	44.810	4.03117	311.66	2500	2650

Table 4.8 ETD Core Data

Table 4.9 EPC Core Data

EPC Ferrite Cores
Manufacturer TDK

Part No.	MPL cm	G cm	'tie grams	W_{tcu} grams	MLT cm	A_c cm^2	W_a cm^2	A_p cm^4	K_g cm^5	At cm^2	Perm	AL
EPC-10	1.78	0.530	1.10	0.47	1.900	0.0813	0.06S9	0.0056012	0.0000959	2.89	2300	870
EPC-13	3.06	0.900	2.10	2.04	2.600	0.1060	0.2205	0.0233730	0.0003811	5.91	2300	870
EPC-17	4.02	1.210	4.50	5.06	3.460	0.1990	0.4114	0.0818696	0.001ss34	10.14	2300	1150
EPC-19	4.61	1.450	5.30	7.15	3.700	0.1990	0.543s	0.1082063	0.0Q23279	12.03	2300	940
EPC-27N	5.59	1.700	10.00	9.66	4.600	0.2970	0.5908	0.1754527	0.0045313	19.45	2300	1400
EPC-25B	4.62	1.750	11.00	9.15	4.550	0.3240	0.5655	0.1 S32220	0.00521SS	17.61	2300	1560
EPC-25	5.92	1.800	13.00	14.44	4.930	0.464(!	0.8235	0.3821040	0.0143851	20.50	2300	1560
EPC-27	7.31	2.400	18.00	18.79	5.120	0.5460	1.0320	0.5634720	0.0240356	26.72	2300	1540
EPC-30	8.16	2.600	23.00	21.95	5.520	0.6100	1.11843	0.6819803	0.0301455	31.40	2300	1570

PC Ferrite Cores
Manufacturer Magnetics Inc.

Part No.	MPL an	G cm	W_{tfe} grams	W_{tcu} grams	MLT cm	A_c cm^2	W_a cm^2	A_p cm^4	K_g cm^5	A_t cm^2	Penn	AL
PC-40506	1.020	0.269	0.240	0.080	1.085	0.0410	0.0198	0.0008131	0.0000123	0.898	3000	650
PC-40507	0.775	0.218	0.200	0.100	1.257	0.0440	0.0219	0.000%43	0.0030135	1.096	3000	775
PC-40704	0.990	0.279	0.500	0.210	1.532	0.0700	0.0383	0.0026823	0.0000490	1.769	2500	675
PC-40905	1.250	0.361	1.000	0.450	1.947	0.1000	0.0650	0.0065045	0.0001335	2.822	2500	825
PC-41107	1.540	0.442	1.800	0.780	2.310	0.1630	0.0949	0.0154618	0.0034365	4.200	2500	1250
PC-41408	1.970	0.559	3.200	1.630	2.924	0.9240	0.1568	0.0390527	0.0013304	6.783	2500	1680
PC-41811	2.590	0.721	7.300	3.510	3.705	0.4290	0.2666	0.114.3684	0.0052966	11.052	2500	2500
PC-42213	3.120	0.919	13.000	6.190	4.447	0.6390	0.3912	0.2499721	0.0143675	16.438	2500	3300
PC-42616	3.760	1.102	20.000	10.090	5.292	0.9310	0.5362	0.4992012	0.0351261	23.105	2500	4250
PC-43019	4.500	1.300	34.000	16.470	6.206	2.3600	0.7465	1.0152774	0.0890013	31.832	2500	5450
PC-43622	5.290	1.458	57.000	26.390	7.382	2.0200	1.0054	2.0309561	0.2222977	44.193	2500	7100
PC-44229	6.850	2.042	104.000	55.470	8.351	2.6600	1.8284	4.8636716	0.6066382	67.571	2500	7500
PC-44529	6.720	1.880	149.600	48.420	9.141	3.6000	1.4895	5.3623635	0.8447747	73.087	2500	10500

Table 4.10 PC Core Data

EFD Ferrite Cores
Manufacturer Philips Components

Part No.	MPL cm	G cm	$'tfe$ grams	w_{tcu} grams	MLT cm	A_c cm^2	W_a cm^2	A_p cm^4	K_g cm^5	A_t cm^2	Perm	'L
EFD-10	2.37	0.75	0.90	0.75	1.82	0.0650	0.1163	0.097556	0.000108	3.31	1290	500
EFD-12	2.85	0.91	1.70	1.28	2.20	0.1070	0.1638	0.017527	0.030341	4.84	1370	700
EFD-15	3.40	1.10	2.80	2.99	2.68	0.1480.	0.3135	0.046398	0.001025	7.26	1800	700
EFD-20	4.70	1.54	7.00	6.76	3.80	0.3100	0.5005	0.155155	0.035063	13.36	1800	1150
EFD-25	5.69	1.86	16.03	11.54	4.78	0.5810	0.6789	(3.394441	0.019177	21.60	1800	1800
EFD-30	6.81	2.24	24.00	16.96	5.46	0.6900	0.8736	0.602784	0.030470	28.92	1800	1900

Table 4.11 EFD Core Data

Table 4.12 EE & EI Lam Size Core Data

EE&EI Lam. Size Ferrite Cores
Manufacturer **Magnetics** Inc.

Part No.	MPL cm	G cm	'tfe grams	'tcu grams	MLT cm	A_c cm^2	W_a cm^2	A_p cm^4	K_g cm^5	A_t cm^2	Penn	'L
EE-2829	2.77	0.793	1.30	2.22	2.623	0.1000	0.2385	0.02385	0.0003637	6.55	2500	480
EE-187	4.01	1.107	4.40	6.76	3.754	0.2280	0.5063	0.11544	0.0028047	14.39	2500	940
EE-2425	4.85	i .249	9.50	13.80	4.891	0.3840	0.7935	0.30472	0.0095695	23.32	2500	1440
EE-375	6.94	1.930	33.09	36.39	6.646	0.8210	1.5396	1,26402	0.0624579	45.39	2500	2180
EE-21	7.75	2.083	57.03	47.37	8.097	1.4900	1.6453	2.45147	0.1804407	60.92	2500	3180
EE-625	8.90	2.413	103.00	64.20	9.381	2.3600	1.9245	4.54185	0.4570386	81.88	2.500	4370
EE-75	10.70	2.896	179.00	110.88	11.157	3.3900	2.7948	9.47448	1.1514971	118.13	2500	6600

EE&EI Ferrite Cores
Manufacturer **Magnetics** Inc.

Part No.	MPL cm	G cm	'tie grams	'tcu grams	MLT cm	AC cm^2	W_a cm^2	A_p cm^4	K_g cm^5	A_t cm^2	Perm	AL
EE-40904	1.54	0.406	0.50	0.38	1.664	0.0360	0.064	0.002304	0.000020	2.92	2500	405
EE-41208	3.21	1.092	2.50	2.65	2.622	0.1150	0.284	0.032701	0.000574	8.56	2500	685
EE-41707	3.04	0.787	3.00	3.23	3.027	0.1260	0.300	0.037800	0.000629	10.61	2500	825
EE-41205	2.77	0.792	2.60	2.96	3.310	0.2000	0.252	(1.050322	0.001216	8.20	2500	1200
EE-41709	4.15	1.346	4.50	8.02	3.384	0.1810	0.666	0.120564	0.002579	15.97	2500	800
EE-4181O	4.01	1.118	8.50	9.33	4.801	0.4540	0.5465	0.248088	0.009384	18.10	2500	1875
EE-42515	7.35	2.515	15.00	28.38	4.958	0.3970	1.6095	0.638989	0.020467	34.77	2500	940
EE-43007	6.56	1.941	20.00	23.38	5.242	0.4910	1.2544	0.615928	0.023077	38.51	2500	1680
EE-45114	6.40	1.539	37.00	31.17	8.792	0.7810	0.9970	0.778630	0.027667	45.62	2500	2500
EE-42520	4.80	1.250	19.00	17.71	6.341	0.7680	0.7856	0.603349	0.029229	28.85	2500	2880
EE-4281O	4.77	1.087	23.00	13.47	6.005	0.8600	0.6310	0.542620	0.031085	30.59	250Q	3430
EE-43618	4.24	0.483	28.00	15.48	8.878	1.3500	0.4903	0.661934	0.040260	39.61	2500	5640
EE-43520	9.43	3.124	42.00	59.30	6.714	0.9050	2.4838	2.247840	0.121191	61.49	2500	1590
EE-44011	7.67	2.001	49.00	45.65	7.405	1.1403	1.7336	1.976630	0.121700	61.24	2500	3260
EE-43524	10.70	3.749	46.00	69.48	6.619	0.8310	2.9520	2.453107	0.123187	68.26	2500	1435
EE-45015	7.72	1.580	70.00	62.67	9.465	1.4200	1.8620	2.644016	0.158710	80.25	2500	3930

Table 4.13 EE & EI Core Data

EE&EI Ferrite Cores
Manufacturer **Magnetics** Inc.

Part No.	MPL cm	G cm	W_{tfe} grams	W_{tcu} grams	MLT cm	A_c cm^2	W_a cm^2	A_p cm^4	K_g cm^5	A_t cm^2	Perm	AL
EE-44020	9.s40	2.9S2	87.00	91.62	9.059	1.8.300	2.s441	5.204710	0.420571	S5.79	2500	3750
EE-45021	9.290	2.499	10S.00	S6.33	9.620	2.1300	2.5235	5.375009	0.476025	94.55	2500	5000
EE-44294	10.400	3.017	132.00	7S.S2	9.329	2.4400	2.3760	5.79742S	0.60653S	97.45	2500	43s0
EE-44022	9.s40	2.9S2	114.00	100.65	9.96S	2.3700	2.$395	6.729521	0.639999	93,52	2500	4510
EE-46016	11.000	2.75S	135.00	162.13	11.406	2.4000	3.9972	9.593214	0.807391	12S.72	2500	4680
EE-45528	12.300	3.70s	212.00	160.S7	11.436	3.4600	3.9561	13.688179	1.656632	1.3s.47	2500	5130
EE-45530	12.300	3.70S	255.00	172.09	12.233	4.1300	3.9561	16.33S7S0	2.206450	14?.24	2500	6130
EE-47228	13.700	3.556	264.00	2S9.02	13.532	3.6300	6.0064	21. S03376	2.33956S	190.70	2500	4S60
EE-48020	1s.500	5.639	357.00	5s6.11	14.754	3.S200	11.1716	42.675476	4.419761	276.22	2500	3s10

Table 4.13 EE & EI Core Data (cont.)

Toroidal Ferrite Cores
Manufacturer Magnetics Inc.

Part No.	MPL cm	'tie grams	W_{tcu} grams	MLT cm	AC cm^2	W_a cm^2	A_p cm^4	K_g cm	A_t cm^2	Perm	AL
TC40705	1.500	0.900	0.390	1.374	0.0980	0.0794	0.00778	0.0002218	3.227	2500	20SS
TC41OO3	2.070	0.820	0.800	1.271	0.0700	0.1771	0.01239	0.0002731	4.319	2500	1095
TC-41005	2.070	1.200	0.960	1.527	0.1070	0.1771	0.01895	0.0005311	4.919	2500	16.50
TC-41303	3.120	1.200	2.680	1.525	0.0720	0.4936	0.03554	0.0006713	S.053	2500	745
TC40907	2.270	1.600	1.660	1.900	0.1350	0.2453	0.03312	0.0009412	6.196	2500	1S84
TC-41506	3.060	1.900	2.560	1.6s9	0.1090	0.4264	0.04647	0.0011993	S.511	2500	1111
TC41407	2.950	1.900	2.530	1.781	0.1260	0.4002	0.05042	0.0014271	S.402	2500	1356
TC41305	3.120	1.900	3.210	1.829	0.1170	0.4936	0.05775	0.00147s0	9.044	2500	1190
TC-41206	2.460	3.300	1.510	2.032	0.2210	0.2090	0.04619	0.0020095	S.105	2500	2s20
TC-41306	3.120	2.400	3.570	2.032	0.1460	0.4936	0.07207	0.0020713	9.706	2500	14S5
TC-41406	2.950	2.700	2.890	2.032	0.1690	0.4002	0.06763	0.0022499	9.203	2500	1805
TC41605	3.6s0	3.300	4.440	2.014	0.1530	0.6204	0.09492	0.002S83S	12.212	2500	1375
TC42106	5.000	5.400	11.890	2.640	0.2310	1.2661	0.29247	0.0102366	21.656	2500	1500
TC42206	5.420	6.900	14.630	2.784	0.2500	1.4777	0.36941	0.0132693	25.041	2500	1510
TC-41809	4.140	9.900	8.280	3.120	0.4030	0.7462	0.30073	0.0155379	19.604	2500	3050
TC-42109	5.000	8.100	13.720	3.046	0.3260	1.2661	0.41275	0.0176679	23.774	2500	2100
TC42207	5.420	8.500	15.940	3.036	0.3150	1.476s	0.46519	0.0193077	26.461	2500	1S75
TC42507	6.170	11.600	22.110	3.300	0.3740	1.8845	0.704s0	0.0319514	33.390	2500	195S
TC-42212	5.420	13.500	19.950	3.799	0.5110	1.476s	0.75465	0.0405939	30.7S7	2500	3020
TC-42908	7.320	13.800	35.460	3.519	0.35S0	2.S336	1.01443	0.0412757	43.554	2500	15S5

Table 4.14 Toroidal Core Data

Toroidal Ferrite Cores
Manufacturer Magnetics Inc.

Part No.	MPL cm	'tie grams	W_{tcu} grams	MLT cm	AC cm^2	W_a cm^2	' P cm^4	K_g cm^5	A_t cm^2	Penn	AL
TC-43806	8.300	26.400	41.170	4.064	0.5700	2.8488	1.62381	0.0910994	59.592	2500	2200
TC-42915	7.320	27.600	47.950	4.759	0.7400	2.8336	2.09687	0.1304227	52.883	2500	3222
TC4361O	8.970	29.400	66.090	4.481	0.6280	4.1480	2.60491	0.1460431	67.059	2500	2726
TC-43615	8.970	44.000	77.840	5.277	0.9460	4.1480	3.92396	0.2813720	74.450	2500	3366
TC-43813	8.300	51.700	51.460	5.080	1.1500	2.8488	3.27610	0.2966549	69.112	2500	4185
TC-44416	8.870	80.800	61.750	6.096	1.8700	2.8488	5.32722	*0.6536689*	90.162	2500	5830
TC44920	12.300	74.600	182.530	6.466	1.1900	7.9386	9.44697	*0.6954658*	130.317	2500	3032
TC44916	12.700	75.300	206.600	6.466	1.1600	8.9856	10.42326	*0.7479932*	135.502	2500	2950
TC-44715	11.000	84.000	125.210	6.153	1.4200	5.7227	8.12628	*0.7501718*	110.945	2500	4030
TC-43825	8.300	103.400	72.050	7.112	2.3100	2.8488	6.58069	*0.8549718*	88.152	2500	8762
TC44925	12.300	91.000	196.870	6.974	1.4600	7.9386	11.59040	0.9706004	136.768	2500	3718
TC-46113	14.500	117.300	243.870	6.909	1.5600	9.9264	15.48523	1.3986199	172.021	2500	3422
TC44932	12.700	150.600	287.760	9.006	2.3600	8.9856	21.20594	2.2228291	168.266	2500	5900
TC-47313	16.500	177.000	334.100	7.925	2.1200	11.8555	25.13366	2.6894492	230.138	2500	4024
TC-48613	21.500	203.000	765.770	8.890	1.8700	24.2234	45.29771	3.8113260	344.309	2500	2726

Table 4.14 Toroidal Core Data (cont.)

EE&EI Planar Ferrite Cores

Manufacturer **Magnetics** Inc.

Part No.	MPL cm	G cm	W_{tfe} grams	W_{tcu} grams	MLT cm	AC cm^2	W_a cm^2	A_p cm^4	K_g cm^5	A_t cm^2	Perm	L
EE-42216	3.12	0.297	13.00	3.98	6.59	0.8060	0.1698	0.1369	0.006693	20.64	2500	3905
EI-44008	4.38	0.356	21.00	9.98	7.77	0.9950	0.3613	0.3595	0.01S416	35.51	2500	4013
EI-43208	3.54	0.318	22.00	9.61	8.93	1.2900	0.3024	0.3901	0.(?22535	33.96	2500	6446
EE-44008	5.19	0.711	26.00	19.96	7.77	1.0100	0.7226	0.7298	0.037951	41.34	2500	3430
EE-43208	4.17	@.635	26.00	19.21	8.93	1.2990	0.6048	0.7802	0.045070	38.22	2500	5465
EI-44308	4.86	0.356	54.00	13.36	8.49	2.2700	0.4426	1.0047	0.107489	40.42	2500	8261
EE-44308	5.75	0.711	64.00	26.71	8.49	2.2700	0.8S52	2.0093	0.214978	47.42	2500	6982

Table 4.15 EE & EI Planar Core Data.

Core Loss Curves
for
Magnetics Ferrite Material Type P @ 80 °C
2500 Perm

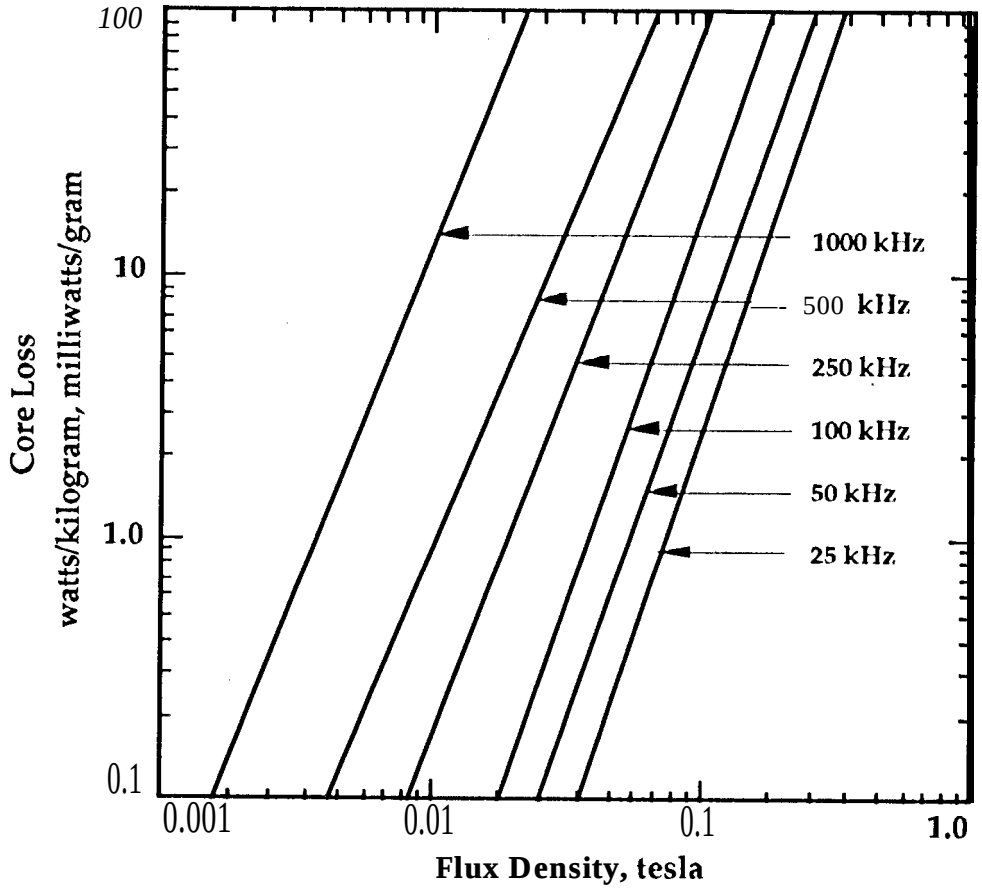

Figure 4.1 Magnetics ferrite material type P@80°C core loss curves.

Core 10ss equation:

$$\text{milliwatts per gram} = 3.18\text{x}10^{-4}(f)^{1.51}(B_{ac})^{2.747}$$

f= Hertz
B_{ac} = Tt'sill

Core Loss Curves
for
Magnetics Ferrite Material Type F @ 25 "C
3000 Perm

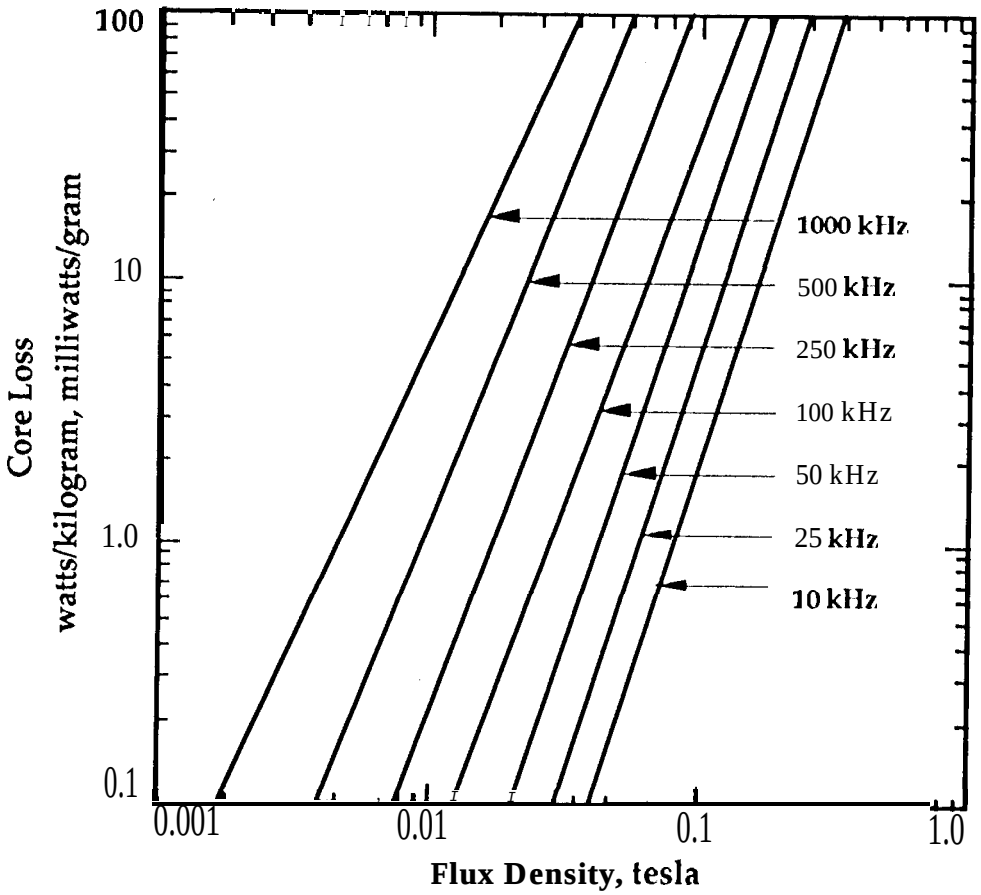

Figure 4.2 Magnetics ferrite material type F @ 25 "C core loss curves.

Core 10ss equation:

$$\text{milliwatts per gram} = 1.64\times10^{-3}(f)^{1.31}(B_{ac})^{2.49}$$

f = Hertz
B_{ac} = Tesla

Core Loss Curves
for
Magnetics Ferrite Material Type R @ 100 °C
2300 Perm

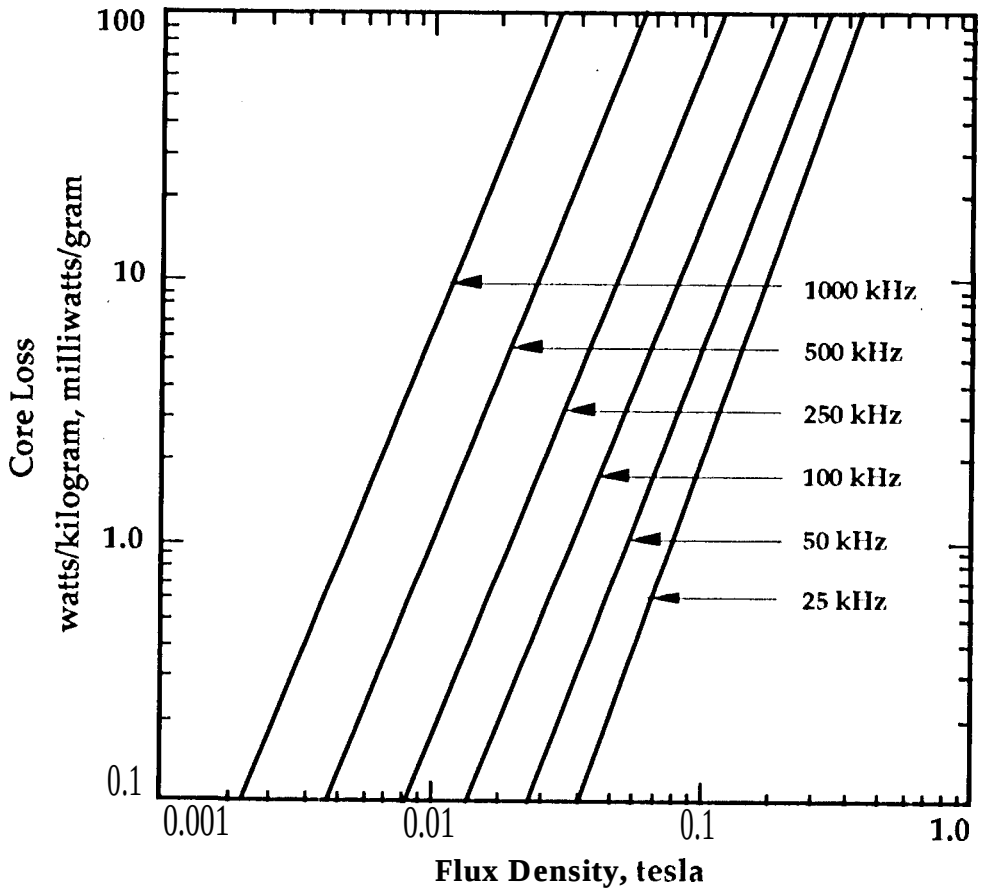

Figure 4.3 Magnetics ferrite material type R @ 1()() °C core loss curves,

Core 10ss equation:

$$\text{milliwatts per gram} = 8.08\text{x}10^{-7}(f)^{2.065}(B_{ac})^{3.059}$$

f= *Hertz*
B_{ac} = *Tesla*

Core Loss Curves
for
Magnetics Ferrite Material Type K @ 80 "C
1500 Perm

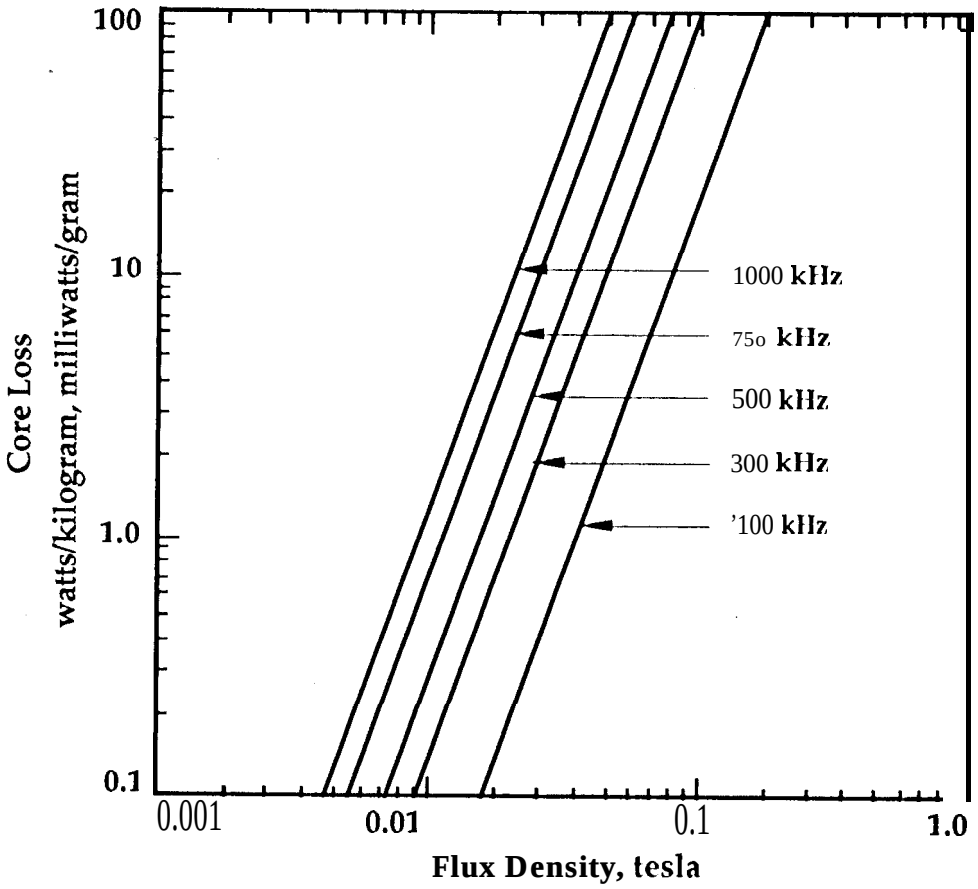

Figure 4.4 Magnetics ferrite material type K @ 80 °C core loss curves,

Core loss equation:

$$\text{milliwatts per gram} = 1.169\times10^{-4}(f)^{1.65}(B_{ac})^{3.149}$$

f = Hertz
B_{ac} = Tesla

Core Loss Curves
for
Magnetics Ferrite Material Type W @ 25 °C
10000 Perm

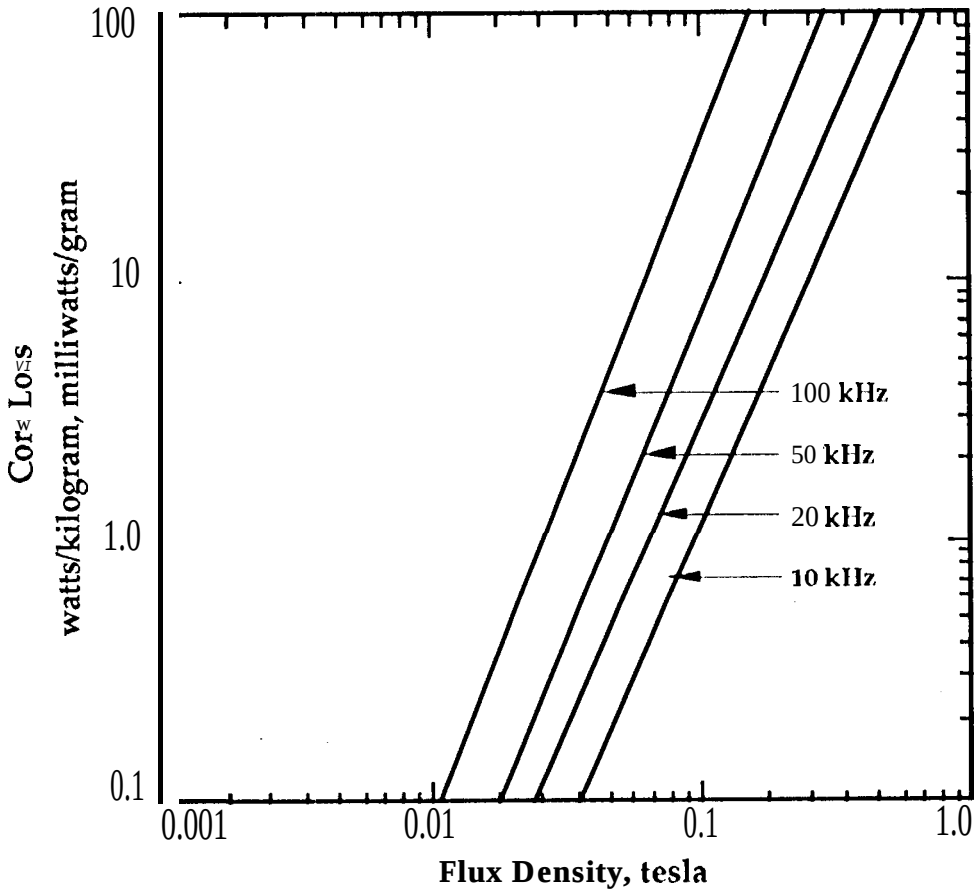

Figure 4.5 Magnetics ferrite material type W @25 °C core loss curves.

Core 10ss equation:

$$\text{milliwatts per gram} = 2.41\text{x}10^{-3}(f)^{1.34}(B_{ac})^{2.65}$$

f= Hertz
B_{ac} = Tesla

Table 4.16 Ferrite Material Characteristics.

Magnetics Inc. Ferrite Materials

Materials		K	R	P	F	w
Inital Permeability	μ_i	1500±25%	2300±25%	2500±25%	3000±25%	10000±30%
Curie Temperature	"C	>230	>230	>230	>250	>125
Flux Density @15 Oe	B_m	0.48T	0.50T	0.50T	0.49T	0.43T
Residual Flux @ 25°C	B_r	0.08T	0.12T	0.12T	0.10T	0.07T
Coercivity (1)	H_c	0.2	0.18	0.18	0.2	0.04
Resistivity (2)	p	20	6	5	2	0.15
Density (3)	δ	4.7	4.8	4.8	4.8	4 . 8

(1) Coercivity, oersted (2) Resistivity, Ω - m (3) Density, g/cm^3

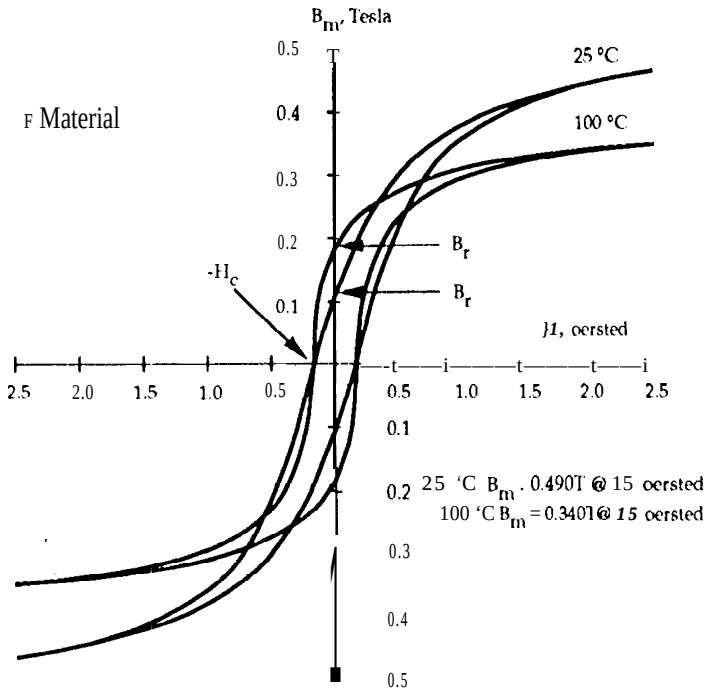

Figure 4.6 F material B-H loop@ 25 °C and IO(I "C.

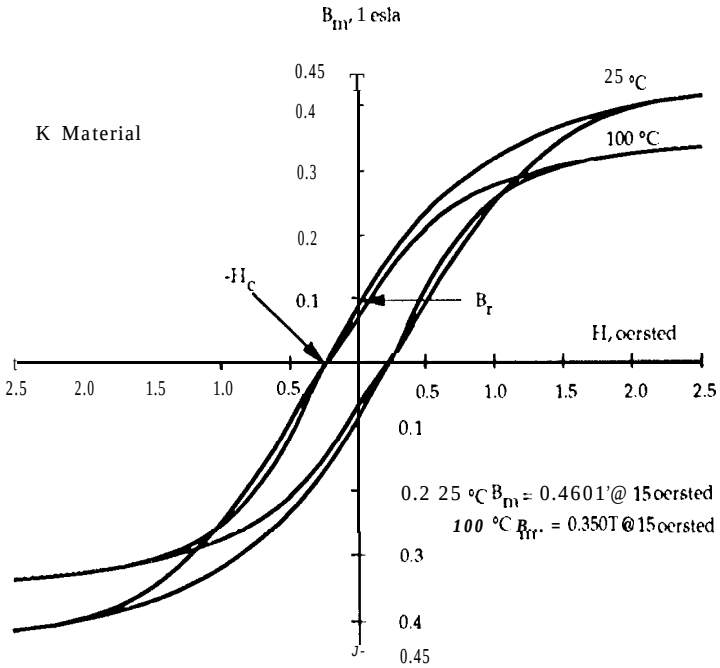

Figure 4.7 K material B-H loop@ 25 °C and 100 °C.

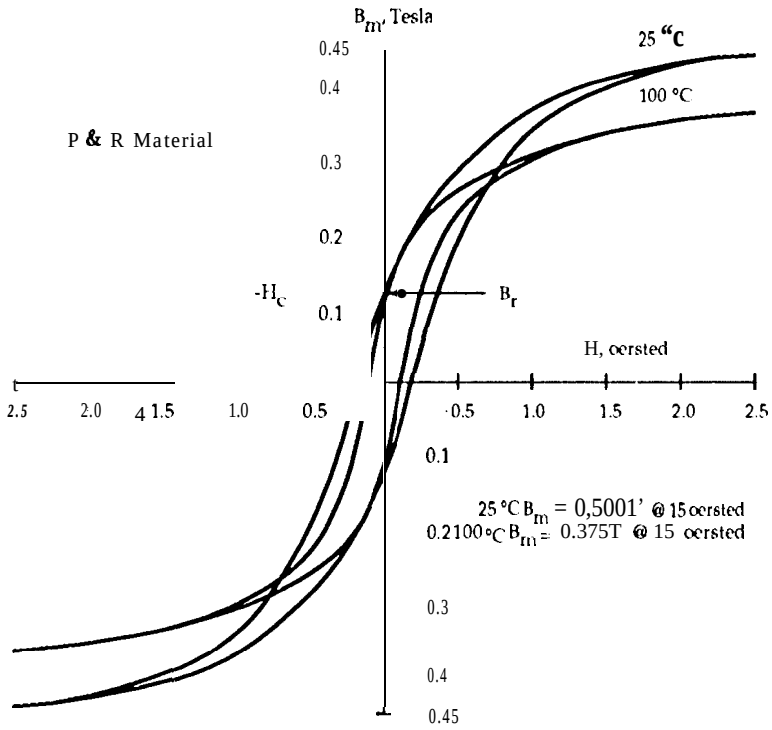

Figure 4.8 1' and R material B-H loop@ 25 °C and 100 °C.

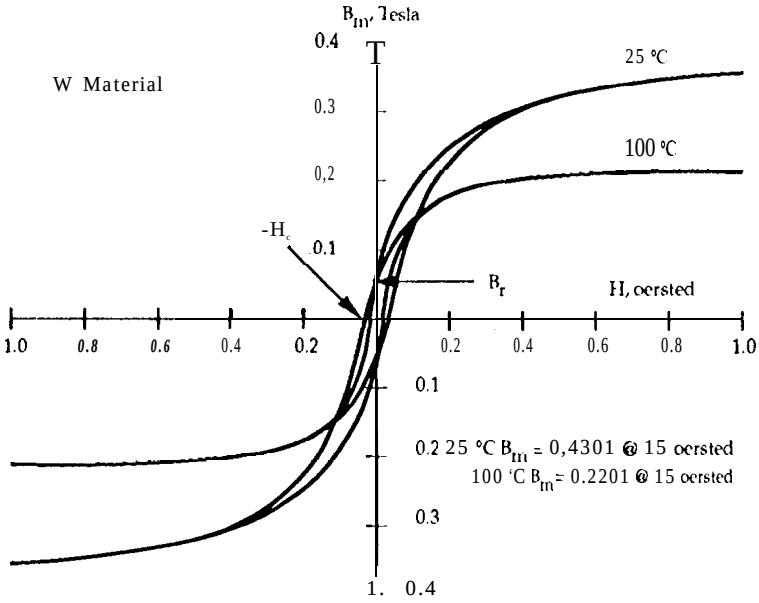

Figure 4.9 W material B-H loop@ 25 "C and 100 °C.

References

1. MMPA Publication "Soft Ferrites a user's Guide," (Catalog SFG-89), Evanston, Illinois
2. Magnetics, "Ferrite Cores," (Catalog FC-601). Div. of Spang Co.
3. Philips Components "Ferrite Material and Components,", (Catalog PC052-1), Saugerties, NY
4. TDK "TDK Ferrite Cores,", (Catalog BAE-030B), Dist., MH&W Inter. Corp. Mahwah, NJ
5. Colonel McLyman, "Magnetic Core Conversion", Kg Magnetics Inc. San Marine, Ca. (Software)

Engineer Notes

0

Chapter 5

Iron Powder Core Data

1. Introduction to Iron Powder 316
2. iron Powder Core Manufacturers. 317
3. information about Core Data Tables. 318
4. Iron Powder Core Data Tables... 319
5. Iron Powder Core Loss Curves.
   - Micrometals 75µ Material Type -26 325
   - Micrometals 35p Material Type -08... 326
   - Micrometals 55µ Material Type -18... 327
   - Micrometals 75p Material Type -52... 328
6. iron Powder versus DC as.... 329
7. Iron Powder Material Characteriscis Table. 330
8. Iron Powder Cores B-H Loops.
   - Micrometals 35p Material Type -08... 331
   - Micrometals 55µ Material Type -18... . . . . 3 3 1
   - Micrometals 75µ Material Type-26. 332
   - Micrometals 75µ Material Type -52... 332
9. References 333

Introduction to Iron Powder Cores

The development of compressed iron powder cores as a magnetic material for inductance coils stemmed from efforts of Bell Telephone Laboratory engineers to find a substitute for fine iron-wire cores. The use of iron powder cores was suggest by Heaviside in 1887 and again by Dolezalek in 1900."

The first iron powder cores of commercially valuable properties were described by Buckner Speed in U.S. Patent No. 1274952 issued in 1918. A paper, "Magnetics Properties of Compressed Powdered Iron," was published by Buckner Speed and G.W. Elman in the A.I.E.E. Transactions in 1921, This paper describes a magnetic material which is well suited to the construction of cores in small inductance coils and transformers such as are used in a telephone system. These iron powder cores were made from 80 Mesh Electrolytic Iron Powder. The material was annealed then insulated by oxidizing the surface of the individual particles. In this way a very thin and tough insulation of grains of iron was obtained, which did not break down when the cores were compressed. A shellac solution was applied to the insulated powder as a further insulator and binder. This was the way that toroidal iron powder cores were manufactured by Western Electric Company until about 1929. The iron powder cores of today are manufactured much the same way, using highly pure iron powder and a more exotic insulator and binder. This prepared powder is compressed under extremely high pressures to produce a solid-looking core. This process creates a magnetic structure with a distributed air-gap. The inherent high saturation flux density of iron combined with the distributed air-gap produces a core material with initial permeability of less than 100 and with high energy storage capabilities,

The dc current does not generate core loss but ac or ripple current does generate core loss. Iron powder material has higher core loss than some other more expensive core materials. Most dc biased inductors have a relatively small percentage of ripple current and, thus, core loss will be minimal. However, core loss will sometimes become a limiting factor in applications with a relatively high percentage of ripple current at very high frequency. Iron powder is not recommended for inductors with discontinuous current or transformers with large ac flux swings,

Low cost iron powder cores are typically used in today's low and high frequency power switching conversion applications for differential-mode input and output power inductors. Because iron powder cores have such low permeability a relative large number of turns is required for the proper inductance thus keeping the ac flux at a minimum. The penalty for using iron powder cores is usually found in the size and efficiency of the magnetic component.

Iron Powder Core Manufacturers

Engineering Notes

Micrometals
1190 North Hawk Circle
Anaheim, California 92807
Phone (800) 356-5977
Phone (714) 630-7420
FAX (714) 633-4562

Rep. No._____

Pyroferric International, Inc.
200 Madison Street
P.O. Box 159
Toledo, Illinois 62468-0159
Phone (217)849-3300
FAX (217) 849-2544

Rep. No._____

Cortec
15672 Chemical Lane
Huntington Beach, California 92649
Phone (714) 897-2529
FAX (714) 897-2170

Rep. No._____

MMG/Neosid North America
126 Pennsylvania Ave.
Paterson, New Jersey 07724
Phone (201) 345-8900
FAX (201) 345-1172

Rep. No._____

Information about the Core Data Tables

[1] **Part** Number

The part number used is close approximation of the manufacturers part number.

[2] MPL

The M1'L is the mean magnetic path length in centimeters.

[3] **G Dimension**

The G dimension is the overall core winding length for bobbin cores in centimeters.

[4] **W_{tfe}**

This is the total weight of the core in grams.

[5] **W_{tcu}**

This is the total weight in grams of the copper using a window utilization Ku of 0.4.

[6] MLT

The MLT is the mean length turn in centimeters.

[7] AC

This is the minimum cross section of the core in square centimeters.

[8] **W_a**

The is the total window area of the core in square centimeters.

[9] **A_p**

The area product A_p is the core area A_c times the window area W_a in centimeters 4th.

[10] **K_g**

The core geometry Kg is in centimeters 5th.

[11] **A_t**

This is the overall surface area At of the magnetic component in square centimeters.

[12] Perm

Perm is the permeability of the magnetic material such as (2500μ).

[13] **A_L**

A_L is the millihenrys per 1000 turns,

Iron Powder Toroidal Cores
Manufacturer Micrometals

Part No.	MPL cm	'tie grams	W_{tcu} grams	MLT cm	AC cm^2	W_a cm^2	A_p cm^4	K_g cm	A_t ^{5} cm^2	Perm		'L
T20-08	1.148	*0.200*	0.100	0.691	0.0245	0.0392	0.00096	0.0000136		1.182	35	7.8
T20-18	1.148	*0.200*	0.100	0.691	0.0245	0.0392	0.00096	0.0000136		1.182	55	13
T20-26	1.148	*0.200*	0.100	0.691	0.0245	0.0392	0.00096	0.0000136		1.182	75	18.5
T20-52	1.148	*0.200*	0.100	0.691	0.0245	0.0392	0.00396	0.0000136		1.182	75	17.5
T25-08	1.495	*0.420*	*0.240*	0.908	0.0406	0.0729	0.00296	0.0000528		2.016	35	10
T25-18	1.495	*0.420*	*0.240*	0.908	0.0406	0.0729	0.00296	0.0000528		2.016	55	17
T25-26	1.495	*0.420*	*0.240*	0.908	0.0406	0.0729	0.00296	0.0000528		2.016	75	24.5
T25-52	1.495	*0.420*	*0.240*	0.908	0.0406	0.0729	0.00296	0.0000528		2.016	75	23
T26-08	1.475	*(?.9s0*	*0.260*	1.311	0.0951	0.0558	*0.00531*	0.0001542		2.634	35	24
T26-18	1.475	*0.980*	*0.260*	1.311	0.0951	*0.0558*	*0.00531*	0.0001542		2.634	55	41.5
T26-26	1.475	*0.980*	*0.260*	1.311	0.0951	*0.0558*	*0.00531*	0.0001542		2.634	75	57
T26-52	1.475	*0.980*	*0.260*	1.311	0.0951	*0.0558*	*0.00531*	0.0001542		2.634	75	56
T30-08	1.826	*0.800*	*0.470*	1.144	0.0625	0.1155	0.00721	0.0001576		3.074	35	14
T30-18	1.826	*0.800*	*0.470*	1.144	0.0625	0.1155	0.00721	0.0001576		3.074	55	22
T30-26	1.826	*0.800*	*0.470*	1.144	0.0625	0.1155	0.00721	0.0001576		3.074	75	33.5
T30-52	1.826	*0.800*	*0.470*	1.144	0.0625	0.1155	0.00721	0.0001576		3.074	75	30.5
T37-08	2.313	1.100	*0.970*	1.282	0.0681	0.2128	*0.01449*	0.0003078		4.534	35	12
T37-18	2.313	1.100	*0.970*	1.282	0.0681	0.2128	0.01449	0.0003078		4.534	55	19
T37-26	2.313	1.100	*0.970*	1.282	0.0681	0.2128	*0.01449*	0.0003078		4.534	75	28.5
T37-52	2.313	1.100	*0.970*	1.282	0.0681	0.2128	*0.01449*	0.0003078		4.534	75	26

Table 5.1 Iron Powder Toroidal Core Data

Iron Powder Toroidal Cores
Manufacturer Micrometals

Part No.	MPL cm	'tfe grams	W_{tcu} grams	MLT cm	AC cm^2	W_a cm^2	A_p cm^4	K_g A_t cm^5	Perm cm^2		'L
T38-08	2.193	1.830	0.850	1.534	0.1189	0.1551	0.01844	0.0005717	4.806	35	20
T38-18	2.193	1.830	0.850	1.534	0.1189	0.1551	0.01844	0.0005717	4.806	55	36
T38-26	2.193	1.830	0.850	1.534	0.1189	0.1551	0.01844	0.0005717	4.806	75	49
T38-52	2.193	1.830	0.850	1.534	0.1189	0.1551	0.01844	0.0005717	4.806	75	49
T44-08	2.667	1.960	1.450	1.540	0.1050	0.2656	0.02788	0.0007601	6.195	35	18
T44-18	2.667	1.960	1.450	1.540	0.1050	0.2656	0.02788	0.0007601	6.195	55	25.5
T44-26	2.667	1.960	1.450	1.540	0.1050	0.2656	0.02788	0.0007601	6.195	75	37
T44-52	2.667	1.960	1.450	1.540	0.1050	0.2656	0.02788	0.0007601	6.195	75	35
T50-08	3.202	2.630	2.960	1.788	0.1171	0.4650	0.05445	0.0014267	8.764	35	17.5
T50-18	3.202	2.630	2.960	1.788	0.1171	0.46.50	0.05445	0.0014267	8.764	55	24
T50-26	3.202	2.630	2.960	1.788	0.1171	0.4650	0.05445	0.0014267	8.764	75	33
T50-52	3.202	2.630	2.960	1.788	0.1171	0.4650	0.05445	0.0014267	8.764	75	33
T50-08B	3.202	3.450	3.360	2.032	0.1541	0.4650	0.07165	0.0021736	9.553	35	23
T50-18B	3.202	3.450	3.360	2.032	0.1.541	0.4650	0.07165	0.0021736	9.553	55	24
T50-26B	3.202	3.450	3.360	2.032	0.1541	0.4650	0.07165	0.0021736	9.553	75	43.5
T50-52B	3.202	3.450	3.360	2.032	0.1541	0.4650	0.07165	0.0021736	9.553	75	43.5
T51-08C	2.791	4..590	1.460	2.032	0.2347	0.2026	'0.04754	0.0021962	8.065	35	37
T51-18C	2.791	4.590	1.460	2.032	0.2347	0.2026	0.04754	0.0021962	8.065	55	55
T51-26C	2.791	4.590	1.460	2.032	0.2347	0.2026	0.04754	0.0021%2	8.065	75	83
T51-52C	2.791	4.590	1.460	2.032	0.2347	0.2026	0.04754	0.0021%2	8.065	75	75

Table 5.1 Iron Powder Toroidal Core Data (cont.)

Iron Powder Toroidal Cores
Manufacturer Micrometals

Part No.	MPL cm	W_{tfe} grams	W_{tcu} grams	MLT cm	A_c cm^2	W_a cm^2	A_p cm^4	K_g cm^5	A_t cm^2	Perm	A_L
T50-26D	3.202	5.180	4.200	2.540	0.2312	0.465	0.10748	0.0039126	11.197	75	72
T50-52D	3.202	5.180	4.200	2.540	0.2312	0.465	0.10748	0.0039126	11.197	75	66
T60-08	3.732	5.050	4.410	2.170	0.1933	0.5718	0.11052	0.0039376	12.202	35	19
T60-18	3.732	5.050	4.410	2.170	0.1933	0.5718	0.11052	0.0039376	12.202	55	34.5
T60-26	3.732	5.050	4.410	2.170	0.1933	0.5718	0.11052	0.0039376	12.202	75	50
T60-52	3.732	5.050	4.410	2.170	0.1933	0.5718	0.11052	0.0039376	12.202	75	47
T68-08	4.227	5.630	5.360	2.174	0.1902	0.6933	0.13190	0.0046165	14.399	35	19.5
T68-18	4.227	5.630	5.360	2.174	0.1902	0.6933	0.13190	0.0046165	14.399	55	29
T68-26	4.227	5.630	5.360	2.174	0.1902	0.6933	0.13190	0.0046165	14.399	75	43.5
T68-52	4.227	5.630	5.360	2.174	0.1902	0.6933	0.13190	0.0046165	14.399	75	40
T68-08A	4.227	7.410	5.960	2.418	0.2503	0.6933	0.17355	0.0071867	15.463	35	26
T68-18A	4.227	7.410	5.960	2.418	0.2503	0.6933	0.17355	0.0071867	15.463	55	39.5
T68-26A	4.227	7.410	5.960	2.418	0.2503	0.6933	0.17355	0.0071867	15.463	75	58
T68-52A	4.227	7.410	5.960	2.418	0.2503	0.6933	0.17355	0.0071867	15.463	75	54
T80-08	5.144	8.450	11.610	2.631	0.2347	1.2409	0.29121	0.0103885	21.396	35	18
T80-18	5.144	8.450	11.610	2.631	0.2347	1.2409	0.29121	0.0103885	21.396	55	31
T80-26	5.144	8.450	11.610	2.631	0.2347	1.2409	0.29121	0.0103885	21.396	75	46
T80-52	5.144	8.450	11.610	2.631	0.2347	1.2409	0.29121	0.0103885	21.396	75	42
T60-26D	3.733	10.140	6.360	3.129	0.3882	0.5718	0.22198	0.0110167	15.868	75	97
T60-52D	3.733	10.140	6.360	3.129	0.3882	0.5718	0.22198	0.0110167	15.868	75	94

Iron Powder Toroidal Cores
Manufacturer Micrometals

Part so.	MPL cm	'tie grams	W_{tcu} grams	MLT cm	AC cm^2	W_a cm^2	A_p cm^4	K_g cm	A_t cm^2	Perm	'L
T68-26D	4.227	11.110	7.210	2.926	0.3755	0.6933	0.26033	0.0133627	17.678	75	87
T68-52D	4.227	11.110	7.210	2.926	0.3755	0.6933	0.26033	0.0133627	17.678	75	80
T94-08	5.591	10.770	16.820	2.979	0.2753	1.5882	0.43724	0.0161637	26.049	35	25
T94-18	5.591	10.770	16.820	2.979	0.2753	1.5882	0.43724	0.0161637	26.049	55	42
T94-26	5.591	10.770	16.820	2.979	0.2753	1.5882	0.43724	0.0161637	26.049	75	60
T94-52	5.591	10.770	16.820	2.979	0.2753	1.5882	0.43724	0.0161637	26.049	75	57
T80-08B	5.1443	12.680	13.850	3.1394	0.3520	1.2409	0.43682	0.0195920	24.026	35	29.5
T80-18B	5.1443	12.680	13.850	3.1394	0.3520	1.2409	0.43682	0.0195920	24.026	55	47
T80-26B	5.1443	12.680	13.850	3.1394	0.3520	1.2409	0.43682	0.0195920	24.026	75	71
T80-52B	5.1443	12.680	13.850	3.1394	0.3520	1.2409	0.43682	0.0195920	24.026	75	63
T80-26D	5.1443	16.900	16.100	3.6474	0.4694	1.2409	0.58243	0.0299792	26.657	75	92
T80-52D	5.1443	16.900	16.100	3.6474	0.4694	1.2409	0.58243	0.0299792	26.657	75	83
T90-08	5.782	16.620	18.270	3.3528	0.4107	1.5320	0.62917	0.0308270	20.309	35	30
T90-18	5.782	16.620	18.270	3.3528	0.4107	1.5320	0.62917	0.0308270	20.309	55	47
T90-26	5.782	16.620	18.270	3.3528	0.4107	1.5320	0.62917	0.0308270	20.309	75'	70
T90-52	5.782	16.620	18.270	3.3528	0.4107	1.5320	0.62917	0.0308270	20.309	75	64
T106-18A	6.500	21.770	20.020	3.4219	0.4784	1.6455	0.78713	0.0440150	34.578	55	49
TIM-26A	6.500	21.770	20.020	3.4219	0.4784	1.6455	0.78713	0.0440150	34.578	75	67
T106-52A	6.500	21.770	20.020	3.4219	0.4784	1.6455	0.78713	0.0440150	34.578	75	67

Table 5.1 Iron Powder Toroidal Core Data (cont.)

Iron Powder Toroidal Cores
Manufacturer Micrometals

Part No.	MPL cm	W_{tie} grams	W_{tcu} grams	MLT cm	A_c cm^2	W_a cm^2	A_p cm^4	K_g cm	A_t cm^2	W_{em}		A_L
T106-O8	6.500	30.490	22.990	3.929	0.6700	1.6455	1.10248	0.0751865		37.984	35	45
T106-I8	6.500	30.490	22.990	3.929	0.6700	1.6455	1.10248	0.0751865		37.984	55	70
T106-26	6.500	30.490	22.990	3.929	0.6700	1.6455	1.10248	0.0751865		37.984	75	93
T106-52	6.503	30.490	22.990	3.929	0.6700	1.6455	1.10248	0.0751865		37.984	75	95
T106-18B	6.500	40.110	26.280	4.4907	0.8816	1.6455	1.45064	0.1139139		41.743	55	91
T106-26B	6.500	40.110	26.280	4.4907	0.8816	1.6455	1.45064	0.1139139		41.743	75	124
T106-52B	6.500	40.110	26.284)	4.4907	0.8816	1.6455	1.45064	0.1139139		41.743	75	124
T130-08	8.295	41.280	48.400	4.4176	0.7110	3.0812	2.19088	0.1410558		56.977	35	35
T130-18	8.295	41.280	48.400	4.4176	0.7110	3.0812	2.19088	0.1410558		56.977	55	58
T130-26	8.295	41.280	48.400	4.4176	0.7110	3.0812	2.19088	0.1410558		56.977	75	81
T130-52	8.295	41.280	48.400	4.4176	0.7110	3.0812	2.19088	0.1410558		56.977	75	79
T132-26	7.976	45.800	38.980	4.4176	0.8204	2.4816	2.03598	0.1512494		53.861	75	103
T132-52	7.976	45.800	38.980	4.4176	0.8204	2.4816	2.03598	0.1512494		53.861	75	95
T131-08	7.736	48.870	32.590	4.4176	0.9025	2.0744	1.87211	0.1529829		51.677	35	52.5
T131-18	7.736	48.870	32.590	4.4176	0.9025	2.0744	1.87211	0.1529829		51.677	55	79
T131-26	7.736	48.870	32.590	4.4176	0.9025	2.0744	1.87211	0.1529829		51.677	75	116
T131-52	7.736	48.870	32.590	4.4176	0.9025	2.0744	1.87211	0.1529829		51.677	75	108
T141-26	9.152	44.180	63.450	4.5496	0.6897	3.9220	2.70497	0.1640231		66.502	75	75
T141-52	9.152	44.180	63.450	4.5496	0.6897	3.9220	2.70497	0.1640231		66.502	75	69

Table 5.1 Iron Powder Toroidal Core Data (cont.)

Iron Powder Toroidal Cores
Manufacturer Micrometals

Part No.	MPL cm	‘tie grams	W_{tcu} grams	MLT cm	A_c cm^2	W_a cm^2	‘P cm^4	K_g cm^5	‘t	Perm cm^2		‘L
T150-26	9.391	59.780	62.290	4.844	0.9093	3.6162	3.28823	0.2468909		71.316	75	96
T150-52	9.391	59.780	62.290	4.844	0.9093	3.6162	3.28823	0.2468909		71.316	75	89
T157-08	10.049	77.790	89.500	5.507	1.1058	4.5707	5.05429	0.4059782		85.237	35	42
T157-18	10.049	77.790	89.5(K!	5.507	1.105s	4.5707	5.0S429	0.4059782		85.237	55	73
T157-26	10.049	77.790	89.500	5.507	1.1058	4.5707	5.0.5429	0.4059782		85.237	75	100
T157-52	10.049	77.790	89.500	5.507	1.1058	4.5707	5.05429	0.4059782		85.237	75	99
T175-18	11.246	108.870	127,790	6.197	1.3830	5.7984	8.01929	0.7158202		107.193	55	82
T175-26	11.246	108.870	127.790	6.197	1.3830	5.7984	8.01929	0.7158202		107.193	75	105
T175-52	11.246	108.870	127.790	6.197	1.3830	5.7984	8.01929	0.7158202		107.193	75	105
T200-08	12.960	117.100	177,260	6.299	1.2907	7.9133	10.21386	0.8371397		131.533	35	42.5
T200-18	12.960	117.100	177.260	6.299	1.2907	7.9133	10.21386	0.8371397		131.533	55	67
T200-26	12.960	117.100	177.260	6.299	1.2907	7.9133	10.21386	0.8371397		131.533	75	92
T200-52	12.960	117.100	177.260	6.299	1.2907	7.9133	10.21386	0.8371397		131.533	75	92
T184-08	11.126	153.990	107.670	6.624	1.9772	4.5707	9.0374	1.0789915		110.062	35	72
T184-18	11.126	153.990	107.670	6.624	1.9772	4.5707	9.0374	1.0789915		110.062	55	116
T184-26	11.126	153.990	107.670	6.624	1.9772	4.5707	9.0374	1.0789915		110.062	75	169
T184-52	11.126	153.990	107.670	6.624	1.9772	45707	9.0374	1.0789915		110.062	75	159
T200-08B	12.960	212.900	228.720	8.128	2.3468	7.9133	18.5706	2.1447382		155.374	35	78.5
T200-18B	12.960	212.900	228.720	8.128	2.3468	7.9133	18.5706	2.1447382		155.374	55	120
T200-26B	12.960	212.900	228.720	8.128	2.3468	7.9133	18.5706	2.1447382		155.374	75	160
T200-52B	12.960	212.900	228.720	8.128	2.3468	7.9133	18.5706	2.1447382		155.374	75	155

Core Loss Curves
for
Micrometals Iron Powder Type -26

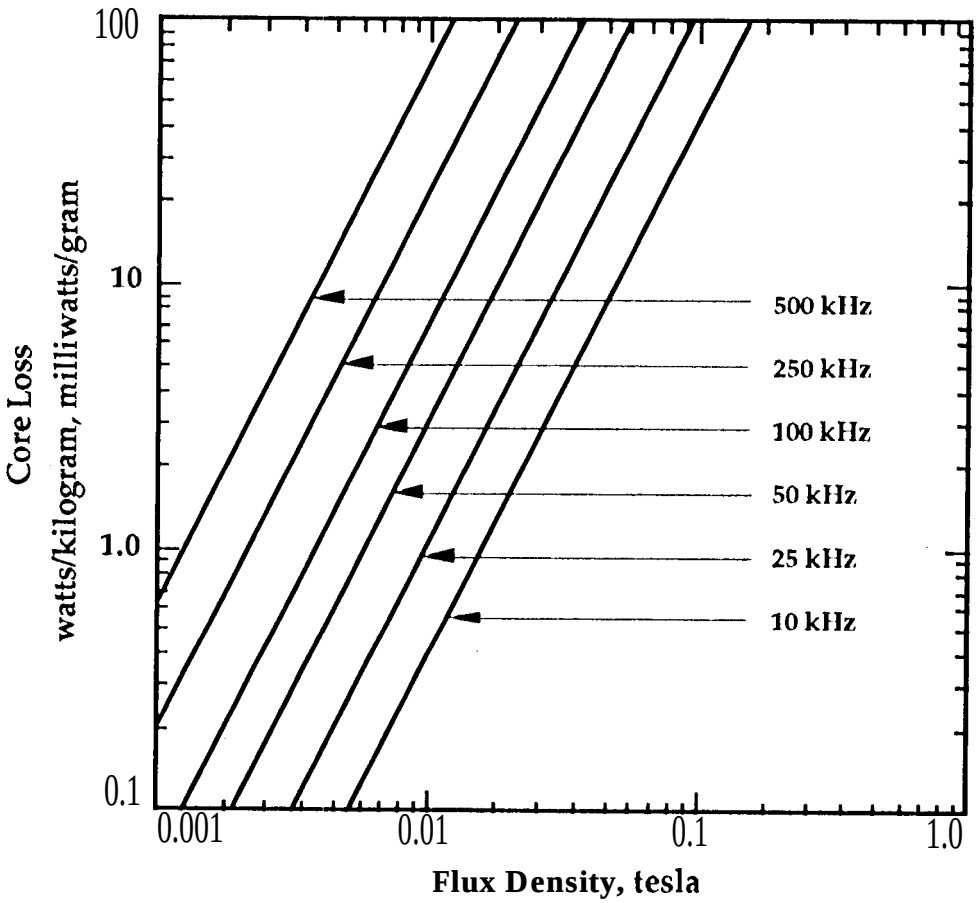

Figure 5.1 Micrometals iron powder material type -26 core loss curves.

Core 10ss equation:

$$\text{milliwatts per gram} = 0.0131(f)^{1.36}(B_{ac})^{2.03}$$

f = Hertz
B_{ac} = Tesla

Core Loss Curves
for
Micrometals Iron Powder Type -8

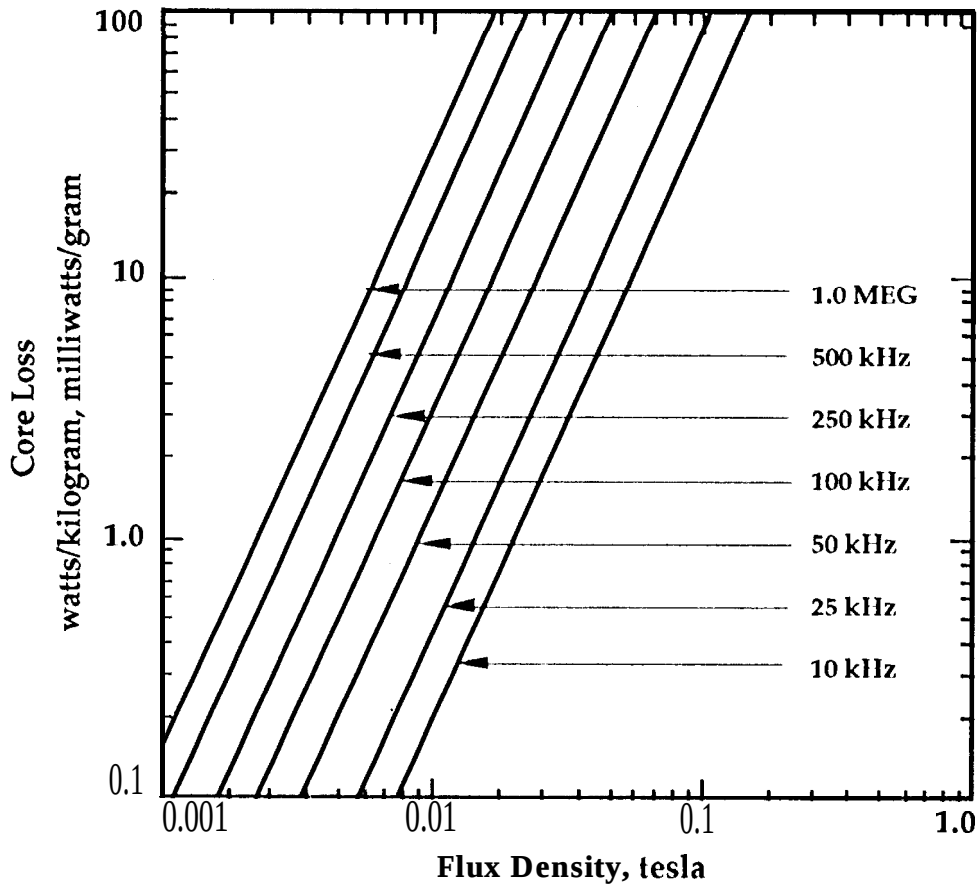

Figure 5,2 Micrometals iron powder material type -8 core loss curves.

Core 10ss equation:

$$\text{milliwatts per gram} = 0.287(f)^{1.13}(B_{ac})^{2.41}$$

f = *Hertz*
B_{ac} = *Tesla*

Core Loss Curves
for
Micrometals Iron Powder Type -18

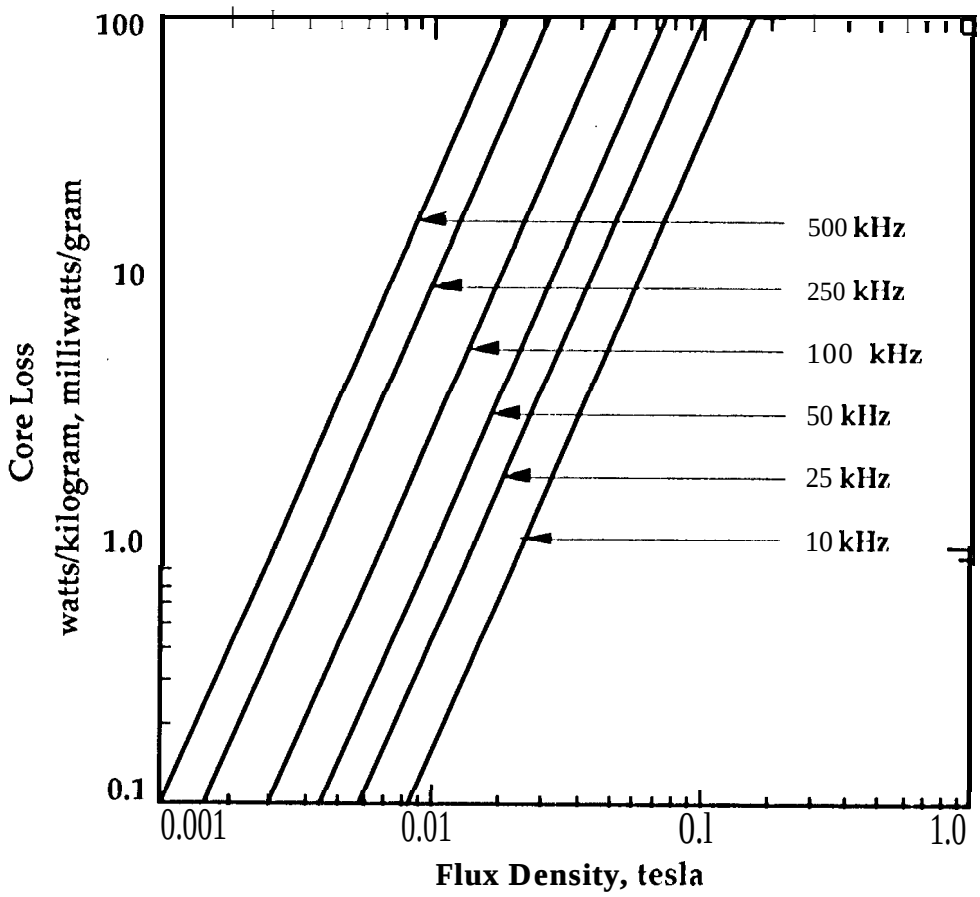

Figure 5.3 Micrometals iron powder material type -18 core loss curves.

Core 10ss equation:

milliwatts per gram = 0.117~)'']8(BJ2'27

f = *Hertz*
B_{ac} = *Tesla*

Core Loss Curves
for
Micrometals Iron Powder Type -52

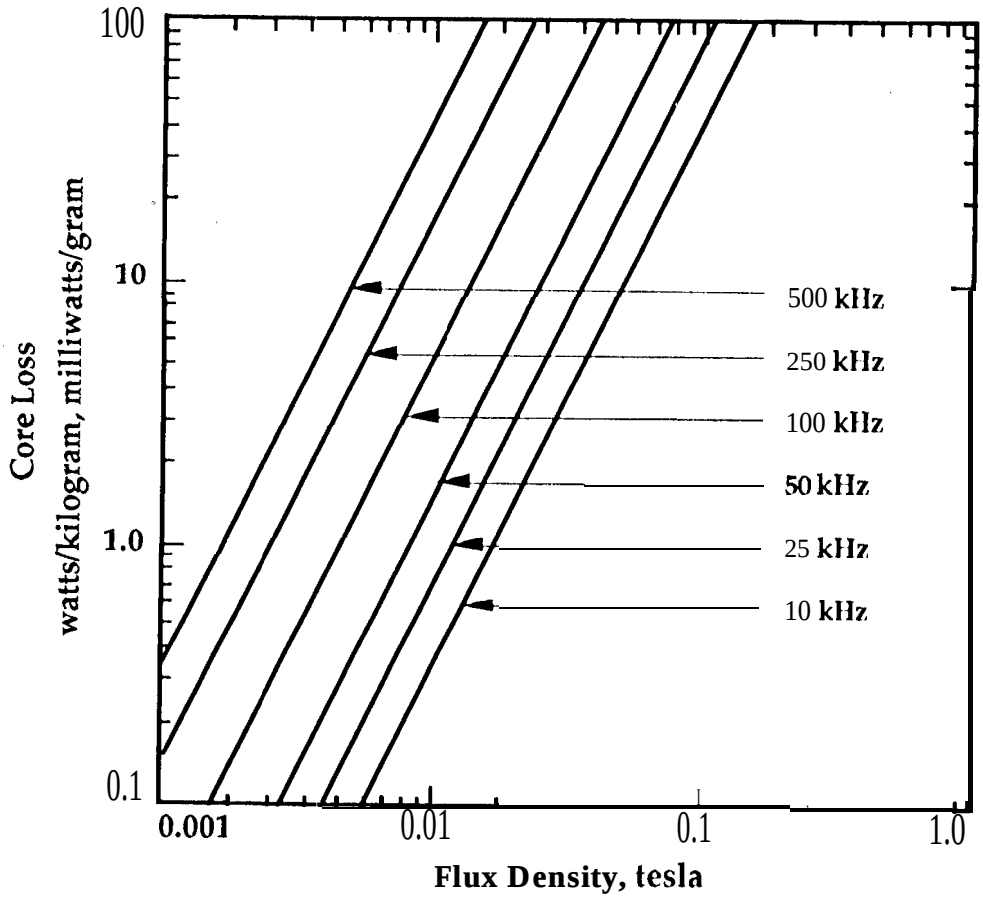

Figure 5.4 Micrometals iron powder material type -52 core loss curves,

Core 10ss equation:

$$\text{milliwatts per gram} = 0.0357(f)^{1.26}(B_{ac})^{2.11}$$

f = Hertz
B_{ac} = Tesla

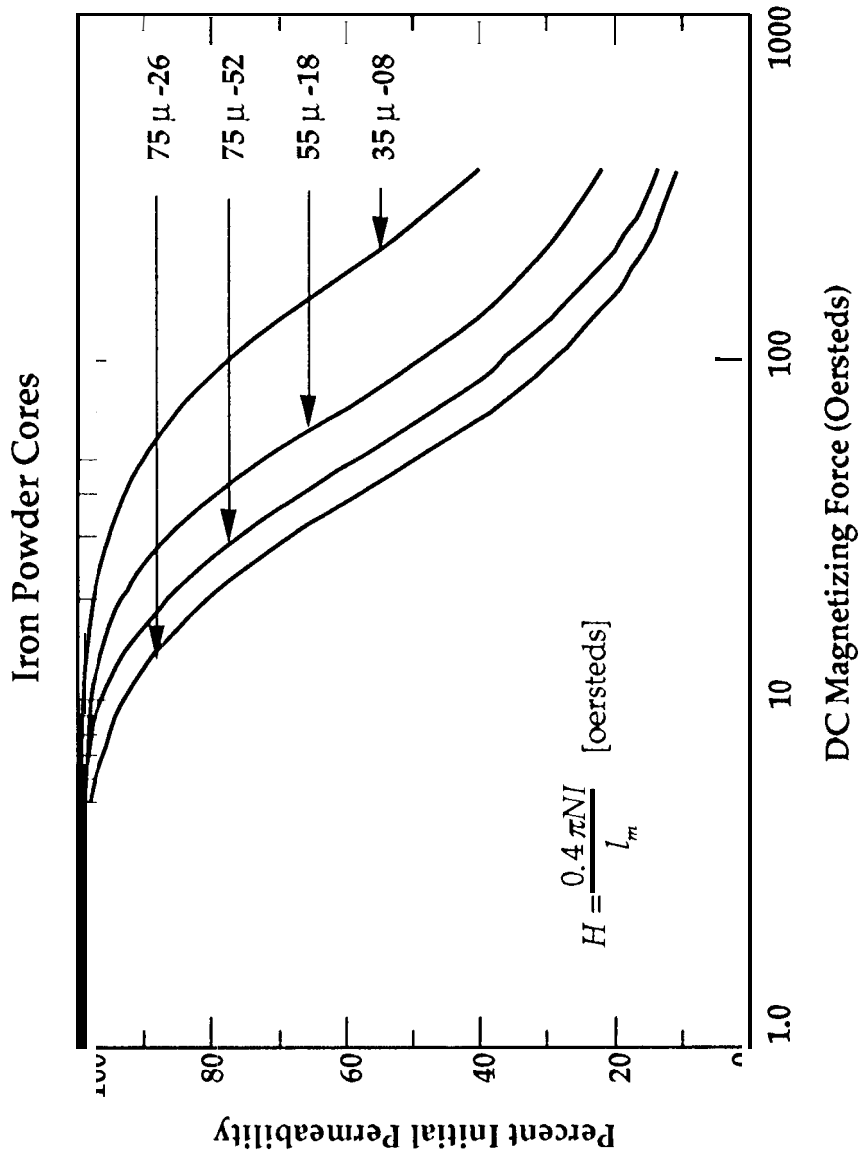

Figure 5.5 Permeability versus dc bias.

Table 5.2 Iron Powder Material Characteristics.

Microme a1s Iron Powder Materials

Materials		-8	-18	-26	-52
Inital Permeability	μ_i	35±10%	55±10%	75±10%	75±10%
Flux Density	B_m	1.25T	1.03T	1.38T	1.40T
Magnetizing Force (1)	H_m	500	250	250	250
Residual Flux	B_r	0.046T	0.094T	0.175T	0.145T
Coercivity (2)	H_c	9.2	8.1	5.5	5.3
Density (3)	δ	6.5	6.6	7.0	7.0

(1) Magnetizing force, oersted (2) Coercivity, oersted (3) Density, g/cm^3

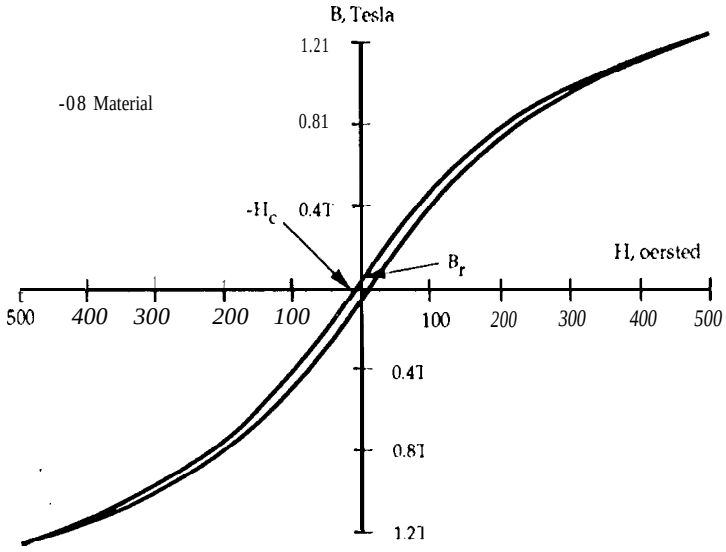

Figure 5.6 Iron powder core type -08 B-H loop.

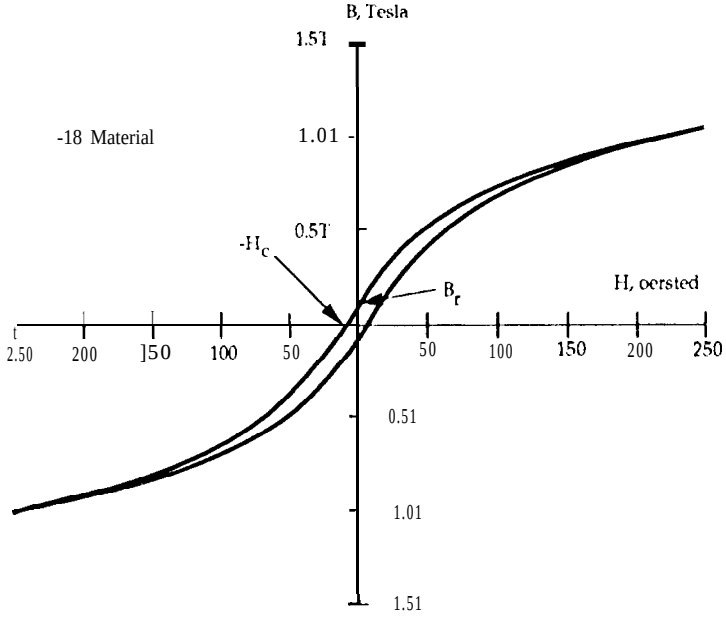

Figure 5.7 Iron powder core type -18 II-H loop.

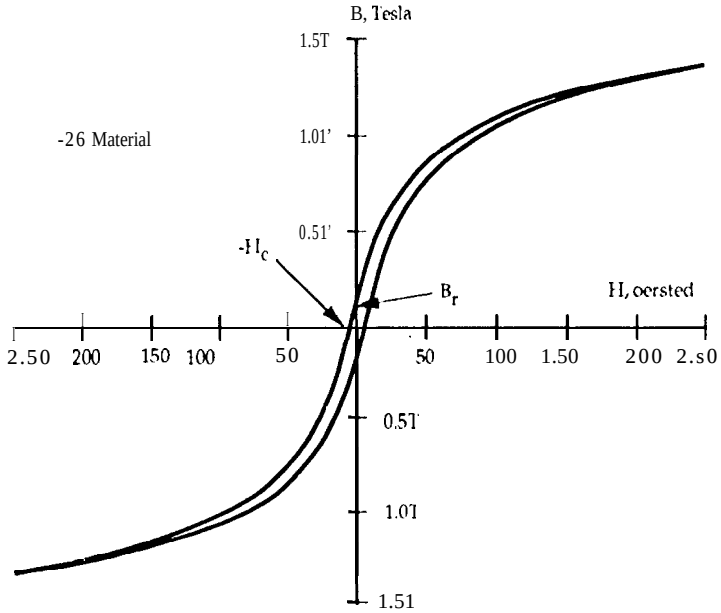

Figure 5.8 Iron powder core type -26 B-H loop.

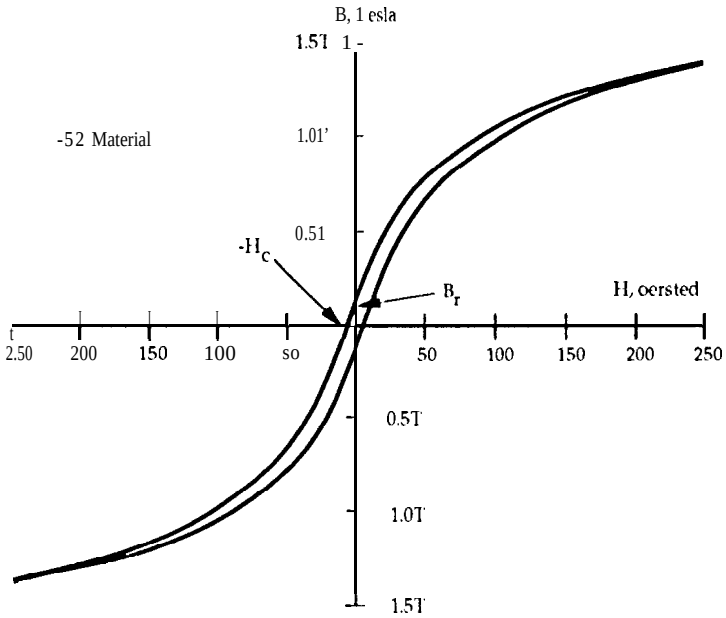

Figure 5.9 Iron powder core type -52 B-H loop.

References

1, Arnold Eng. Co., "Arnold Iron Powder Cores," (Catalog Nn. PC 109-B), Marengo, Illinois

2. Micrometals, "Power Conversion & Line Filter," (Catalog 4 Issue F). Anaheim, Ca.

3. Colonel McLyman, "Magnetic Core Conversion", KG Magnetics Inc. San Marine, Ca. (Software)

Engineering Notes

Chapter 6

Nickel-Iron Powder Cores and Kool Mμ Powder Cores

1. introduction to Nickel-Iron Powder Cores. 336
2. Nickel-Iron Powder Core Manufacturers. 337
3. Information about Core Data Tables 338
4. MPP Powder Core Data Tables 339
5. MI'P Powder Core Loss Curves
   - Magnetics MPP 125μ 343
   - Magnetics MPP 60μ 344
   - Magnetic MPP 26μ 345
6. MPP Permeability versus DC Bias.. 346
7. High Flux Powder Core Data Tables. 347
8. High Flux Powder Core Loss Curves
   - Magnetics High Flux 125p 351
   - Magnetics High Flux 60μ 352
   - Magnetics High Flux 26μ 353
9. High Flux Permeability versus DC Iliac 354
10. Kool Mμ Powder Core Data Tables.. 355
11. Kool Mμ Powder Core Loss Curves
    - Magnetics Kool Mμ 125μ/60μ 359
12. Kool Mμ Permeability versus DC Bias 360
13. Nickel-Iron and Kool Mμ Powder Core Material Characteristics. 361
    - Molypermalloy B-H Loop 362
    - High Flux B-H Loop 362
    - Kool Mμ B-H Loop 363
14. References 364

Introduction to Moly Permalloy Powder Cores

The nickel-iron (Ni-Fe) high permeability magnetic alloys (permalloy) were discovered in 1923, and in 1927 permalloy alloys were successfully used in powder cores, greatly contributing to the carrier wave communications of the time.

In the early 1940's a new molybdenum permalloy powder (MIT') core was developed by the Bell Telephone Laboratory and the Western Electric Company. This new material was developed for loading coils, filter coils, and transformers at audio and carrier frequencies in the telephone facility. The use of such cores has been extended to many industrial and military circuits. The stability of permeability and core losses with time, temperature, and flux level are particular importance to engineers designing tuned circuits and timing circuits. This new material has given reliable and superior performance over all past powder core materials.

The trade name for this material is molybdenum permalloy powder [2 Molybdenum (Mo)-82 Nickel (Ni)-16 Iron (Fe)]; is made by grinding hot rolled and embrittled cast ingots, The alloy is screened to a fineness of 120 mesh for use in audio frequency applications, and 400 mesh for use at high frequencies.

in the power conversion field the MPP core has made its greatest impact in switching power supplies. The use of MPP cores and power MOSFET transistors has permitted increased frequency resulting in greater compactness and weight reduction in computer systems. The power supply is the heart of the system. When the power supply is designed correctly using a moderate temperature rise, the system will last until it becomes obsolete, In these power systems there are switching inductors, smoothing choke coils, common mode filters, input filters, output filters, power transformer, current transformers and pulse transformers. They cannot all be optimally designed using MIT' cores. But in some cases MPP cores are the only ones that will perform in the available space with the proper temperature rise.

Nickel-Iron Powder Cores Manufacturers

Engineering Notes

Magnetics Inc.
9(KI East Butler Road
P.O. Box 391
Butler, I's, 16003
Phone (412) 282-8282
FAX (412) 282-6955

Rep. No.__.__-_-..—.._...–.

Arnold Engineering Co.
300 North West Street
Marengo, Illinois 60152
Phone (815) 568-2000"
FAX (815) 568-2228

Rep. No._____

Information about the Core Data Tables

[1] Part Number

The part number used is close approximation of the manufacturers part number.

[2] **MPL**

The MPL is the mean magnetic path length in centimeters.

[3] G Dimension

The G dimension is the overall core winding length for bobbin cores in centimeters.

[4] **W_{tfe}**

This is the total weight of the core in grams.

[5] **W_{tcu}**

This is the total weight in grams of the copper using a window utilization K_u of 0.4.

[6] MLT

The MLT is the mean length turn in centimeters.

[7] A_c

This is the minimum cross section of the core in square centimeters.

[8] **W_a**

The is the total window area of the core in square centimeters.

[9] **A_p**

The area product A_p is the core area A_c times the window area W_a in centimeters 4th.

[10] **K_g**

't'he core geometry Kg is in centimeters 5th.

[11] **A_t**

This is the overall surface area At of the magnetic component in square centimeters.

[12] **Perm**

Perm is the permeability of the magnetic material such as (2500P)."

[13] **A_L**

A_L is the millihenrys per 1000 turns.

MPP Toroidal Powder Cores
Manufacturer Magnetics Inc.

Part No.	MPL cm	'tfe grams	W_{tcu} grams	MLT cm	A_c cm^2	W_a cm^2	A_p cm^4	K_g cm^5	A_t cm^2	'em	A_L
MP-55022	1.435	0.560	0.140	0.955	0.0482	0.0410	0.00197	0.0000399	1.987	26	10
MP-55021	1.435	0.560	0.140	0.955	0.0482	0.0410	0.02197	0.0000399	1.987	60	24
MP-55020	1.435	0.560	0.140	0.955	0.0482	0.0410	0.00197	0.0000399	1.987	125	50
MP-55032	1.787	0.930	0.380	1.138	0.0602	0.0937	0.00564	0.0031195	3.131	26	11
MP-55031	1.787	0.930	0.380	1.138	0.0602	0.0937	0.00564	0.0001195	3.131	60	25
MP-55030	1.787	0.930	0.380	1.138	0.0602	0.0937	0.00564	0.0031195	3.131	125	52
MP-55282	2.180	1.400	0.650	1.280	0.0751	0.1429	0.01073	0.0002519	4.398	26	11
MP-55281	2.180	1.400	0.650	1.280	0.0751	0.1429	0.01073	0.0002519	4.398	60	25
MP-55280	2.180	1.400	0.650	1.280	0.0751	0.1429	0.01073	0.0002519	4.398	125	53
MP-55292	2.180	1.800	0.710	1.406	0.0937	0.1429	0.01339	0.0003572	4.697	26	14
NIP-55291	2.180	1.800	0.710	1.406	0.0937	0.1429	0.01339	0.0003572	4.697	60	32
MP-55290	2.180	1.800	0.710	1.406	0.0937	0.1429	0.01339	0.0003572	4.697	125	66
MP-55042	2.380	1.900	0.840	1.447	0.0976	0.1641	0.01602	0.0004324	5.145	26	14
MP-55041	2.380	1.900	0.840	1.447	0.0976	0.1641	0.01602	0.0004324	5.145	60	32
NIP-55(I4O	2.380	1.900	0.840	1.447	0.0976	0.1641	0.01602	0.0004324	5.145	125	66
MP-55132	2.690	2.100	1.460	1.528	0.0927	0.2679	0.02485	0.0006032	6.431	26	11
MP-55131	2.690	2.100	1.460	1.528	0.0927	0.2679	0.02485	0.0006032	6.431	60	26
MP-55130	2.690	2.100	1.460	1.528	0.0927	0.2679	0.02485	0.0006032	6.431	125	53

Table 6.1 MPP Toroidal Powder Core Data

MPP Toroidal Powder Cores
Manufacturer Magnetics Inc.

Part No.	MPL cm	$'_{tie}$ grams	W_{tcu} grams	MLT cm	A_c cm^2	W_a cm^2	A_p cm^4	K_g cm^5	A_t	$'_{em}$ cm^2		A_L
MP-55052	3.120	3.100	2.510	1.776	0.1170	0.3971	0.04646	0.0012247		8.677	26	12
MP-55051	3.120	3.100	2.510	1.776	0.1170	0.3971	0.04646	0.0012247		8.677	60	27
MP-55050	3.120	3.100	2.510	1.776	0.1170	0.3971	0.04616	0.0012247		8.677	125	56
NIP-55122	4.110	6.800	6.080	2.337	0.1956	0.7313	0.14302	0.004787		14.989	26	15
MP-55121	4.110	6.800	6.080	2.337	0.1956	0.7313	0.14302	0.004787		14.989	60	35
MP-55120	4.110	6.800	6.080	2.337	0.1956	0.7313	0.14302	0.004787		14.989	125	72
YIP-55382	4.140	8.200	5.600	2.398	0.2347	0.6564	0.15403	0.006030		15.388	26	19
NIP-55381	4.140	8.200	5.600	2.398	0.2347	0.6564	0.15403	0.006030		15.388	60	43
MP-55380	4.140	8.200	5.600	2.398	0.2347	0.6564	0.15403	0.006030		15.388	125	89
MP-55208	5.090	10.020	10.960	2.642	0.2347	1.1669	0.27383	0.009730		21.681	26	14
NIP-55848	5.090	10.030	10.960	2.642	0.2347	1.1669	0.27383	0.009730		21.681	60	32
MP-55206	5.090	10.000	10.960	2.642	0.2347	1.1669	0.27383	0.009730		21.681	125	68
NIP-55312	5.670	16.000	15.420	3.04s	0.3285	1.4226	0.46739	0.020153		27.530	26	19
MP-55059	5.670	16.000	15.420	3.048	0.3285	1.4226	0.46739	0.020153		27.530	60	43
MP-5531O	5.670	16.000	15.420	3.048	0.3285	1.4226	0.46739	0.020153		27.530	125	90
MP-55352	5.880	20.030	17.830	3.308	0.3954	1.5153	0.59909	0.028639		30.261	26	22
MP-55351	5.880	20.000	17.830	3.308	0.3954	1.5153	0..59909	0.028639		30.261	60	51
MP-55350	5.880	20.000	17.830	3.308	0.39.54	1.5153	0.59909	0.028639		30.261	125	105

Table 6.1 MPP Toroidal Powder Core Data (cont.)

MPP Toroidal Powder Cores
Manufacturer Magnetics Inc.

Part No.	MPL cm	W_{fe} grams	W_{cu} grams	MLT cm	A_c cm^2	W_a cm^2	A_p cm^4	K_g cm^5	A_t cm^2	Perm	A_L	
MP-55932	6.350	36.000	22.260	3.942	0.(%09		1.5882	1.0495s	0.070381	38.379	26	32
NIP-55894	6.350	36.000	22.260	3.942	0.%09		1.5882	1.04958	0.070381	38.379	60	75
MP-55930	6.350	36.000	22.260	3.942	0.6609		1.5882	1.04958	0.070381	38.379	125	157
MP-55587	8.950	35.000	60.770	4.165	0.470?		4.1022	1.93182	0.087356	62.498	26	16
MP-55586	8.950	35.000	60.770	4.165	0.4709		4,1022	1.93182	0.087356	62.498	60	38
34P-55585	8.950	35.000	60.770	4.165	0.4709		4.1022	1.93182	0.087356	62.498	125	79
MP-55550	8.150	47.000	45.830	4.348	0.6768		2.9639	2.00597	0.124886	56.598	26	28
MP-55071	8.150	47.000	45.830	4.348	0.6768		2.9639	2.00597	0.124886	56.598	60	61
MP-55548	8.150	47.000	45.830	4.348	0.6768		2.9639	2.00597	0.124886	56.598	125	127
MP-55326	8.980	52.000	60.460	4.539	0.6833		3.7457	2.55927	0.1540819	66.225	26	24
MP-55076	8.980	52.000	60.460	4.539	0.6833		3.7457	2.55927	0.1540819	66.225	60	56
MP-55324	8.980	52.000	60.460	4.539	0.6833		3.7457	2.55927	0.1540819	66.225	125	117
MP-55256	9.840	92.000	85.770	5.507	1.1058		4.3803	4.84371	0.389064	85.2%3	26	35
MP-55083	9.840	92.000	85.770	5.507	1.1058		4.3803	4.84371	0.389064	85.238	60	81
MP-55254	9.840	92.000	85.770	5.507	1.1058		4.3803	4.84371	0.389064	85.238	125	168
MP-55091	11.630	131.000	137.070	6.177	1.3330		6.2400	8.31767	0.717932	114.743	26	37
MP-55090	11.630	131.000	137.070	6.177	1.3330		6.2400	8.31767	0.717932	114.743	60	86
MP-55089	11.630	131.000	137.070	6.177	1.3330		6.2400.	8.31767	0.717932	114.743	125	178

Table 6.1 MPP Toroidal Powder Core Data (cont.)

MPP Toroidal Powder Cores
Manufacturer Magnetics Inc.

Part No.	MPL cm	'tie grams	W_{tcu} grams	MLT cm	AC cm^2	W_a cm^2	A_p cm^4	K_g cm^5	A_t cm^2	Perm	AL
MP-55717	12.730	132.000	169.420	6.218	1.244	7.6621	9.53001	0.762526	130.473	26	32
MP-55716	12.730	132.000	169.420	6.218	1.244	7.6621	9.53001	0.762526	130.473	60	73
MP-55715	12.730	132.000	169.420	6.218	1.244	7.6621	9.53001	0.762526	130.473	125	152
MP-55440	10.740	182.000	103.180	6.624	1.9772	4.3803	8.66085	1.034038	110.062	26	59
MP-55439	10.740	182.000	103.180	6.624	1.9772	4.3803	8.66085	1.034038	110.062	60	135
NIP-55438	10.740	182.000	103.180	6.624	1.9772	4.3803	8.66085	1.034038	110.062	125	281
NIP-55111	14.300	176.000	233.470	6.807	1.463	9.6448	14.10867	1.212742	161.936	26	33
.MP-55I1O	14.300	176.(XKI	233.470	6.807	1.463	9.6448	14.10867	1.212742	161.936	60	75
MP-55109	14.300	176.000	233.470	6.807	1.463	9.6448	14.10867	1.212742	161.936	125	156

Table 6.1 MPP Toroidal Powder Core Data (cont.)

Core Loss Curves
for
Magnetics MPP Powder Core 125 Perm

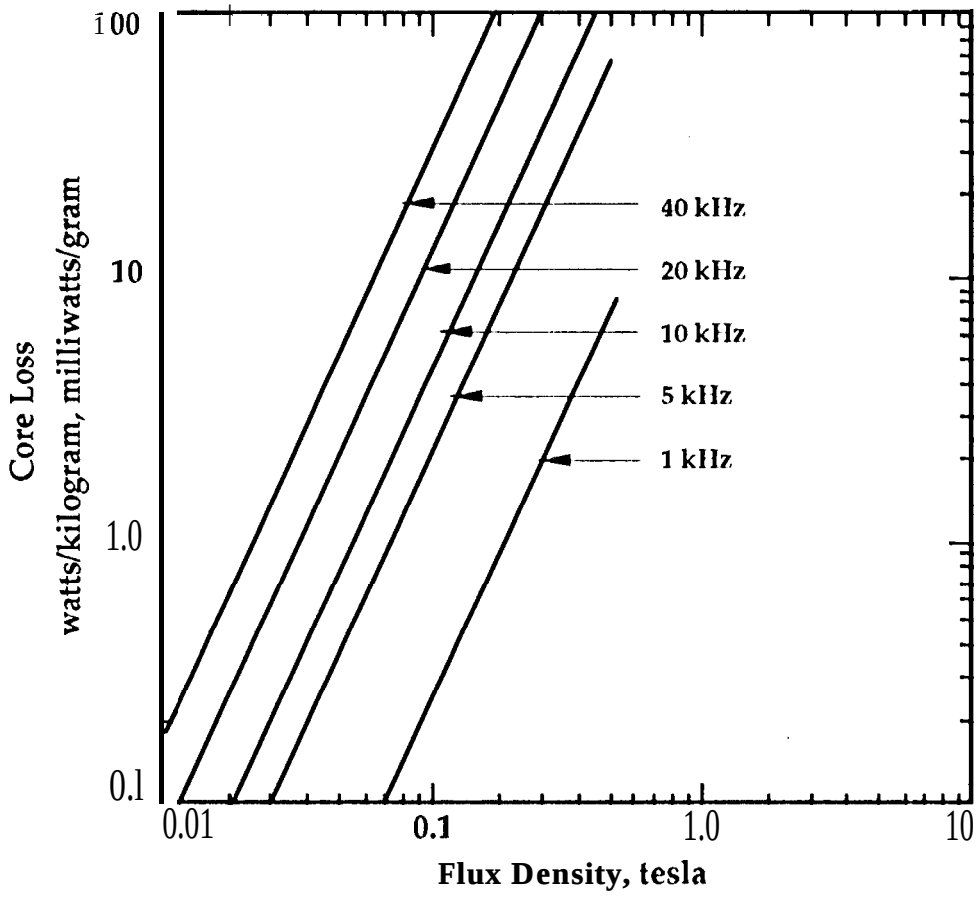

Figure 6.1 Magnetics MPP powder core 125 perm loss curves.

Core 10ss equation:

$$\text{milliwatts per gram} = 3.91\text{x}10^{-3}(f)^{1.28}(B_{ac})^{2.14}$$

f = *Hertz*
B_{ac} = *Tesla*

Core Loss Curves
for
Magnetics MPP Powder **Core 60 Perm**

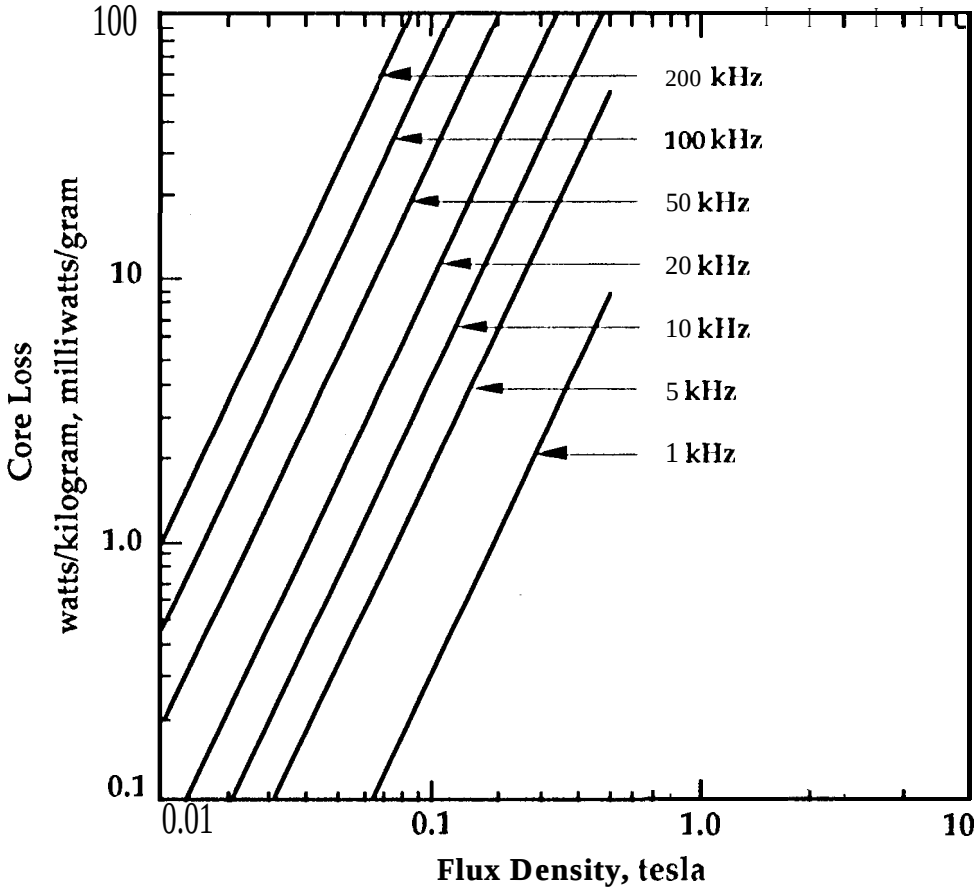

Figure 6.2 Magnetics MPP powder core 60 perm loss curves.

Core 10ss equation:

$$\text{milliwatts per gram} = 5.51\text{x}10^{-3}(f)^{1.23}(B_{ac})^{2.12}$$

f = *Hertz*
B_{ac} = *Tesla*

Core Loss Curves
for
Magnetics MPP Powder Core 26 Perm

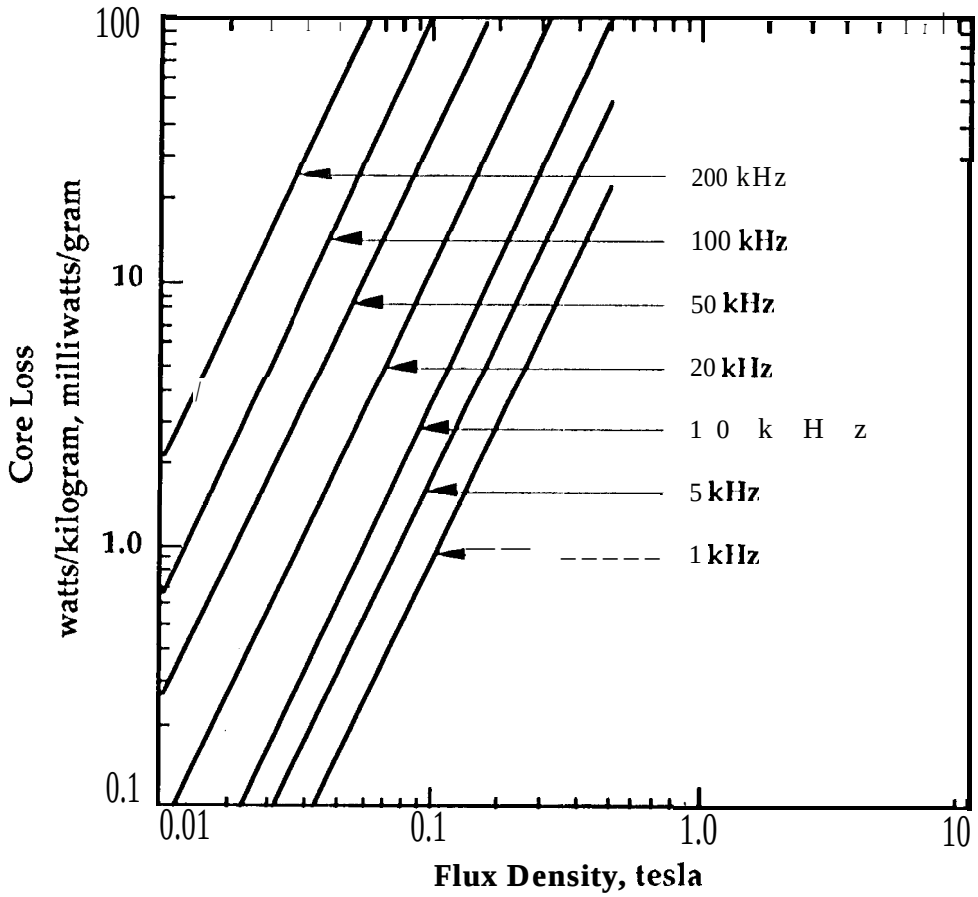

Figure 6.3 Magnetics MIT' powder core 26 perm loss curves.

Core 10ss equation:

$$\text{milliwatts per gram} = 1.51\text{x}10^{-2}(f)^{1.16}(B_{ac})^{2.07}$$

f = *Hertz*
B_{ac} = *Tesla*

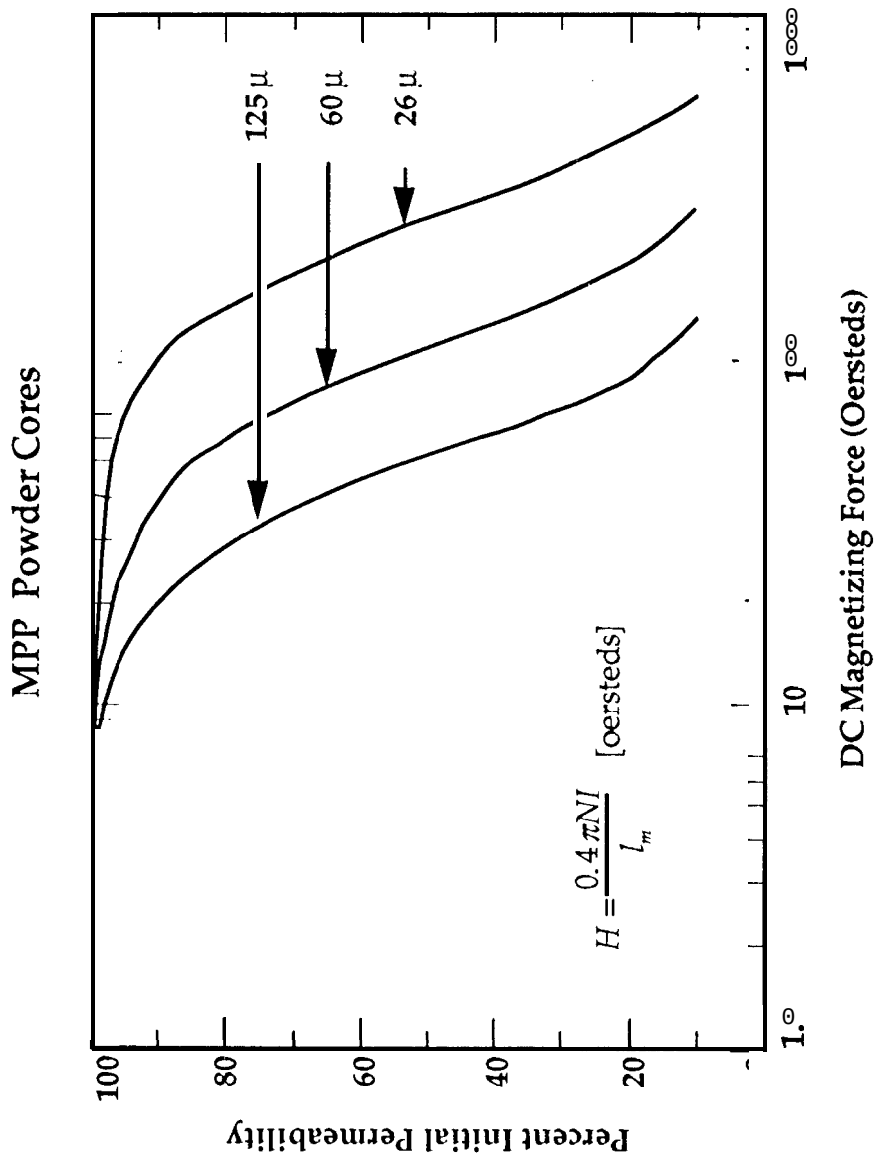

Figure 6.4 Permeability versus dc bias.

High Flux Toroidal Powder Cores
Manufacturer Magnetics Inc.

Part No.	MPL cm	‘tfe grams	‘tcu grams	MLT cm	AC cm^2	W_a cm^2	A_p cm^4	K_g cm^5	A_t cm^2	‘em	A_L
HF-58022	1.435	0.560	0.140	0.955	0.0482	0.0410	0.00197	0.0000399	1.987	26	10
HF-58021	1.435	0.560	0.140	0.955	0.0482	0.0410	0.00197	0.0000399	1.987	60	24
HF-58020	1.435	0.560	0.140	0.955	0.0482	0.0410	0.00197	0.0000399	1.987	125	50
HF-58032	1.787	0.930	0.380	1.138	0.0602	0.0937	0.00564	0.0001195	3.131	26	11
HF-58031	1.787	0.930	0.380	1.138	0.0602	0.0937	0.00564	0.0001195	3.131	60	25
HF-58030	1.787	0.930	0.380	1.138	0.0602	0.0937	0.00564	0.0001195	3.131	125	52
HF-58282	2.180	1.400	0.650	1.280	0.0751	0.1429	0.01073	0.0002519	4.398	26	11
HF-58281	2.180	1.400	0.650	1.280	0.0751	0.1429	0.01073	0.0002519	4.398	60	25
HF-58280	2.180	1.400	0.650	1.280	0.0751	0.1429	0.01073	0.0002519	4.398	125	53
HF-58292	2.180	1.800	0.710	1.406	0.0937	0.1429	0.01339	0.0003572	4.697	26	14
HF-58291	2.180	1.800	0.710	1.406	0.0937	0.1429	0.01339	0.0003572	4.697	60	32
HF-58290	2.180	1.800	0.710	1.406	0.0937	0.1429	0.01339	0.0003572	4.697	125	66
HF-58042	2.380	1.900	0.840	1.447	0.0976	0.1641	0.01602	0.0004324	5.145	26	14
HF-58041	2.380	1.900	0.840	1.447	0.0976	0.1641	0.01602	0.0004324	5.145	60	32
HF-58040	2.380	1.900	0.840	1.447	0.0976	0.1641	0.01602	0.0004324	5.145	125	66
HF-58132	2.690	2.100	1.460	1.528	0.0927	0.2679	0.02485	0.0006032	6.431	26	11
HF-58131	2.690	2.100	1.460	1.528	0.0927	0.2679	0.02485	0.0006032	6.431	60	26
HF-58130	2.690	2.100	1.460	1.528	0.0927	0.2679	0.02485	0.0006032	6.431	125	53

Table 6.2 High Flux Toroidal Powder Core Data

High Flux Toroidal Powder Cores
Manufacturer Magnetics Inc.

Part No.	MPL cm	'tfe grams	W_{tcu} grams	MLT cm	AC cm^2	W_a cm^2	A_p cm^4	K_g cm	A_t ^{5}	Perm cm^2	'L	
HF-58052	3.120	3.100	2.510	1.776	0.1170	0.3971	0.04646	0.0012247		8.677	26	12
HF-58051	3.120	3.100	2.510	1.776	0.1170	0.3971	0.04646	0.0012247		8.677	60	27
HF-58050	3.120	3.100	2.510	1.776	0.1170	0.3971	0.04646	0.0012247		8.677	125	56
HF-58122	4.110	6.800	6.080	2.337	0.1956	0.7313	0.14302	0.004787		14.989	26	15
HF-58121	4.110	6.800	6.080	2.337	0.1956	0.7313	0.14302	0.004787		14.989	60	35
HF-58120	4.110	6.800	6.080	2.337	0.1956	0.7313	0.14302	0.004787		14.989	125	72
HF-58382	4.140	8.200	5.600	2.398	0.2347	0.6564	0.15403	0.006030		15.388	26	19
HF-58381	4.140	8.200	5.600	2.398	0.2347	0.6564	0.15403	0.006030		15.388	60	43
HF-58380	4.140	8.200	5.600	2.398	0.2347	0.6564	0.15403	0.006030		15.388	125	89
HF-58208	5.090	10.000	10.960	2.642	0.2347	1.1669	0.27383	0.009730		21.681	26	14
I-IF-58848	5.090	10.000	10.960	2.642	0.2347	1.1669	0.27383	0.009730		21.681	60	32
HF-58206	5.090	10.000	10.960	2.642	0.2347	1.1669	0.27383	0.009730		21.681	125	68
HF-58312	5.670	16.000	15.420	3.048	0.3285	1.4226	0.46739	0.020153		27.530	26	19
HF-58059	5.670	16.000	15.420	3.048	0.3285	1.4226	0.46739	0.020153		27.530	60	43
HF-5831O	5.670	16.000	15.420	3.048	0.3285	1.4226	0.46739	0.020153		27.530	125	90
HF-58352	5.880	20.000	17.830	3.308	0.3954	1.5153	0.59909	0.028639		30.261	26	22
I-IF-58351	5.880	20.000	17.830	3.308	0.3954	1.5153	0.59909	0.028639		30.261	60	51
FE-58350	5.880	20.000	17.830	3.308	0.3954	1.5153	0.59909	0.028639		30.261	125	105

Table 6.2 High Flux Toroidal Powder Core Data (cont.)

High FIUX Toroidal Powder Cores
Manufacturer Magnetics Inc.

Part No.	MPL cm	'tie grams	'tcu grams	MLT cm	A_c cm^2	W_a cm^2	A_p cm^4	K_g cm	A_t cm^2	Perm	AL
HF-58932	6.350	36.000	22.260	3.942	0.6609	1.5$82	1.(34958	0.070381	38.379	26	32
HF-58894	6.350	36.000	22.260	3.942	0.6609	1.5882	1.04958	0.070381	38.379	60	75
HF-58930	6.350	36.000	22.260	3.942	0.6609	1.5882	1.(24958	0.070381	38.379	125	157
HF-58550	8.150	47.000	45.830	4.34s	0.6768	2.9639	2.(X)597	0.124886	56.598	26	28
HF-58071	8.150	47.000	45.830	4.348	0.6768	2.9639	2.00597	0.124886	56.598	60	61
HF-58548	8.150	47.000	45.830	4.348	0.6768	2.9639	2.00597	0.124886	56.598	125	127
HF-58587	8.950	35.000	60.770	4.165	0.4709	4.1022	1.93182	0.087356	62.498	26	16
HF-58586	8.950	35.000	60.770	4.165	0.4709	4.1022	1.93182	0.087356	62.498	60	38
HF-58585	8.950	35.000	60.770	4.165	0.4709	4.1022	1.93182	0.087356	62.498	125	79
HF-58326	8.980	52.000	60.460	4.539	0.6833	3.7457	2.55927	0.1540$19	66.225	26	24
HF-58076	8.980	52.000	60.460	4.539	0.6'333	3.7457	2.55927	0.1540819	66.225	60	56
HF-58324	8.980	52.000	60.460	4.539	0.6833	3.7457	2.55927	0.1540'819	66.225	125	117
HF-58256	9.840	92.000	85.770	5.507	1.1058	4.3803	4.84371	0.389064	85.238	26	35
HF-58083	9.840	92.000	85.770	5.507	1.1058	4.3803	4.84371	0.389064	85.238	60	81
HF-58254	9.840	92.000	85.770	5.507	1.1058	4.3803	4.84371	0.389064	85.238	125	168
HF-58091	11.630	131.000	137.070	6.177	1.3330	6.2400	8.31767	0.717932	114.743	26	37
HF-58090	11.630	131.000	137.070	6.177	1.3330	6.2400	8.31767	0.717932	114.743	60	86
HF-58089	11.630	131.000	137.070	6.177	1.3330	6.2400	8.31767	0.717932	114.743	125	178

Table 6.2 High Flux Toroidal Powder Core Data (cont.)

High Flux Toroidal Powder Cores
Manufacturer Magnetics Inc.

Part No.	MPL cm	'tie grams	W_{tcu} grams	MLT cm	AC cm^2	W_a cm^2	A_p cm^4	K_g cm	A_t cm^2	Perm	AL
HF-58717	12.730	132.000	169.420	6.218	1.244	7.6621	9.53001	0.762526	130.473	26	32
HF-58716	12.730	132.000	169.420	6.218	1.244	7.6621	9.53001	0.762526	130.473	60	73
HF-58715	12.730	132.000	169.420	6.218	1.244	7.6621	9.53001	0.762526	130.473	125	152
HF-58440	10.740	182.000	103.180	6.624	1.9772	4.3803	8.66085	1.034038	110.062	26	59
HF-58439	10.740	182.000	103.180	6.624	1.9772	4.3803	8.66085	1.034038	110.062	60	135
HF-58438	10.740	182.000	103.180	6.624	1.9772	4.3803	8.66085	1.034038	110.062	125	281
HF-58111	14.300	176.000	233.470	6.807	1.463	9.6448	14.10867	1.212742	161.936	26	33
HF-5811O	14.300	176.000	233.470	6.807	1.463	9.6448	14.10867	1.212742	161.936	60	75
HF-58109	14.300	176.000	233.470	6.807	1.463	9.6448	14.10867	1.212742	161.936	125	156

Table 6.2 High Flux Toroidal Powder Core Data (cont.)

Core Loss Curves
for
Magnetics High Flux Powder Core 125 Perm

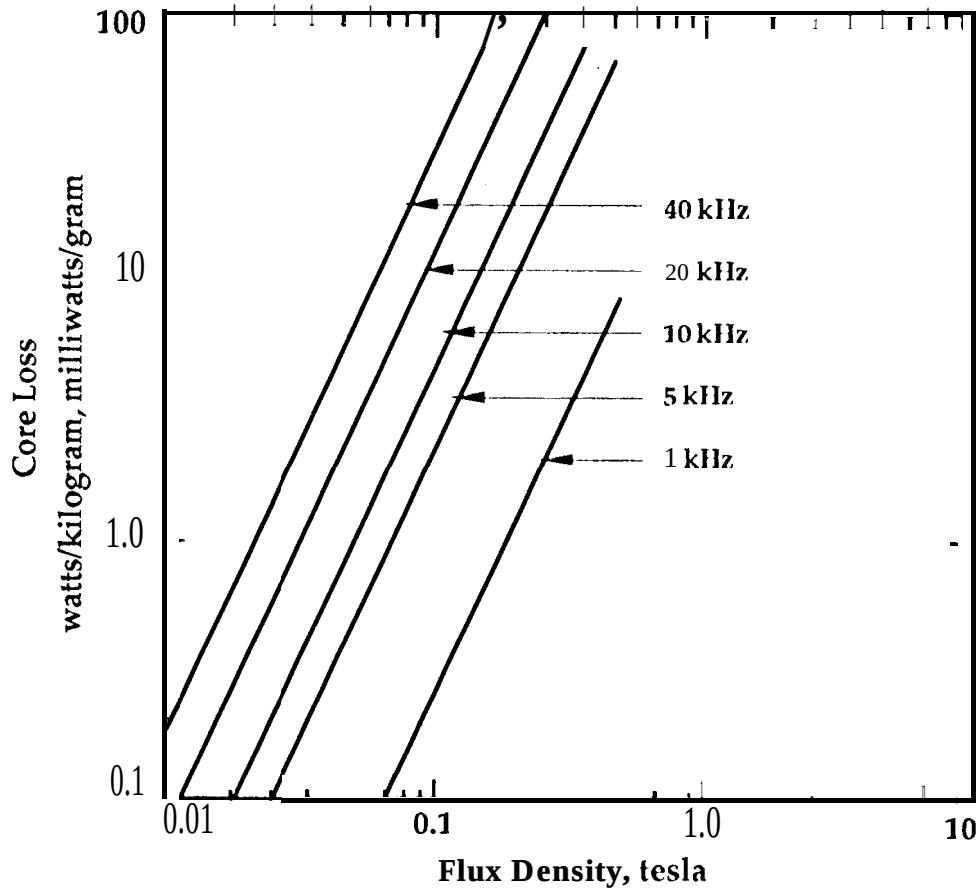

Figure 6.5 Magnetics high flux powder core 125 perm loss curves.

Core 10ss equation:

$$\text{milliwatts per gram} = 1.26 \times 10^{-2} (f)^{1.46} (B_{ac})^{2.59}$$

f = Hertz
B_{ac} = Tesla

Core Loss Curves
for
Magnetics High Flux Powder Core 60 Perm

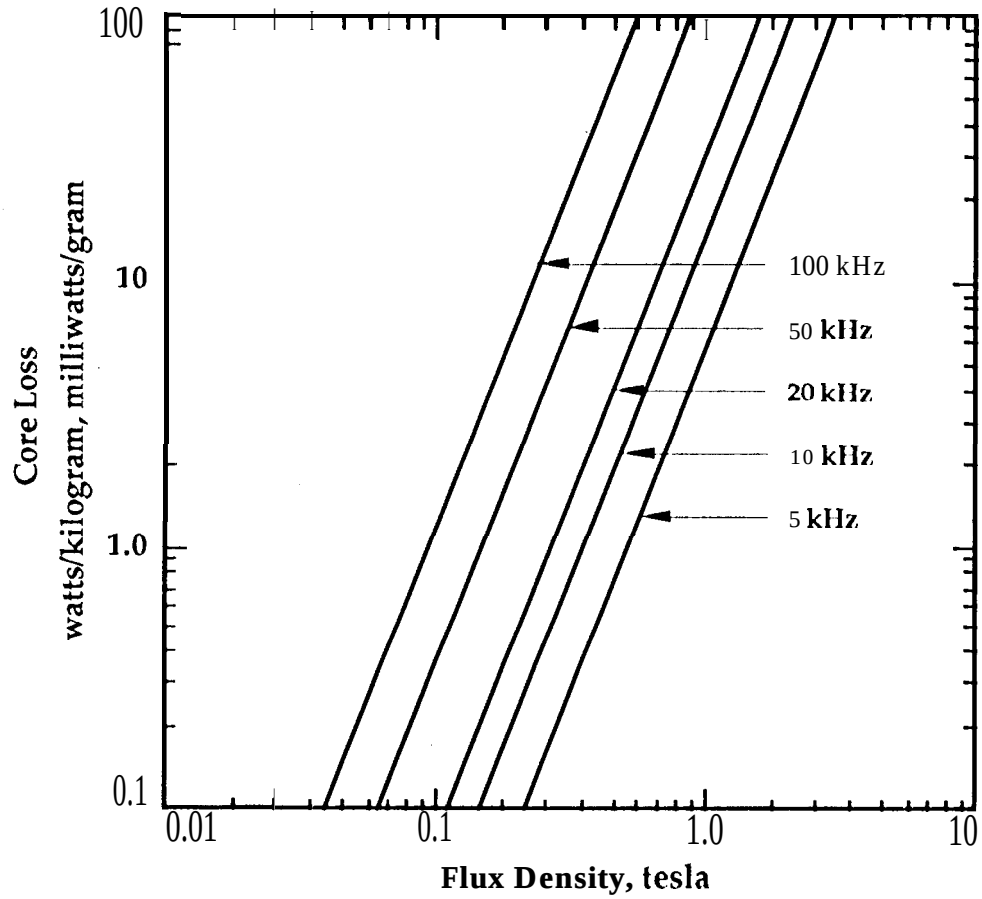

Figure 6.6 Magnetics high flux powder core 60 perm loss curves.

Core 10ss equation:

$$\text{milliwatts per gram} = 1.569 \times 10^{-2} (f)^{1.4} (B_{ac})^{2.55}$$

$f = Hertz$
$B_{ac} = Tesla$

Core Loss Curves
for
Magr etics High Flux Powder Core 26 Perm

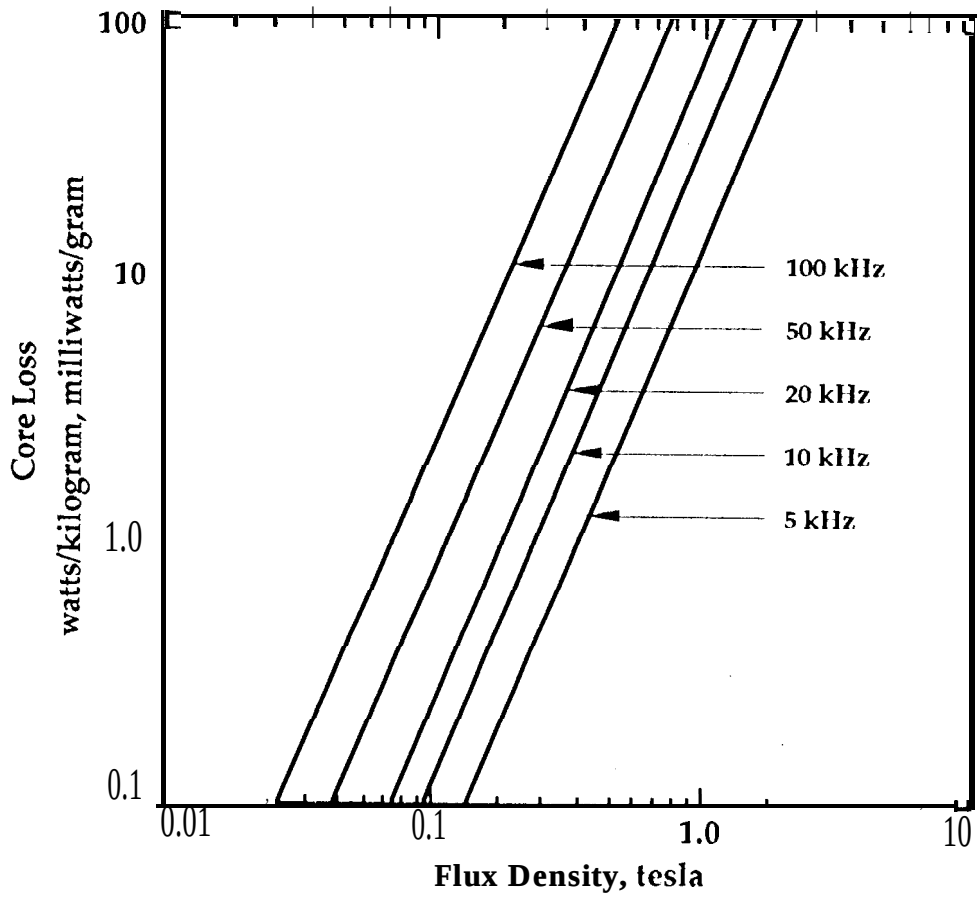

Figure 6.7 Magnetics high flux powder core 26 perm loss curves.

Core 10ss equation:

$$\text{milliwatts per gram} = 3.18\text{x}10^{-2}(f)^{1.4}(B_{ac})^{2.54}$$

f = *Hertz*
B_{ac} = *Tesla*

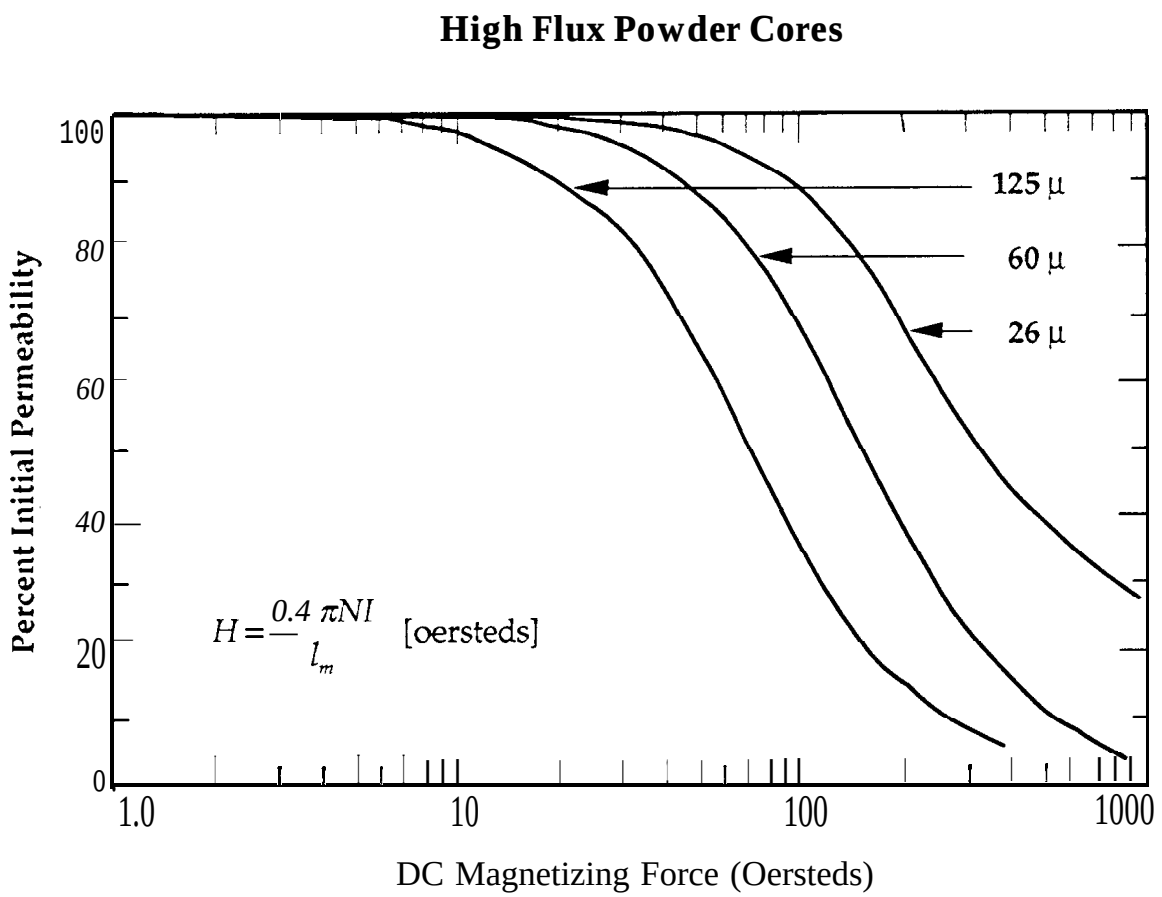

Figure 6.8 Permeability versus dc bias.

Kool Mu Toroidal Powder Cores
Manufacturer Magnetics Inc.

Part No.	MPL cm	'tfe grams	W_{tcu} grams	MLT cm	AC cm^2	W_a cm^2	A_p cm^4	K_g cm^5	A_t cm^2	Perm	A_L
KM-77021	1.435	0.393	0.140	0.955	0.0482	0.0410	0.00197	0.0000399	1.987	60	24
KM-77825	1.435	0.393	0.140	0.955	0.0482	0.0410	0.00197	0.0000399	1.987	75	30
KM-77824	1.435	0.393	0.140	0.955	0.0482	0.04A0	0.00197	0.0000399	1.987	90	36
KM-77020	1.435	0.393	0.140	0.955	0.0482	0.0410	0.00197	0.0000399	1.987	125	50
KM-77031	1.787	0.676	0.380	1.138	0.0602	0.0937	0.00.%4	0.0001195	3.131	60	25
KM-77835	1.787	0.676	0.380	1.138	0.0602	0.0937	0.00564	0.0001195	3.131	75	31
KM-77934	1.787	0.676	0.380	1.138	0.0602	0.0937	0.00564	0.0001195	3.131	90	37
KM-77030	1.787	0.676	0.380	1.138	0.0602	0.0937	0.00564	0.0001195	3.131	125	52
KM-77281	2.180	1.008	0.650	1.2s0	0.0751	0.1429	0.01073	0.0002519	4.398	60	25
KM-77885	2.180	1.008	0.650	1.280	0.0751	0.1429	0.01073	0.0002519	4.398	75	32
KM-77884	2.180	1.(?08	0.650	1.280	0.0751	0.1429	0.01073	0.0002519	4.398	90	38
KM-77280	2.190	1.008	0.650	1.280	0.0751	0.1429	0.01073	0.0002519	4.39S	125	53
KM-77041	2.380	1.460	0.s40	1.447	0.0976	0.1641	0.01602	0.0004324	5.145	60	32
KM-77845	2.3S0	1.460	0.s40	1.447	0.0976	0.1641	0.01602	0.0004324	5.145	75	40
KM-77844	2.3S0	1.460	0.s40	1.447	0.0976	0.1641	0.01602	0.0004324	5.145	90	48
KM-77040	2.380	1.460	0.s40	1.447	0.0976	0.1641	0.01602	0.0004324	5.145	125	66
KM-77131	2.690	1.499	1.460	1.528	0.0927	0.2679	0.024S5	0.0006032	6.431	60	26
KM-77335	2.690	1.499	1.460	1.528	0.0927	0.2679	0.02485	0.0006032	6.431	75	32
KM-77334	2.690	1.499	1.460	1.52S	0.0927	0.2679	0.02485	0.0006032	6.431	90	38
KM-77130	2.690	1.499	1.460	1.528	0.0927	0.2679	0.02485	0.0006032	6.431	125	53

Table 6.3 Kool Mμ Toroidal Powder Core Data

Kool Mμ Toroidal Powder Cores
Manufacturer Magnetics Inc.

Part No.	MPL cm	'tfe grams	W_{tcu} grams	MLT cm	AC cm^2	W_a cm^2	A_p cm^4	K_g cm^5	A_t	'em cm^2		A_L
KM-77051	3.120	2.2W	2.510	1.776	0.1170	0.3971	0.04646	0.0012247		8.677	60	27
KM-77055	3.120	2.200	2.510	1.776	0.1170	0.3971	0.04646	0.0012247		8.677	75	34
KM-77054	3.120	2.200	2.510	1.776	0.1170	0.3971	0.04646	0.0012247		8.677	90	40
KM-77050	3.120	2.200	2.510	1.776	0.1170	0.3971	0.04646	0.0012247		9.677	125	56
KM-77121	4.110	4.900	6.080	2.337	0.1956	0.7313	0.14302	0.004787		14.989	60	35
KM-77225	4.110	4.900	6.080	2.337	0.1956	0.7313	0.14302	0.004787		14.989	75	43
KM-77224	4.110	4.900	6.080	2.337	0.1956	0.7313	0.14302	0.004787		14.989	90	52
KM-77120	4.110	4.900	6.080	2.337	0.1956	0.7313	0.14302	0.004787		14.989	125	72
KM-77848	5.090	7.100	10.960	2.642	0.2347	1.1669	0.27383	0.009730		21.681	60	32
KM-77211	5.090	7.100	10.960	2.642	0.2347	1.1669	0.27383	0.009730		21.681	75	41
KM-77210	5.090	7.100	10.960	2.642	0.2347	1.1669	0.27383	0.009730		21.681	90	49
KM-77206	5.090	7.100	10.960	2.642	0.2347	1.1669	0.273S3	0.009730		21.681	125	68
KM-77059	5.670	11.500	15.420	3.048	0.3285	1.4226	0.46739	0.020153		27.530	60	43
KM-77315	5.670	11.500	15.420	3.048	0.3285	1.4226	0.46739	0.020153		27.530	75	54
KM-77314	5.670	11.500	15.420	3.048	0.3285	1.4226	0.46739	0.020153		27.530	90	65
ICV-7731O	5.670	11.500	15.420	3.049	0.3285	1.4226	0.46739	0.020153		27.530	125	90
KM-77894	6.350	25.500	22.260	3.942	0.6609	1.5882	1.04958	0.070381		38.379	60	75
KM-77935	6.350	25.500	22.260	3.942	0.6609	1.5882	1.04958	0.070381		38.379	75	94
KM-77934	6.350	25.500	22.260	3.942	0.6609	1.5882	1.04958	0.070381		38.379	90	113
KM-77930	6.350	25.500	22.260	3.942	0.6609	1.5882	1.04958	0.070381		38.379	125	157

Table 6.3 Kool Mμ Toroidal Powder Core Data (cont.)

Kool Mμ Toroidal P... der Cores
Manufacturer Magnetics Inc.

Part No.	MPL cm	W_{tfe} grams	W_{tcu} grams	MLT cm	A_c cm^2	W_a cm^2	A_p cm^4	K_g cm^5	A_t cm^2	Perm	AL
KM-77071	8.150	33.700	45.830	4.348	0.6768	2.9639	2.00597	0.124886	56.598	60	61
KM-77553	8.150	33.700	45.830	4.34s	0.6768	2.9639	2.00597	(?.124886	56.598	75	76
KIM-77552	8.150	33.700	45.830	4.348	0.6768	2.9639	2.00597	0.124886	56.598	90	91
KM-77548	8.150	33.700	45.830	4.348	0.6768	2.9639	2.00597	0.124886	56.598	125	127
KM-77586	9.950	25.000	60.770	4.165	0.4709	4.1022	1.93182	0.087356	62.498	60	38
KM-77590	8.950	25.000	60.770	4.165	0.4709	4.1022	1.93182	0.087356	62.498	75	47
KM-77599	8.950	25.000	60.770	4.165	0.4709	4.1022	1.93192	0.087356	62.498	90	57
KM-77585	8.950	25.000	60.770	4.165	0.4709	4.1022	1.93182	0.0S7356	62.498	125	79
KM-77076	8.980	37.400	60.460	4.539	0.6833	3.7457	2.55927	0.1540919	66.225	60	56
KM-77329	8.980	37.400	60.460	4.539	0.6833	3.7457	2.55927	0.1540S19	66.225	75	70
KM-77328	8.980	37.400	60.460	4.539	0.6833	3.7457	2.55927	0.1540$19	66.225	90	84
KM-77324	8.980	37.400	60.460	4.539	0.6833	3.7457	2.55927	0.1540819	66.225	125	117
KM-77083	9.840	64.900	85.770	5.507	1.1058	4.3803	4.84371	0.389064	85.238	60	81
KM-77259	9.840	64.900	85.770	5.507	1.1058	4.3803	4.84371	0.3s9064	85.238	75	101
ICI-77258	9.840	64.900	85.770	5.507	1.1058	4.3s03	4.84371	0.389064	85.238	90	121
KM-77254	9.840	64.900	85.770	5.507	1.1058	4.3803	4.84371	0.389064	85.238	125	168
KM-77090	11.630	96.000	137.070	6.177	1.3330	6.2400	8.31767	0.717932	114.743	60	86
KM-77(?94	11.630	96.000	137.070	6.177	1.3330	6.2400	8.31767	0.717932	114.743	75	107
KM-77093	11.630	96.000	137.070	6.177	1.3330	6.2400	8.31767	0.717932	114.743	90	128
KM-77089	11.630	96.000	137.070	6.177	1.3330	6.2400	S.31767	0.717932	114.743	125	178

Table 6.3 Kool Mμ Toroidal Powder Core Data (cont.)

Kool Mμ Toroidal Powder Cores
Manufacturer Magnetics Inc.

Part No.	MPL cm	W_{tfe} grams	W_{tcu} grams	MLT cm	A_c cm^2	W_a cm^2	A_p cm^4	K_g cm^5	A_t cm^2	Perm	AL
KM-77716	12.730	132.000	169.420	6.218	1.244	7.6621	9.53001	0.762526	130.473	60	73
KM-77720	12.730	132.000	169.420	6.218	1.244	7.6621	9.53001	0.762526	130.473	75	91
KM-77719	12.730	132.000	169.420	6.218	1.244	7.6621	9.53001	(?.762526	130.473	90	109
KM-77715	12.730	132.000	169.420	6.218	1.244	7.6621	9.53001	0.762526	130.473	125	152
KM-77439	10.740	131.400	103.180	6.624	1.9772	4.3803	8.66085	1.034038	110.062	60	135
KM-77443	10.740	131.400	103.180	6.624	1.9772	4.3803	8.66085	1.034038	110.062	75	169
KM-77442	10.740	131.400	103.180	6.624	1.9772	4.3803	8.66085	1.034038	110.062	90	202
KM-77438	10.740	131.400	103.180	6.624	1.9772	4.3803	8.66085	1.034038	110.062	125	281
KM-7711O	14.300	127.000	233.470	6.807	1.463	9.6448	14.10867	1.212742	161.936	60	75
KM-77214	14.300	127.000	233.470	6.807	1.463	9.6448	14.10867	1.212742	161.936	75	94
KM-77213	14.300	127.000	233.470	6.807	1.463	9.6448	14.10867	1.212742	161.936	90	112
KM-77109	14.300	127.000	233.470	6.807	1.463	9.6448	14.10867	1.212742	161.936	125	156

Table 6.3 Kool Mμ Toroidal Powder Core Data (cont.)

Core Loss Curves
for
Magnetics Kool Mμ Powder Core 60/125 Perm

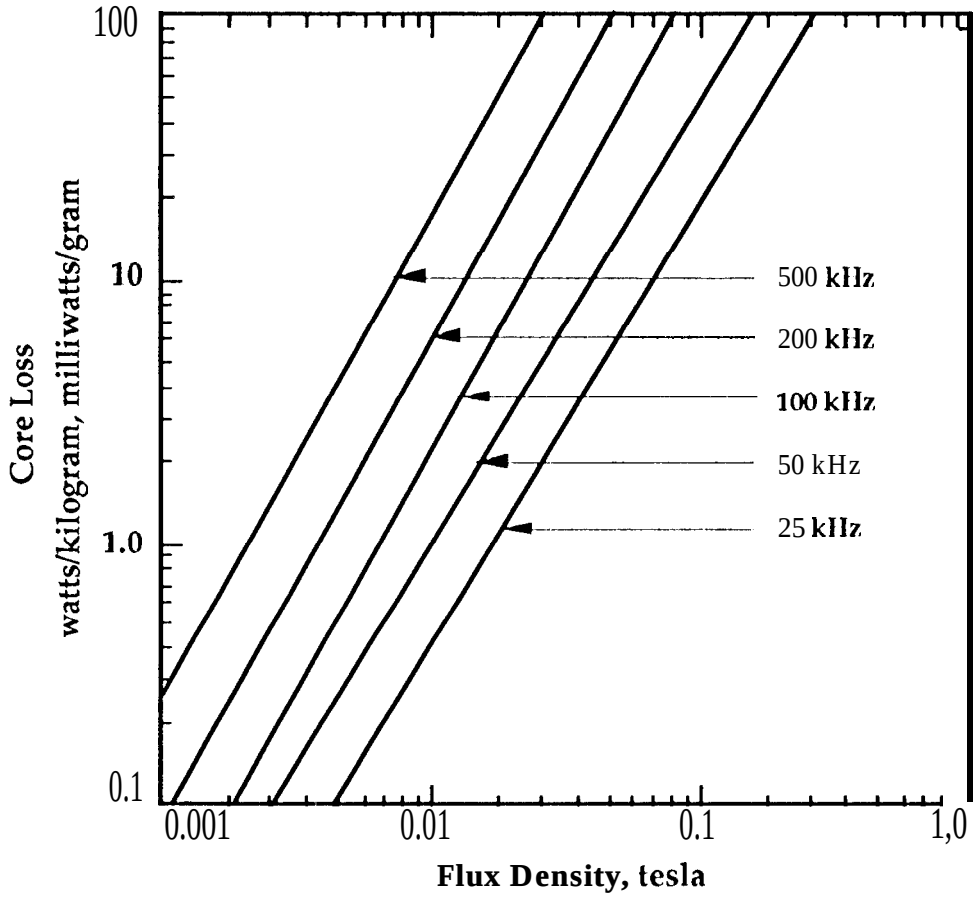

Figure 6.9 Magnetics Kool Mμ powder core GO/125 perm loss curves.

Core loss equation:

$$\text{milliwatts per gram} = 7.36\text{x}10^{-4}(f)^{1.468}(B_{ac})^{2.062}$$

f = *Hertz*
B_{ac} = *Tesla*

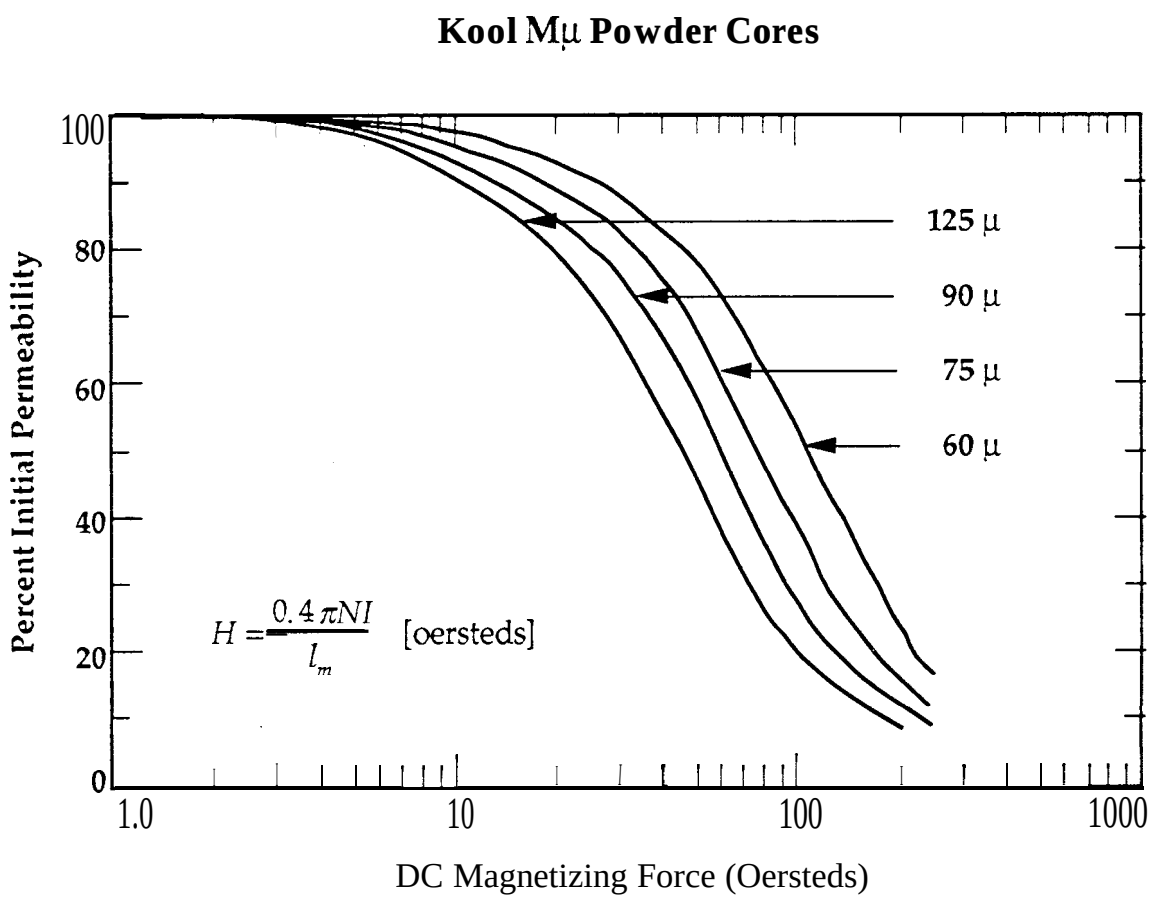

Figure 6.10 Permeability versus dc bias.

Magnetics Nickel-Iron and Kool Mμ Powder Cores Materials

Materials		Molypermalloy	High Flux	Kool Mμ
Inital Permeability	μ_i	125 ±8%	125 ±8%	125 ±8%
Flux Density	B_m	0.7T	1.5T	1.0T
Magnetizing Force (1)	H_m	500	1000	1000
Residual Flux	B_r	0.004T	0.015T	0.007T
Coercivity (2)	H_c	0.3	1.0	0.5
Density (3)	δ	8.50	8.00	6.15

(1) Magnetizing Force, oersted (2) Coercivity, oersted (3) Density, g/cm^3

Table 6.4 Nickel-Iron and Kool Mμ Powder Core Materials Characteristics.

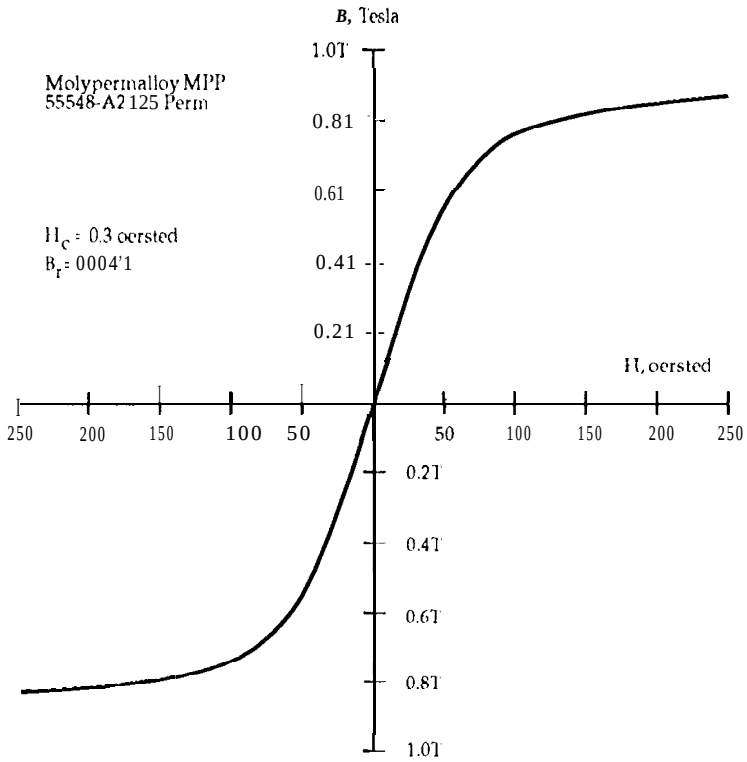

Figure 6.11 Molypermalloy material 125 permeability B-H loop.

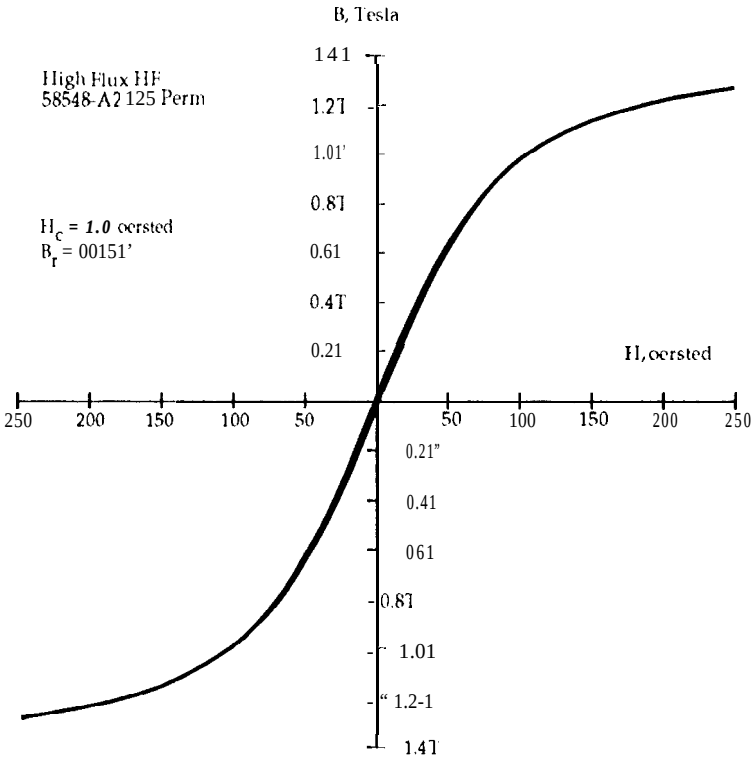

Figure 6.12 High Flux material 125 permeability B-H loop.

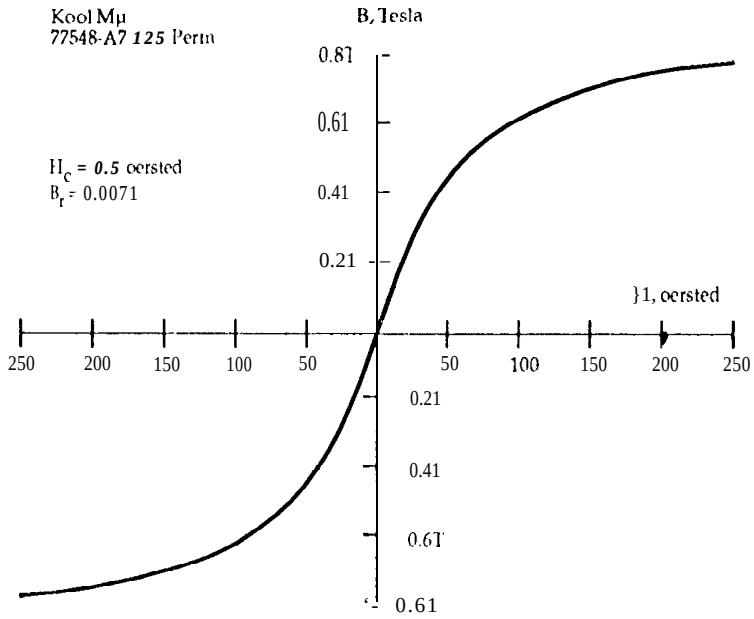

Figure 6.13 KoolMμ material 125 permeability B-H loop.

Engineering Notes

References

1, C. D. Owens, “Stability Characteristics of Molybdenum Permalloy Power Cores,” Magnetism and Magnetic Material, June 14-16, 1955, Pittsburgh, Pa.

2. Magnetics, "Powder Cores MPP and High Flux Cores”, (Catalog MPP-303X), Div. of Spang CO.

3. Magnetics, "Kool Mμ Powder Cores”, (Catalog KMC-02), Div. of Spang Co.

4. Colonel McLyman, “Magnetic Core Conversion”, KG Magnetics Inc. San Marine, Ca. (Software)

Chapter 7

Special Mag-Amp Cores

Nickel-Iron Tape and Amorphous Tape

1. Introduction to Nickel-Iron Tape Cores. 366
2. Nickel-Iron Tape Core Manufacturers. 367
3. Information about Core Data Tables 368
4. Nickel-Iron Core Data Tables.
   - Nickel-Iron 0.5 mil 369
   - Nickel-Iron l, 0 mil 370
   - Nickel-Iron 2. 0 mil 371
5. Special Mag-Amp Toroidal Tape Core I)ata Tables,
   - Permalloy 0.5 mil 372
   - Permalloy 1.0 mi 372
   - Amorphous 1.0 mil l 372
6. Nickel-IronCore Loss Curves
   - Permalloy 0.5 roil 373
   - Permalloy 1.0 mil . . . ...<..... 374
   - Permalloy 2.0 mi 375
   - Orthonol 1.0 mi 376
   - Orthonol 2.0 mil 377
   - Supermalloy 1.0 mi 378
   - Supermalloy 2.0 mil 379
7. Nickel-Iron and Amorophous ape Core Materials Charactersistics . . . . . .
   - Square Permalloy 80 DC Hysteresis Loop 381
   - 1.0 mil Permalloy 80 100kHz hysteresis Loop... 381
   - 0.5 mil Permalloy 80 100kHz Hysteresis Loop 382
   - 1.0 mil Metglas 2714A 100kHz hysteresis Loop. 382
8. References 383

introduction to Thin Tape Nickel Alloys

High permeability metal alloys are based primarily on the nickel-iron system. Although nickel-iron alloys were investigated as early 1889 by Hopkinson, it was not until the studies by Elmen, starting in about 1913, on properties in weak magnetic fields and effects of heat-treatments, that the importance of the Ni-Fe alloys was realized. Elmen called his Ni-Fe alloys "Permalloys" and his first patent was filed in 1916. His preferred composition was the 78 Ni-Fe alloy. Yensen started an independent investigation shortly after Elmen which resulted in the 50Ni-50Fe alloy "Hipernik," which has lower permeability and resistivity but higher saturation than the 78-Permalloy 1.5 tesla compared to 0.75 tesla, making it more useful in powder equipment.

Improvements in the Ni-Fe alloys were achieved by high temperature anneals in hydrogen atmostphere, as first reported by Yensen. The next improvement was done by using grain oriented material and annealing in a magnetic field also in a hydrogen atmosphere; this work was done by Kelsall and Bozorth. Using these two methods, a new material, called Superalloy, was achieved. It has higher permeability, lower coercive force and about the same flux density as 78-Permalloy. Perhaps the most important of these factors is the magnetic anneal which not only increases permeability but also provides a "square" magnetization curve important in high frequency power conversion equipment.

In order to obtain high resistance and therefore lower core losses for high frequency applications, two approaches have been followed, (1) modification of the shape of metallic alloys and (2) development of magnetic oxides. This resulted in the development of thin tapes and powdered alloys in the 1920's and thin films in the 1950's. This development of the thin film has been spurred by the requirements of aerospace power conversion electronics from the mid 1960 to the present.

The Ni-Fe alloys are available in thicknesses of 2 mil, 1 roil, 0.5 roil, 0.25 and 0.125 roil. The material comes with a round or square B-H loop. This gives the engineer a wide range of sizes and configurations from which to select for his/her design.

Nickel-Iron Tape Core Manufacturers

Engineering Notes

Magnetics Inc.
900 East Butler Road
P.O. 130x 391
Butler, Pennsylvania 16003
Phone (412) 282-8282
FAX (412) 282-6955

Rep. No._____ _____

Arnold Engineering Co.
300 North West Street
Marengo, Illinois 60152
Phone (815) 568-2(IOO
FAX (815) 568-2228

Rep. No____ _____ ..-

National Magnetics Corp.
17030 Muskrat Ave.
Adelanto, California 92301
Phone (619) 246-3020
FAX (619) 246-3870

Rep. No._____ _____

Magnetic Metals Corp.
14042 Willow Lane
Westminster, California 92683
Phone (714) 892-6627
FAX (714) 897-4064

Rep. No_____

Information about the Core Data Tables

[1] Part Number

The part number used is close approximation of the manufacturers part number.

[2] MPL

The MPL is the mean magnetic path length in centimeters.

[3] G Dimension

The G dimension is the overall core winding length for bobbin cores in centimeters.

[4] W_{tfe}

This is the total weight of the core in grams.

[5] W_{tcu}

This is the total weight in grams of the copper using a window utilization Ku of 0.4.

[6] MLT

The MLT is the mean length turn in centimeters.

[7] AC

This is the minimum cross section of the core in square centimeters,

[8] W_a

The is the total window area of the core in square centimeters,

[9] A_p

The area product A_p is the core area A_c times the window area W_a in centimeters 4th.

[10] Kg

The core geometry Kg is in centimeters 5th.

[11] At

This is the overall surface area At of the magnetic component in square centimeters.

[12] Perm

Perm is the permeability of the magnetic material such as (2500p).

[13] A_L

A_L is the millihenrys per 1000 turns.

Tape Toroidal Cores 0.5 mil
Manufacturer Magnetics Inc.

Part No.	MPL cm	'tfe grams	W_{tcu} grams	MLT cm	AC cm^2	W_a cm^2	A_p cm^4	K_g cm^5	A_t cm^2
T52402-5	3.244	0.310	3.060	2.093	0.0127	0.4116	0.005228	0.0000127	9.925
T52153-5	3.492	0.670	3.240	2.215	0.0252	0.4116	0.010374	0.0000472	11.327
T52056-5	4.489	0.860	7.480	2.469	0.0252	0.8519	0.021468	0.0000$77	16.999
T52000-5	4.988	1.920	8.250	2.723	0.0504	0.8519	0.042937	0.0003179	20.807
T52002-5	6.185	2.380	17.110	3.028	0.0504	1.5892	0.080103	0.0005334	29.891
T52076-5	6.484	5.630	17.360	3.495	0.1137	1.3968	0.158828	0.0020669	34.853
T52061-5	6.983	5.370	28.990	3.749	0.1008	2.1742	0.219171	0.0023573	40.555
T52106-5	7.482	6.490	28.910	3.739	0.1137	2.1742	0.247225	0.0030375	44.230
T52007-5	6.484	7.480	18.670	3.759	0.1512	1.3968	0.211208	0.0033983	36.655
T52004-5	8.978	6.910	62.290	4.267	0.1008	4.1049	0.413796	0.0039101	62.512
T52168-5	6.983	8.050	32.910	4.257	0.1512	2.1742	0.328757	0.0046709	44.146
T52029-5	9.477	10.930	66.000	4.521	0.1512	4.1049	0.620694	0.0083035	69.345

Table 7.1 Tape Toroidal Cores 0.5 mil

Tape Toroidal Cores 1.0 mil
Manufacturer Magnetics Inc.

Part No.	MPL cm	t_{fe} grams	t_{cu} grams	MLT cm	AC cm^2	W_a cm^2	A_p cm^4	K_g cm^5	A_t cm^2
T52402-1	3.244	0.470	3.060	2.093	0.0191	0.4116	0.007842	0.0030286	9.925
T52153-1	3.492	1.010	3.240	2.215	0.0378	0.4116	0.015560	0.0001062	11.327
T52056-1	4.489	1.290	7.480	2.469	0.0378	0.8519	0.032203	0.0001972	16.999
T52000-1	4.988	2.880	8.250	2.723	0.0756	0.8519	0.064406	0.0007153	20.807
T52002-1	6.185	3.570	17.110	3.028	0.0756	1.5892	0.120154	0.0012002	29.891
T52076-1	6.484	8.440	17.360	3.495	0.1706	1.3968	0.238243	0.0046507	34.853
T52061-1	6.983	8.060	28.990	3.749	0.1512	2.1742	0.328757	0.0053039	40.555
T52106-1	7.482	9.740	28.910	3.739	0.1706	2.1742	0.370837	0.0067669	44.230
T52007-1	6.484	11.220	18.670	3.759	0.2268	1.3968	0.316812	0.0076460	36.655
T52004-1	8.978	10.360	62.290	4.267	0.1512	4.1049	0.620694	0.0087978	62.512
T52168-1	6.893	12.080	32.910	4.257	0.2268	2.1742	0.493135	0.0105096	44.146
T52029-1	9.477	16.440	66.000	4.521	0.2268	4.1049	0.931041	0.0186829	69.345

Table 7.2 Tape Toroidal Cores 1.0 mil

Tape Toroidal Cores 2.0 mil
Manufacturer Magnetics Inc.

Part No.	MPL cm	‘tfe grams	W_{tcu} grams	MLT cm	A_c cm	W_a ^{2} cm	A_p ^{2} cm	K_g ^{4} cm^5	A_t cm^2
T52402-2	3.244	0.530	3.060	2.093	0.0216	0.4116	0.008888	0.0000367	9.925
T52153-2	3.492	1.140	3.240	2.215	0.0428	0.4116	0.017635	0.0031365	11.327
T52056-2	4.489	1.470	7.480	2.469	0.0428	0.8519	0.036497	0.0002533	16.999
T52000-2	4.988	3.260	8.250	2.723	0.0857	0.8519	0.072994	0.0009188	20.807
T52002-2	6.185	4.040	17.110	3.028	0.0857	1.5892	0.136175	0.0015415	29.891
T52076-2	6.484	9.560	17.3643	3.495	0.1933	1.3968	0.270009	0.0059735	34.853
T52061-2	6.983	9.130	28.990	3.749	0.1714	2.1742	0.372591	0.0068124	40.555
T52106-2	7.482	11.040	28.910	3.739	0.1933	2.1742	0.420282	0.00$6917	44.230
T52007-2	6.484	12.720	18.670	3.759	0.2571	1.3968	0.359054	0.0098209	36.655
T52004-2	8.978	11.740	62.290	4.267	0.1714	4.1049	0.703453	0.0113003	62.512
T52168-2	6.893	13.7(XI	32.910	4.257	0.2571	2.1742	0.558887	0.0134991	44.146
T52029-2	9.477	18.590	66.000	4.521	0.2571	4.1049	1.055179	0.0239972	69.345

Table 7.3 Tape Toroidal Cores 2.0 mil

Special Mag-Amp Toroidal Cores
Manufacturer Magnetics Inc.

Part No.	MPL cm	W_{tfe} grams	W_{tcu} grams	MLT cm	A_c cm^2	W_a cm^2	A_p cm^4	K_g cm^5	A_t cm^2
T50B12-5D	3.492	0.670	3.330	1.971	0.0252	0.471	0.01188	0.0000608	10.446
T50B12-1D	3.492	1.010	3.330	1.971	0.0378	0.471	0.01782	0.0001367	10.446
T50B12-1E	3.492	1.010	3.330	1.971	0.0378	0.471	0.01782	0.0001367	10.446
T50B11-5D	4.489	0.860	7.410	2.225	0.0252	0.937	0.02361	0.0001070	15.951
T50B11-1D	4.489	1.290	7.410	2.225	0.0378	0.937	0.03542	0.0002407	15.951
T50B11-1E	4.489	1.290	7.410	2.225	0.0378	0.937	0.03542	0.0002407	15.951
T50B66-5D	4.988	1.920	8.260	2.479	0.0504	0.937	0.04722	0.0003841	19.572
T50B66-1D	4.988	2.880	8.260	2.479	0.0756	0.937	0.07084	0.0008642	19.572
T50B66-1E	4.988	2.880	8.260	2.479	0.0756	0.937	0.07084	0.0008642	19.572
T50B10-5D	6.185	2.380	16.880	2.784	0.0504	1.705	0.08593	0.0006223	28.453
T50B10-1D	6.185	3.570	16.880	2.784	0.0756	1.705	0.12889	0.0014002	28.453
T50B10-1E	6.185	3.570	16.880	2.784	0.0756	1.705	0.12889	0.0014002	28.453
T50B45-5D	4.988	3.840	9.950	2.987	0.1008	0.937	0.09446	0.0012751	22.195
T50B45-1D	4.988	5.750	9.950	2.987	0.1512	0.937	0.14168	0.0028690	22.195
T50B45-1E	4.988	5.750	9.950	2.987	0.1512	0.937	0.14168	0.0028690	22.195

Table 7.4 Special Mag-Amp Toroidal Core Data

Core Loss Curves
for
Magnetics Ni-Fe Material Perm 80
Tape Thickness 0.5 mil

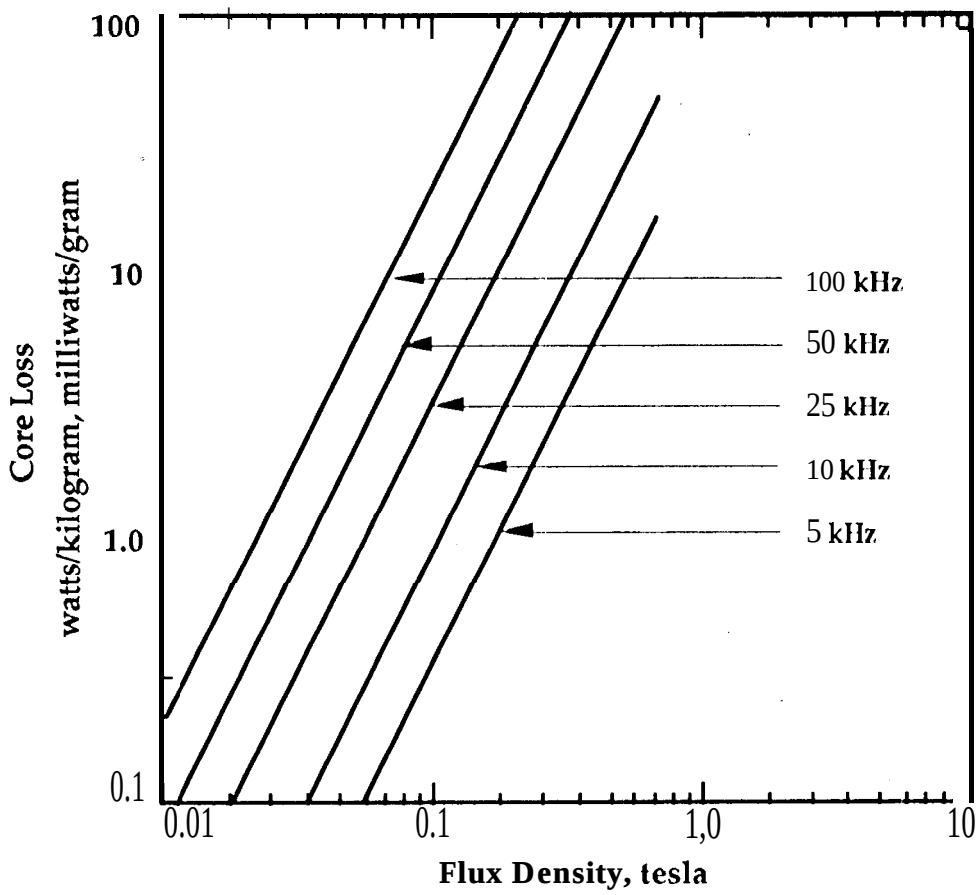

Figure 7.1 Magnetics Ni-Fe 0.5 mil Perm 80 core loss curves.

Core 10ss equation:

$$\text{milliwatts per gram} = 27.3\text{x}10^{-5}(f)^{1.37}(B_{ac})^{1.96}$$

$$f = Hertz$$
$$B_{ac} = Tesla$$

Core Loss Curves
for
Magnetics Ni-Fe Material Perm 80
Tape Thickness 1 mil

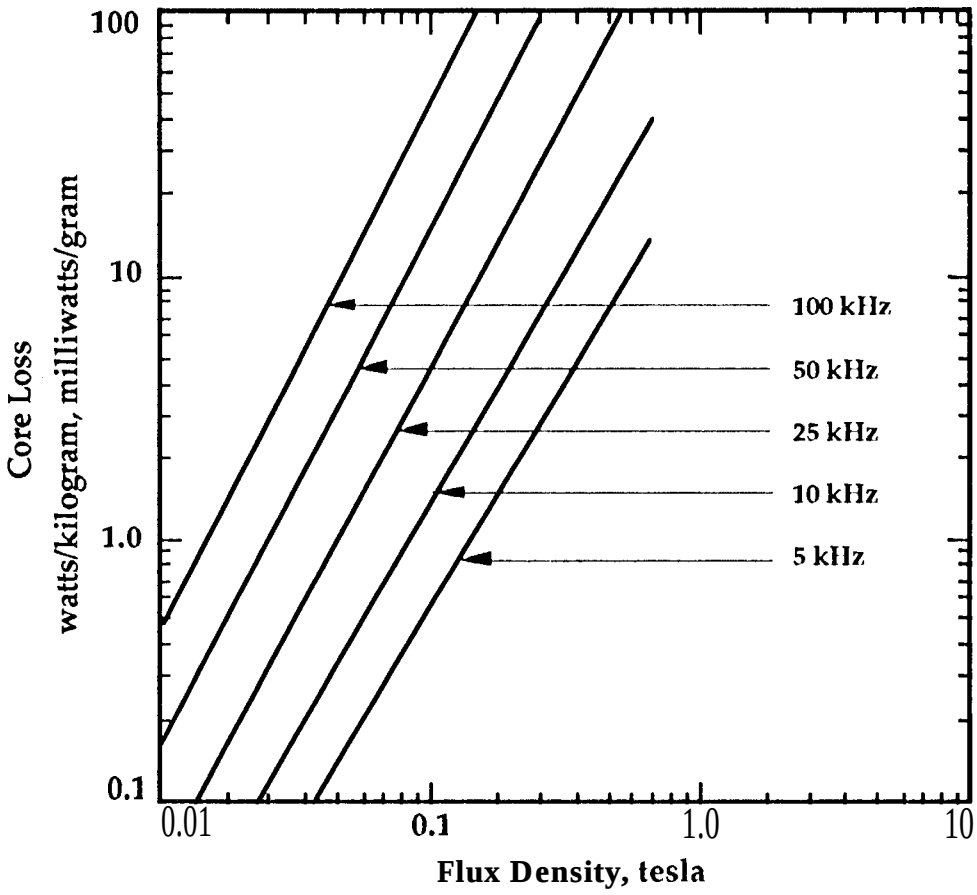

Figure 7.2 Magnetics Ni-Fe 1 mil Perm 80 core loss curves.

Core loss equation:

$$\text{milliwatts per gram} = 77.4\times10^{-6}(f)^{1.5}(B_{ac})^{1.8}$$

f = Hertz
B_{ac} = Tesla

Core Loss Curves
for
Magnetics Ni-Fe Material Perm 80
Tape Thickness 2 mil

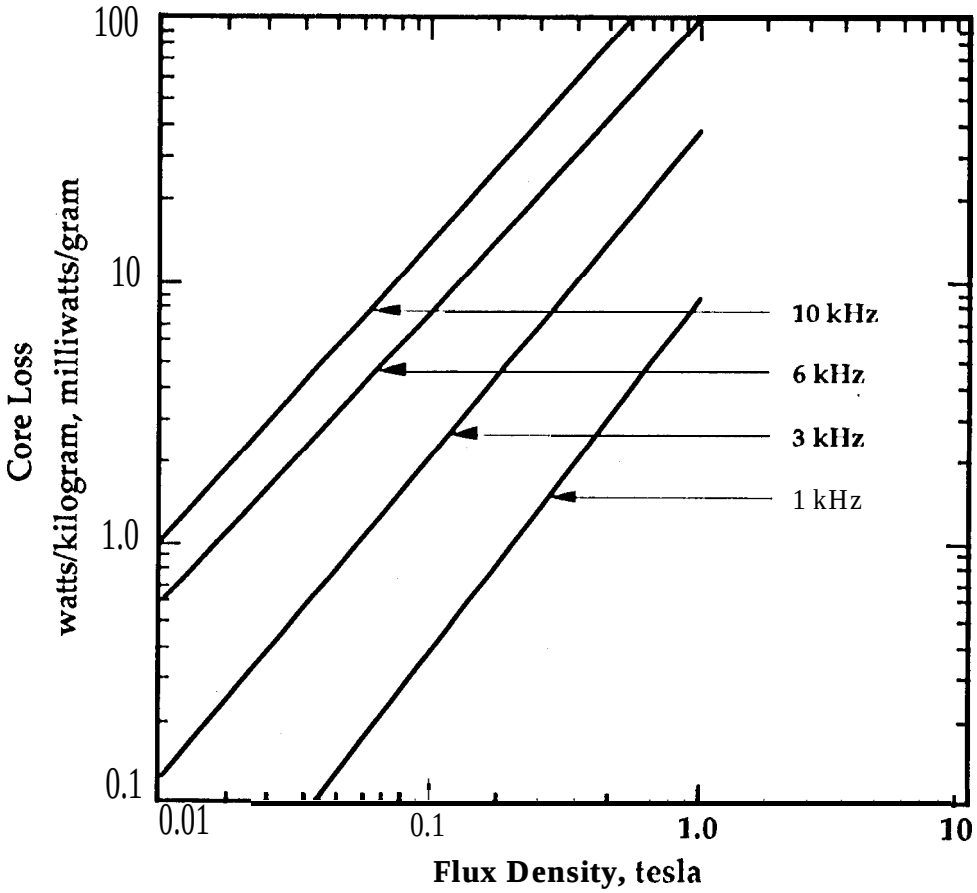

Figure 7,3 Magnetics Ni-Fe 2 rni] Perm 80 core 10ss curves.

Core 10ss equation:

$$\text{milliwatts per gram} = 1.65\text{x}10^{-4}(f)^{1.41}(B_{ac})^{1.77}$$

$$f = Hertz$$
$$B_{ac} = Tesla$$

Core Loss Curves
for
Magnetics **50% Ni-Fe Orthonol Material**
Tape Thickness 1 mil

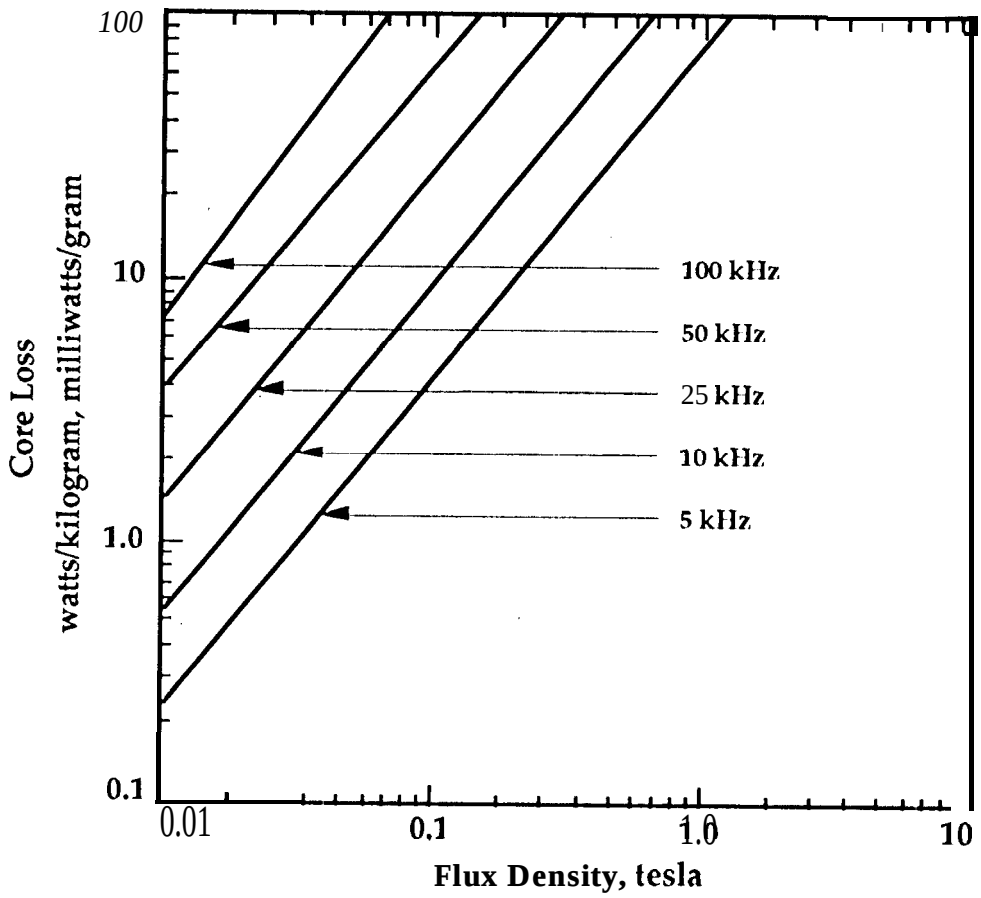

Figure 7,4 Magnetics 50% Ni-Fe 1 mil Orthonol core loss curves.

Core 10ss equation:

$$\text{milliwatts per gram} = 2.81\times10^{-3}(f)^{1.21}(B_{ac})^{1.38}$$

f = *Hertz*
B_{ac} = *Tesla*

Core Loss Curves
for
Magnetics 50% Ni-Fe Orthonol Material
Tape Thickness 2 mil

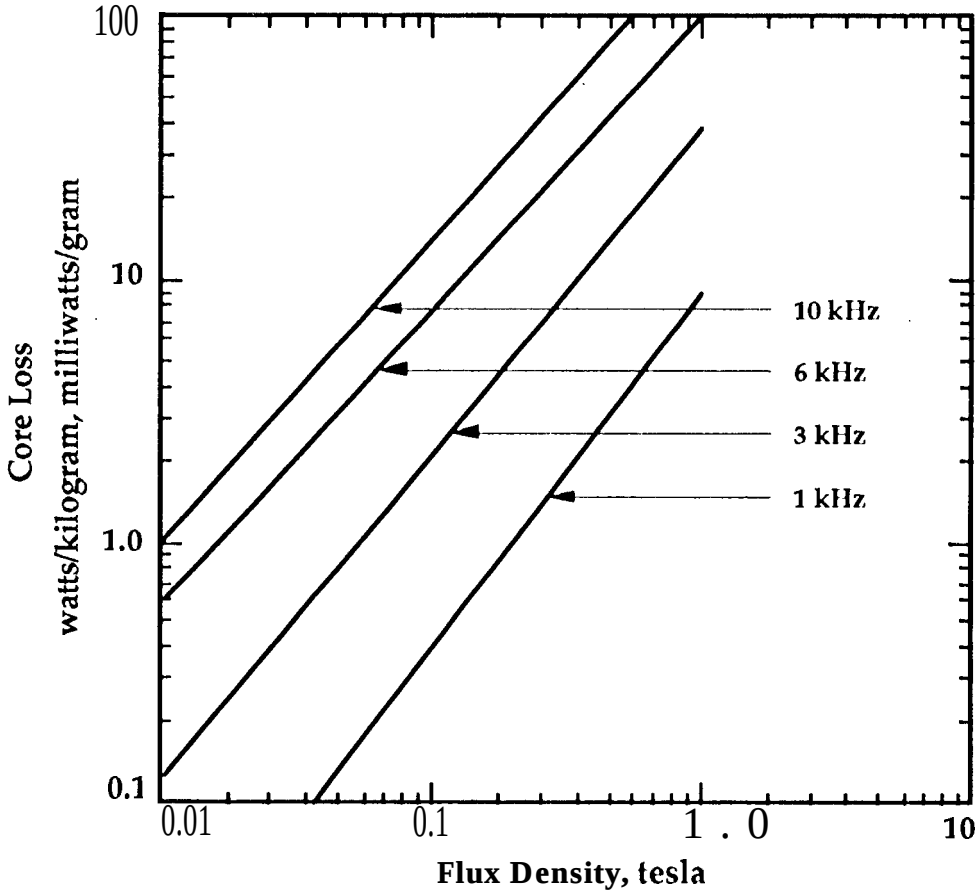

Figure 7.5 Magnetics 50% Ni-Fe 2 r-nil Orthonol core loss curves.

Core 10ss equation:

$$\text{milliwatts per gram} = 5.59\text{x}10^{-4}(f)^{1.41}(B_{ac})^{1.27}$$

f = *Hertz*
B_{ac} = *Tesla*

Core Loss Curves
for
Magnetics 80% **Ni-Fe** Superalloy Material
Tape Thickness **1** mil

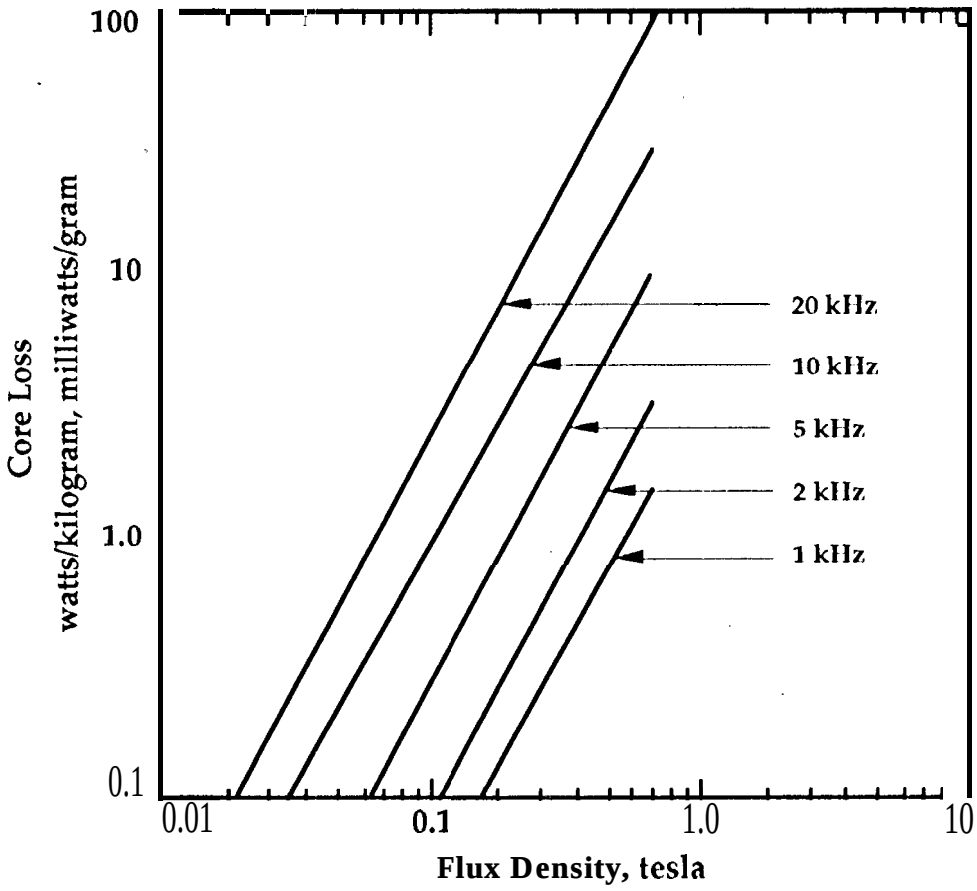

Figure 7.6 Magnetics 80% Ni-Fe 1 mil Supermalloy core loss curves.

Core 10ss equation:

$$\text{milliwatts per gram} = 2.46\text{x}10^{-4}(f)^{1.35}(B_{ac})^{1.91}$$

$$f = Hertz$$
$$B_{ac} = Tesla$$

Core Loss Curves
for
Magnetics 80% Ni-Fe Superalloy Material
Tape Thickness 2 mil

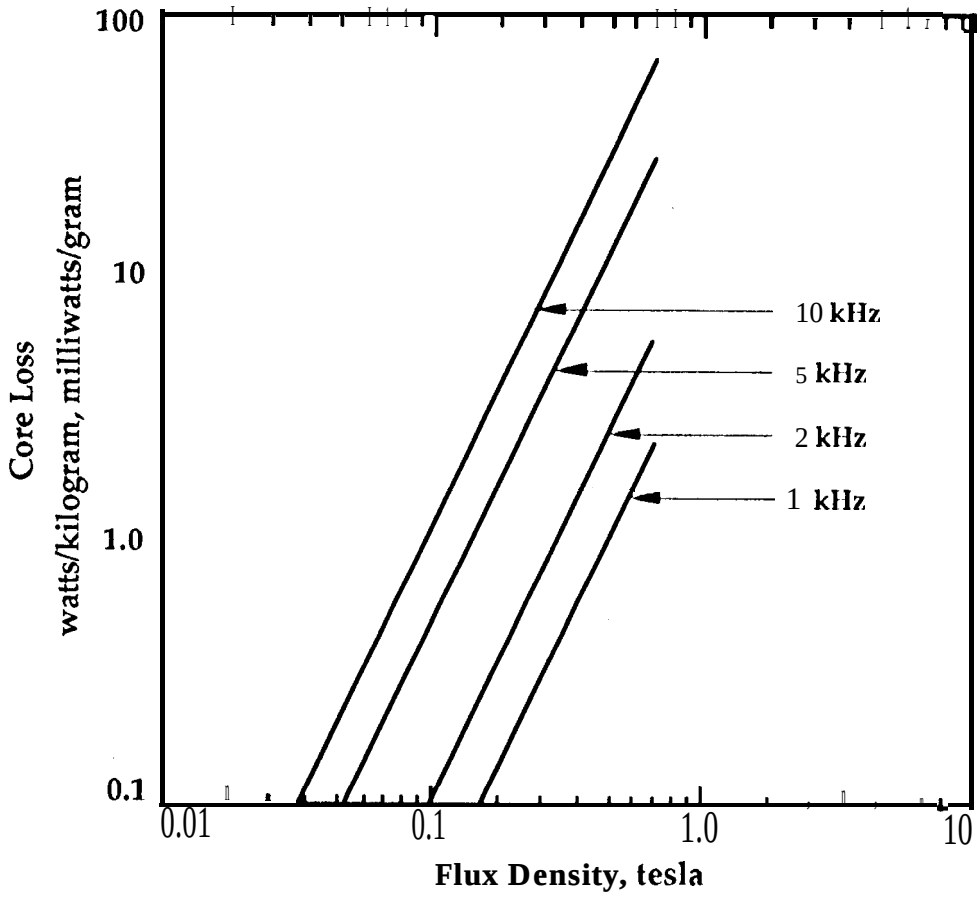

Figure 7.7 Magnetics 80% Ni-Fe 2 mil Supermalloy core loss curves.

Core 10ss equation:

$$\text{milliwatts per gram} = 1.79\text{x}10^{-4}(f)^{1.48}(B_{ac})^{2.15}$$

$$f = Hertz$$
$$B_{ac} = Tesla$$

Table 7.5 Nickel-Iron & Amorophous Tape Core Materials Charactersistics.

Magnetics Inc. Nickel-Iron & Amorphous Tape Core Materials

Materials (1)		(5) F	D	A	B	E
Curie Temperature	“c	>370	>370	>5C0	>370	>205
Flux Density	B_m	0.65-O.82T	0.66-0.82T	1.42-1.58T	1.5-1.6T	0.5-.65T
Squareness Ratio	B_r/B_m	.4-.7	>0.8	>0.9	>0.9	>0.9
Coercivity (2)	H_c	.003-.008	.02-.04	.1-.2	.03-.08	008-.02
Resistivity (3)	p	57	57	45	135	140
Density (4)	δ	8.7	8.7	8.2	7.32	7.59

(1) Toroidal, core data (2) Coercivity, dc oersted (3) Resistivity, μΩ -cm (4) Density, g/cm ^{3}

(5) F is Supermalloy, D is Sq. Permalloy, A is Orthonol, B is Metglas 2605SC, E is Metglas 2714A

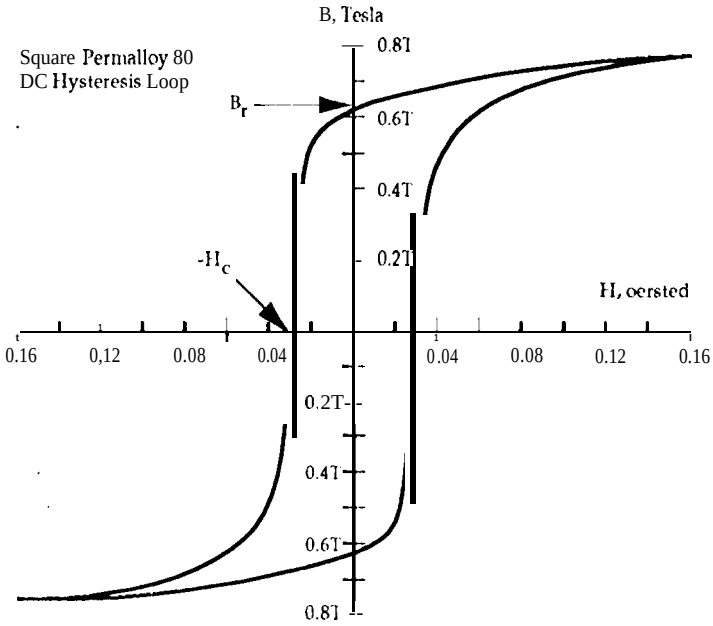

Figure 7.8 Square Permalloy 80 DC hysteresis loop.

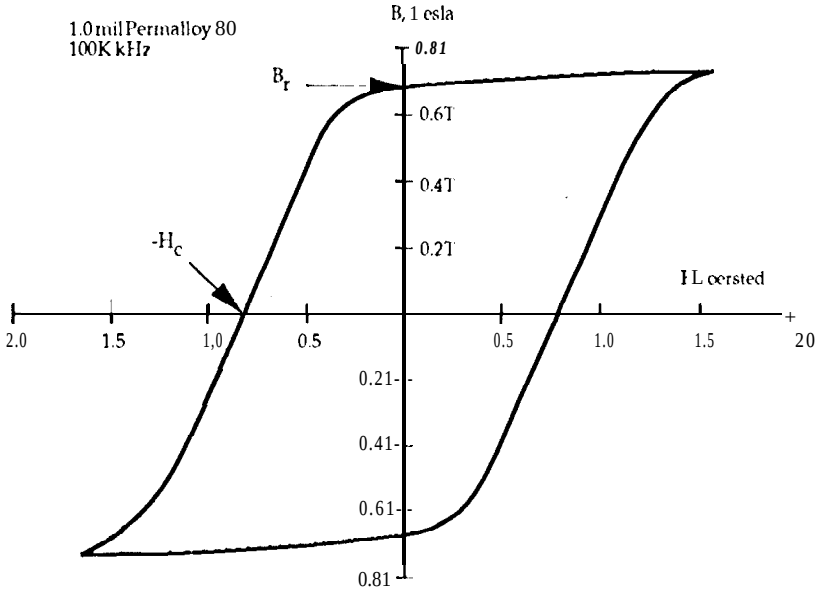

Figure 7.91,0 mil Permalloy 80100kHz hysteresis loop.

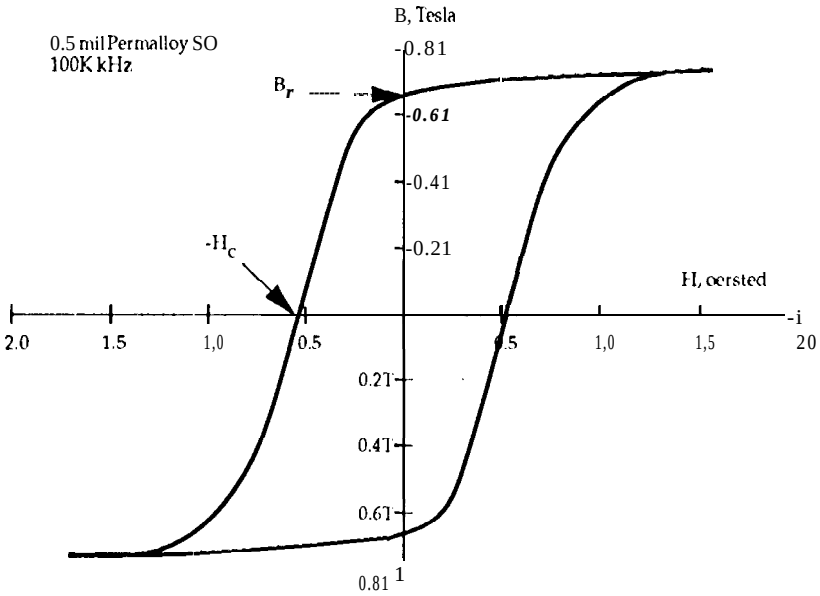

Figure 7.100.5 mil Permalloy 80 100kHz hysteresis loop.

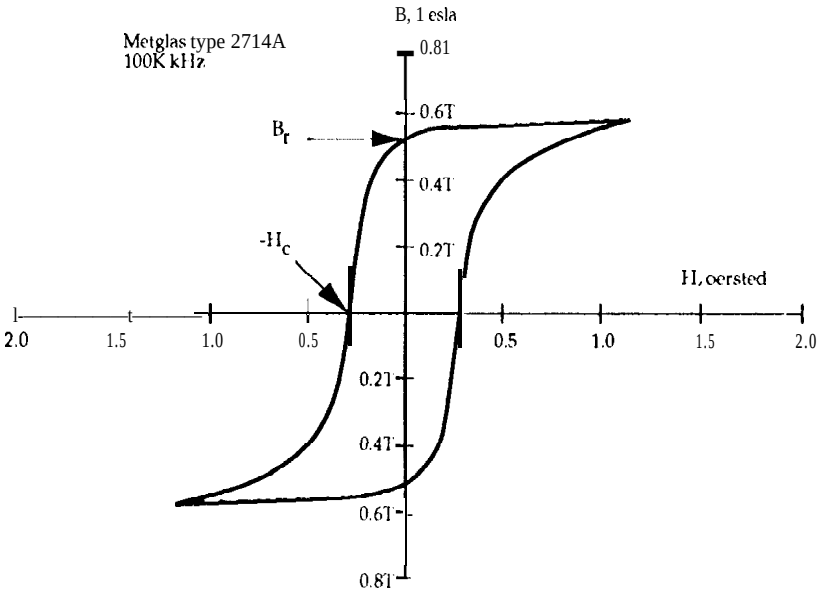

Figure 7.11 Metglas 2714A 100kHz hysteresis loop.

References

1. Magnetics, "Design Manual featuring Tape Wound Cores,", (Catalog TWC-300U) Div. of Spang & Company.
2. Arnold Engineering Co. "Tape Wound Cores," (Catatlog TC-101 B) Marengo Illinois.
3. Colonel McLyman, "Magnetic Core Conversion", KG Magnetics Inc. San Marine, Ca. (Software)

Engineering Notes

Chapter 8

Amorphous (Metglas®) Tape Cores

1. Introduction to Amorphous Tape Cores 386
2. Amorphous Tape Core Manufacturers 387
3. Information about Core Data Tables 388
4. Amorphous Core Data Tables.
   - Tape Toroidal Core 1.0 mil 389
   - Gapped Tape Toroial Cores 1.0 mil 390
5. Amorphous Core Loss Curves.
   - Metglas Type 2714A 391
   - Metglas Type 2605SC 392
   - Metglas Type 2605TCA 393
6. Amorophous Tape Core Materials Characteristics. 394
   - Metglas Type 2605TCA DC Hysteresis Loop. 395
   - Metglas Type 2605SC DC Hysteresis Loop. 395
   - Metglas Type 2714A DC Hysteresis Loop. 396
   - Metglas Type 2705MF DC Hysteresis Loop 396
7. References 397

Introduction to Metallic Glass

The first synthesis of a metallic glass that drew wide attention among material scientists occurred in 1960. Klement, Willens and Duwez reported that a liquid AuSi alloy, when rapidly quenched to liquid nitrogen temperature, would form an amorphous solid. It was twelve years later that Chen and Polk produced ferrous-based metallic glasses in useful shapes with significant ductility. Metallic glasses have since survived the transition from laboratory curiosities to useful products, and are currently the focus of intensive technological and fundamental studies.

Metallic glasses are generally produced by liquid quenching in which a molten metal alloy is rapidly cooled (at rates on the order of 10^5 degrees/see.) through the temperature at which crystallization normally occurs. The basic difference between crystalline (standard magnetic material) and glassy metals is in their atomic structures. Crystalline metals are composed of regular, three dimensional arrays of atoms which exhibit long-range order. Metallic glasses do not have long-range structural order. Despite their structural differences, crystalline and glassy metals of the same compositions exhibit nearly the same densities.

The electrical resistivities of metallic glasses are much larger (up to three times higher) than those of crystalline metals of similar compositions. The magnitude of the electrical resistivities and their temperature coefficients in the glassy and liquid states are almost identical.

Metallic glasses are quite soft magnetically. The term "soft" refers to a large response of the magnetization to a small applied field. A large magnetic response is desirable in such applications as transformers and inductors. The obvious advantages of these new materials are in high frequency applications with their high induction, high permeability and low core loss.

There are three materials that have been used in high frequency applications: Metglas* 2605SC, Metglas 2714A and Metglass 2605TCA. Material 2605SC offers a unique combination of high resistivity, high saturation induction, and very low core loss making it suitable for designing high frequency dc inductors. Material 2714A offers a unique combination of high resistivity, high squareness ratio B_r/B_s, and very low core loss making it suitable for designing high frequency transformers and mag-amps.

*Metglas is Allied-Signals, inc. registered trademark for amorphous alloys of metals,

Amorphous Tape Core Manufacturers

Engineering Notes

Allied Signaling. .
Metglas Products
6 Eastmans Road
Parsippany, New Jersey 07054
Phone (201) 581-7654
FAX (201) 581-7717

Rep. No._. . _____

Magnetics Inc.
900 East Butler Road
1'.0. Box 391
Butler, Pennsylvania 16003
Phone (412) 282-8282
FAX (412) 282-6955

Rep, No._____ __

Arnold Engineering Co.
300 North West Street
Marengo, Illinois 60152
Phone (815) 568-2000
FAX (815) 568-2228

Rep. No._ . . . . .._ _____

National Magnetics Corp.
17030 Muskrat Ave.
Adelanto, California 92301
Phone (619) 246-3020
FAX (619) 246-3870

Rep. No. _–_____

Magnetic Metals Corp.
14042 Willow Lane
Westminster, California 92683
Phone (714) 892-6627
FAX (714) 897-4064

Rep. No.__ . . . .._._.__. _____ _._. . . .

Toshiba
Advanced Materials Div.
112 Turnpike Road
Westboro, Maryland 01581
Phone (508) 836-3939
FAX (508) 836-3969

Rep. No._____ _–.——.

Information about the Core Data Tables

[1] **Part Number**

The part number used is close approximation of the manufacturers part number.

[2] MPL

The MPL is the mean magnetic path length in centimeters.

[3] G Dimension

. The G dimension is the overall core winding length for bobbin cores in centimeters.

[4] **W_{tfe}**

This is the total weight of the core in grams.

[5] **W_{tcu}**

This is the total weight in grams of the copper using a window utilization Ku of 0.4.

[6] **MLT**

The MLT is the mean length turn in centimeters.

[7] A_c

This is the minimum cross section of the core in square centimeters.

[8] Wa

The is the total window area of the core in square centimeters.

[9] **A_p**

The area product A_p is the core area A_c times the window area W_a in centimeters 4th.

[10] Kg

The core geometry Kg is in centimeters 5th.

[11] At

This is the overall surface area At of the magnetic component in square centimeters.

[12] Perm

Perm is the permeability of the magnetic material such as (2500p).

[13] **A_L**

A_L is the millihenrys per 1000 turns.

Tape Toroidal Cores 1.0 mil
Manufacturer Allied-Signal, Inc.

Part No.	MPL cm	'tfe grams	W_{tcu} grams	MLT cm	AC cm^2	W_a cm	A_p cm^4	K_g cm^5	A_t cm^2
AMP1303	3.503	1.10	3.46	1.984	0.0413	0.4902	0.02025	0.0001686	10.667
AMP1603	4.497	1.40	7.71	2.240	0.0410	0.9678	0.03967	0.0002904	16.277
AMP1305	3.463	1.50	3.85	2.208	0.0571	0.4902	0.02799	0.0002895	11.351
AMP1903	5.003	3.11	8.59	2.496	0.0817	0.9678	0.07907	0.0010353	19.957
AMP2303	6.188	3.80	16.77	2.816	0.0810	1.6744	0.13562	0.0015604	28.841
AMP1805	4.884	4.01	8.91	2.736	0.1081	0.9162	0.09904	0.0015709	20.764
AMP1906	4.997	6.11	9.75	3.048	0.1613	0.8993	0.14505	0.00307(34	22.736
AMP251O	7.010	12.82	33.19	4.112	0.2407	2.2701	0.54641	0.0127939	43.607

Table 8.1 Amorphous Tape Toroidal Cores 1.0 mil

Gapped Toroidal Tape Cores 1.0 mil
Manufacturer Allied-Signal, Inc.

Part No.	MPL cm	W_{tfe} grams	W_{tcu} grams	MLT cm	A_c cm^2	W_a cm^2	A_p cm^4	K_g cm^5	A_t cm^2	A_L
AMP1305G	3.299	2.60	2.18	2.39°	0.1070	0.2661	0.02847	0.0005098	11.249	62
AMP1505G	3.770	3.60	3.21	2.55°	0.1300	0.3537	0.04598	0.0009376	13.920	72
AMP1810G	4.713	8.00	9.45	3.590	0.2360	0.7406	0.17478	0.0045959	23.614	111
AMP2510G	7.305	7.32	42.77	4.150	0.1400	2.8987	0.40581	0.0054760	46.479	94
AMP2110G	5.577	10.37	15.95	3.829	0.2580	1.1711	0.30214	0.0081433	30.574	138
AMP2215G	6.363	12.29	32.74	4.750	0.2700	1.9390	0.52353	0.0119034	42.279	136
AMP2610G	6.598	18.00	22.21	4.230	0.3800	1.4765	0.56107	0.0201614	40.755	131
AMP3710G	9.426	36.00	61.21	5.110	0.5320	3.3690	1.79230	0.0746386	74.048	130

Table 8.2 Gapped Amorphous Tape **Toroidal** Cores 1.0 **mil**

Core Loss Curves
for
Magnetics Material Type 2714A
High Frequency

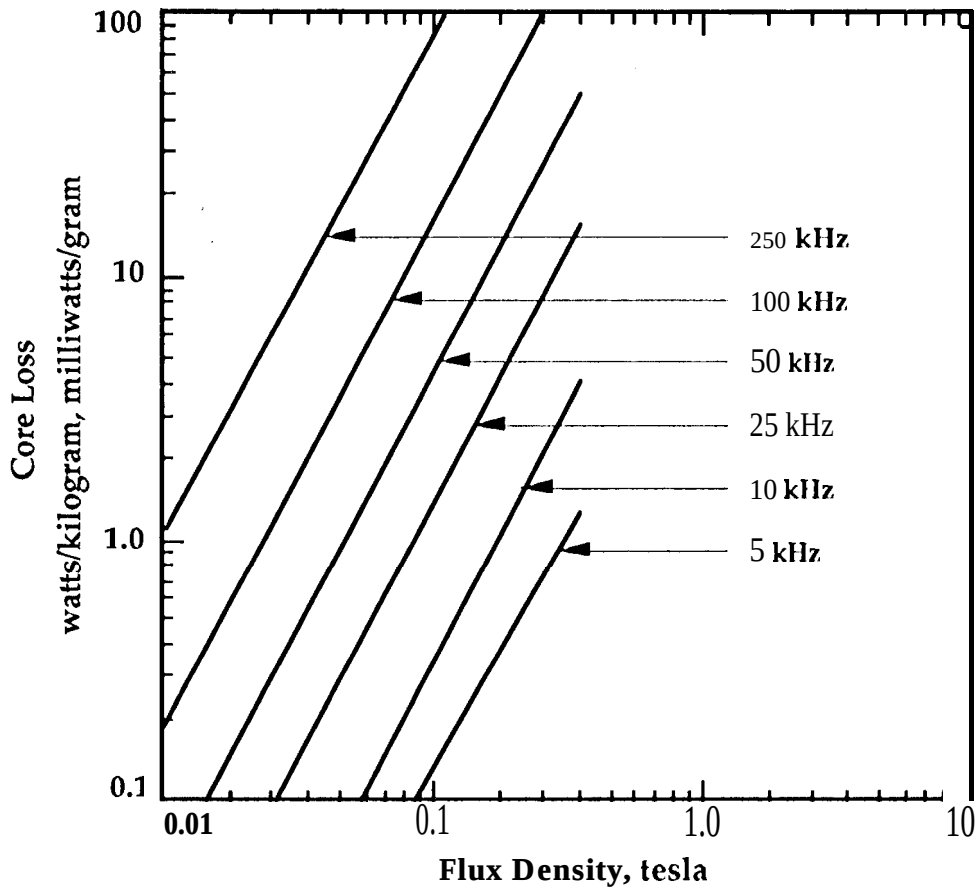

Figure **8.1** Allied Signal Inc. Metglas material type 2714A core loss curves.

Core 10ss equation:

$$\text{milliwatts per gram} = 10.1\times10^{-6}(f)^{1.55}(B_{ac})^{1.67}$$

f = *Hertz*
B_{ac} = *Tesla*

Core Loss Curves
for
Magnetics Metglas Material Type 2605SC
High Flux

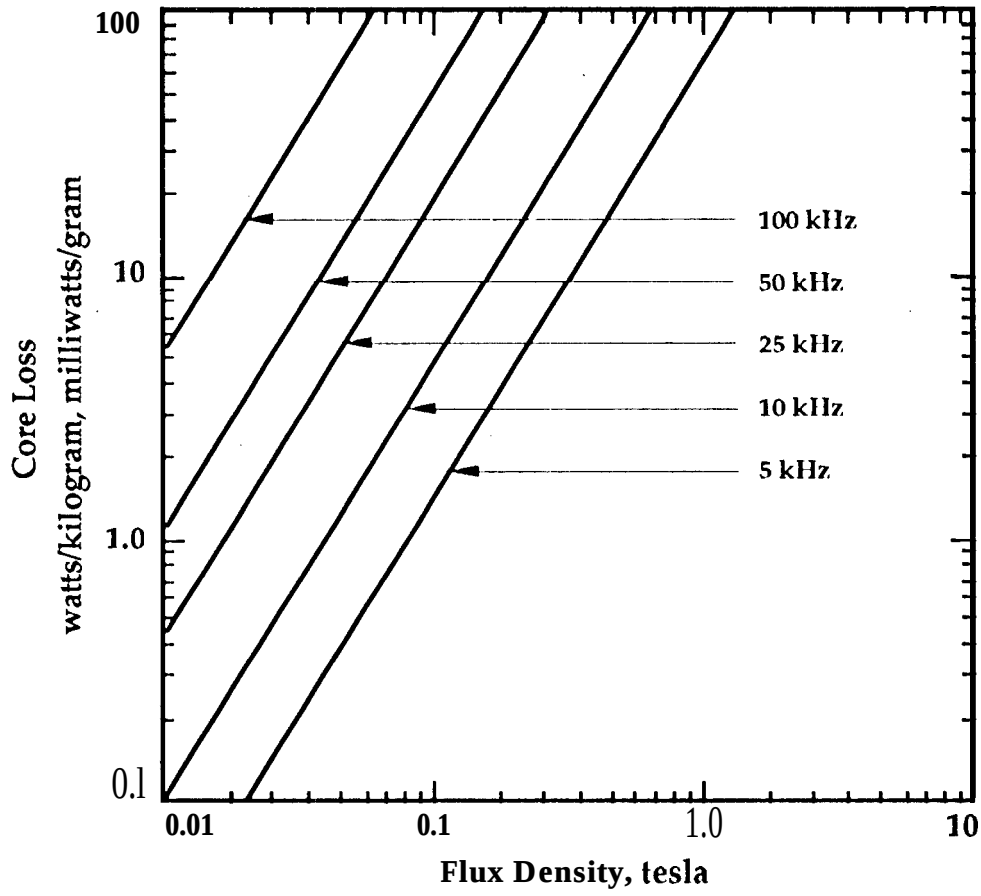

Figure 8.2 Allied Signal Inc. Metglas material type 2605SC core loss curves,

Core 10ss equation:

$$\text{milliwatts per gram} = 8.79\times10^{-6}(f)^{1.73}(B_{ac})^{2.23}$$

f = *Hertz*
B_{ac} = *Tesla*

Core Loss Curves
for
Magnetics Metglas Material Type 2605TCA
High Flux

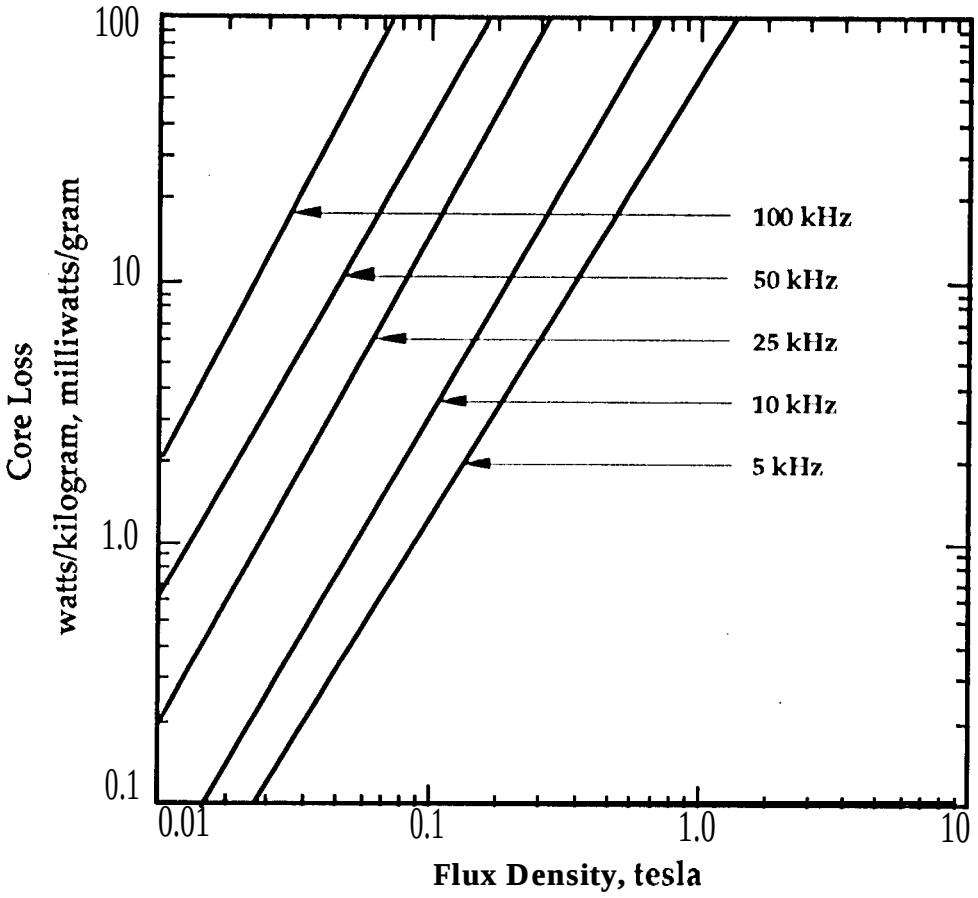

Figure 8.3 Allied Signal Inc. Metglas material type 2605TCA core loss curves.

Core 10ss equation:

$$\text{milliwatts per gram} = 3.608 \times 10\text{-}2\ (f)^{1.129}(B_{ac})^{2.01}$$

f = Hertz
B_{ac} = Tesla

Table 8.3 Amorphous Tape Core Materials Characteristics.

Allied Signal Inc. Metglas Tape Core Materials

Metglas Amorphous Alloys (1)		2714A	2605SC	2605TCA	2705MF
Max dc Permeability	μ_m	1,000,000	300,000	600,000	(5) 3500
Curie Temperature	°C	>225	>370	>415	>365
Flux Density	B_m	0.55T	1.61T	1.56T	0.7T
Squareness Ratio	B_r/B_m	>0.9	>0.9	>0.9	>0.3
Coercivity (2)	H_c	<10	<50	<30	
Resistivity (3)	ρ	142	135	137	136
Density (4)	δ	7.59	7.32	7.18	7.80

(1) Toroidal, core data (2) Coercivity, dc millioersted (3) Resistivity, $\mu\Omega$ - cm (4) Density, g/cm 3

(5) Flat B-H loop annealing for low permeability.

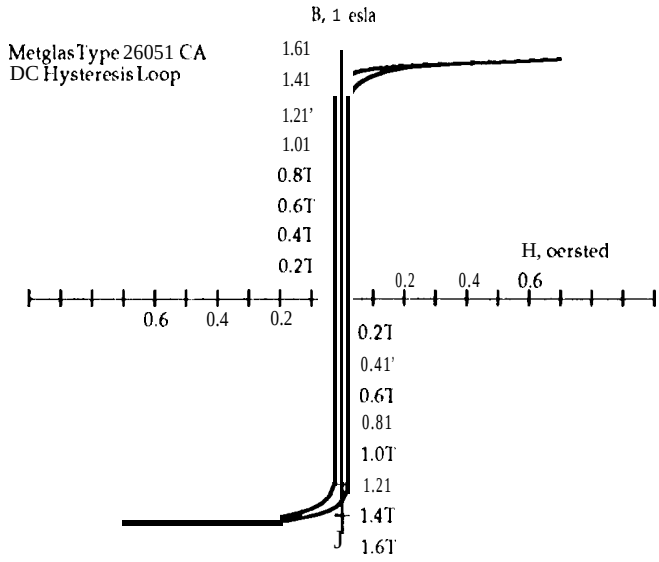

Figure 8.4 Metglas type 2605TCA DC hysteresis loop.

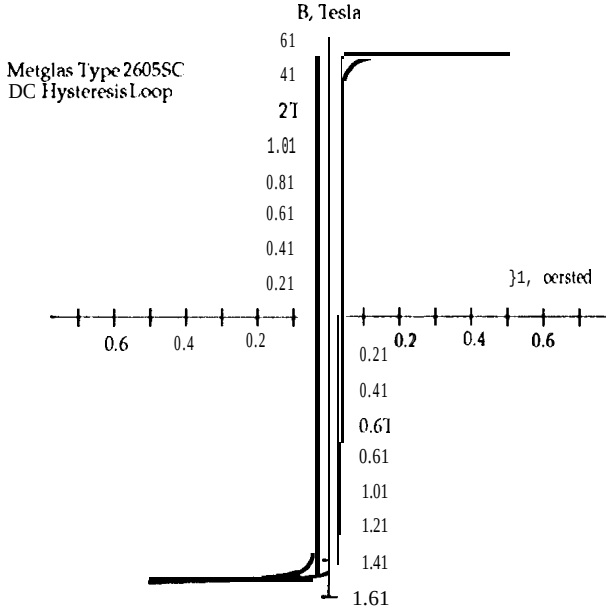

Figure 8.5 Metglas type 2605SC DC hysteresis loop.

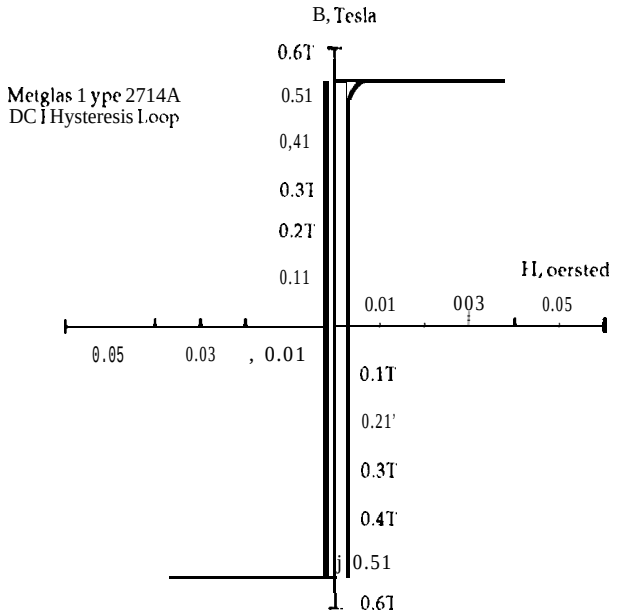

Figure 8.6 Metglas type 2714A DC hysteresis loop.

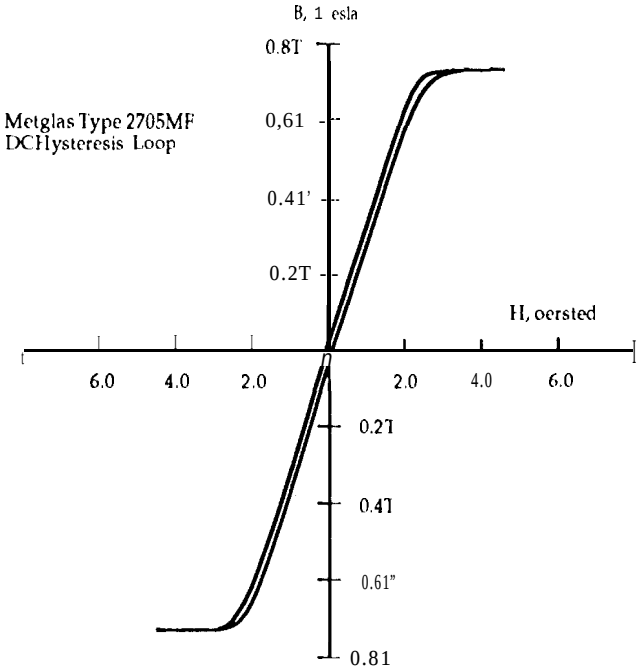

Figure 8.7 Metglas type 2705MF DC hysteresis loop.

References

1. Dave Nathasingh, "A New High-Flux Magnetic Material for High Frequency Applications" Power Concepts Inc. March 25-27,1980, pp 132-1-12.
2. Joseph S. Elias, Design of High Frequency Output Inductors Using Metglas Amorphous Choke Cores", Allied-Signal Inc., Metglas Products, Parsippany, NJ.
3. Joseph S. Elias, Design of High Frequency Mag Amp Regulators Using Metglas Amorphous Alloy 2714A", Allied-Signal Inc., Metglas Products, Parsippany, NJ.
4. Colonel McLyman, "Magnetic Core Conversion", KG Magnetics Inc. San Marino, Ca. (Software)

Engineering Notes

Chapter 9

Engineering Design Aids

1. information concerning the wire table . . . . . 400”
2. Wiretable 401
3. Magnet Wire and Materials Manufacturers 402
4. Common converter waveforms, with rms values. 404
5. Magnetic Component Manufacturers. 405
6. Transformer Parasitics 407
7. Magnetic design example test circuits.
   - Introduction 414
   - Half bridge converter design example 302 test circuit 415
   - Full H bridge converter design example 303 test circuit. 416
   - Push-pull design converter example 301 test circuit. 417
   - Single ended forward converter design example 304 test circuit 418
   - Buck converter design example 312 test circuit 419
   - Inverted buck-boost converter design example 314 & 317 test circuit . . 420
   - Boost converter design example 313 & 316 test circuit 421
   - Isolated buck-boost design example 315 & 318 test circuit 422
   - Forward converter mag-amp design example 308 test circuit 423
8. Parts List for the test circuits.
   - PWM LT1526B oscillator and output drive. 424
   - Half bridge converter design example 302 425
   - Full H bridge converter design example 303 426
   - Push-pull design converter example 301 427
   - Single ended forward converter design example 304 428
   - Buck converter design example 312 429
   - Inverted buck-boost converter design example 314 & 317 430
   - Boost converter design example 313 & 316. 431
   - Isolated buck-boost design example 315 & 318 432
   - Forward converter mag-amp design example .308 432
9. References 433
10. Bibliography . . . . . O 434

Information about the Wire Tables

[1] AWG

AWG is the American Wire Gage sizes 10 through 44.

[2] Bare Wire Area

Bare wire area in square centimeters.

[3] Bare Wire Area

Bare wire area in circular roils.

[4] $\mu\Omega$/ cm

This is the resistance of the copper wire in micro-ohms per centimeter.

[5] *Heavy Insulation

This is the total wire area with insulation in square centimeter.

[6] *Heavy Insulation

This is the turns per centimeters.

[7] *Heavy Insulation

This is turns per square centimeter using a fill factor of 0.6.

*Heavy Insulation is double coated magnet wire

Table 9.1 Wire Table

AWG	Bare Wire Area		$\mu\Omega$ / cm	Heavy Insulation		
	cm^2	CIR-MIL		cm^2	Turns/cm	Turns/cn?
10	0.05260	10384SX)	32.70	0.05590	3.87	10.73
11	0.04168	8226.00	41,37	0,04450	4.36	13.48
12	0.03308	6529.00	52,09	0.03564	4.85	16.81
13	().02626	5184.00	65.64	0.02836	5.47	21.15
14	0.02082	4109.00	82.80	0.02295	6.04	26,14
15	0.01615	3260.00	104.3	0.01837	6.77	32,66
16	0s)1307	2581.00	131.8	0.01473	7.32	40.73
17	0.01039	2052.00	165.8	0.01168	8.18	51.36
18	0.008228	1624.00	209.5	0.009326	9.13	64.33
19	0.006531	1289.00	263.9	0.007539	10.19	79.85
2(I	0.005188	1024.00	332.3	0.006065	11.37	98.93
21	0.004116	812.30	418.9	0.024837	12.75	124,0
22	().003243	640.10	531.4	0,003857	14.25	155.5
23	0.002588	510.80	666.0	0.003135	15.82	191.3
24	0.002047	404.00	842.1	0.002514	17.63	238.6
25	0.001623	320.40	1062.0	0.002002	19.8	299.7
26	0.001280	252.80	1345.0	0.001603	22.12	374.2
27	0.001021	201.60	1687.6	0.001313	24.44	456.9
28	0.0008048	158.80	2142.7	0.0310515	27.32	570.6
29	0.0006470	127.70	2664,3	0.0008548	30.27	701.9
3(I	0.0005067	100.0	3402.2	0.0006785	33.93	884.4
31	0.0004013	79.21	4294.6	0.0005596	37.48	1072
32	0.0003242	64,00	5314.9	0.0004559	41.45	1316
33	0.0002554	50.41	6748.6	0.0003662	46.33	1638
34	0.0002011	39.69	8572.8	0.0302863	52.48	2095
35	0.0001589	31.36	10849	0.0002268	58.77	2645
36	0.0001266	25.00	13608	0.0001813	65.62	3309
37	0.00010.26	20.25	16801	0.0001538	71.57	3901
38	0.00008107	16.00	21266	0,0001207	80.35	4971
39	0.00006207	12.25	27775	0,0000932	91.57	6437
40	0.00004869	9.61	35400	0.0000723	103.6	8298
41	0.00003972	7.84	43405	0.0000584	115.7	10273
42	0.00003166	6.25	54429	0.0300456	131.2	13163
43	0.00002452	4.84	70308	0.0000368	145.8	16291
44	0.00002020	4.00	85072	0.0000317	157.4	18957

Magnet Wire and Materials Manufacturers

Engineering Notes

Essex Magnet Wire
1510 Wall Street
Fort Wayne, Indiana 46802
Phone (219) 461-4000
FAX (219) 461-4531

Rep. No. _____

Phelps Dodge
Magnet Wire Corp.
P.O. Box 600
Fort Wayne, Indiana 46801
Phone (219) 458-4444
FAX (219) 420-1072

Rep. No. _____

MWS Wire Industries
31200 Cedar Valley Drive
Westlake Village, California 91362
Phone (818) 991-8553
FAX (818) 706-0911

Rep. No _____

Litz Wire

Cooner Wire Co.
9265 Owensmouth Ave.
Chatsworth, California 91311
Phone (818) 882-8311
FAX (818) 709-8281

Rep. No. _____

Foil

The E. Jordan Brookes Co. Inc.
6601 Telegraph Road
Los Angeles, California 90040
Phone (213) 722-8100
FAX (213)888-2275

Rep. No. _____

Industrial Dielectric's West Inc.
455 East 9th Street
San Bernardino, California 92410
Phone (714) 381-4734
FAX (714) 884-1494

Rep. No _____

Magnet Wire and Materials Manufacturers (cent)

Engineering Notes

Special Bobbins

Dorco Electronics
Fiberglass Products Div.
15533 Vermont Ave.
Paramount, California 90723
Phone (310) 633-4786
FAX (310) 633-0651

Rep. No.__..._. .___.___ –.–.-- . .

Transformers Materials

Fralock
21054 Osborne Street
Canoga Park, California 91304
Phone (818) 709-1288
FAX (818) 709-1738

Rep. No._... _____ —____ . . .

Figure 9.1 Shows how the rms value changes with different wave shapes

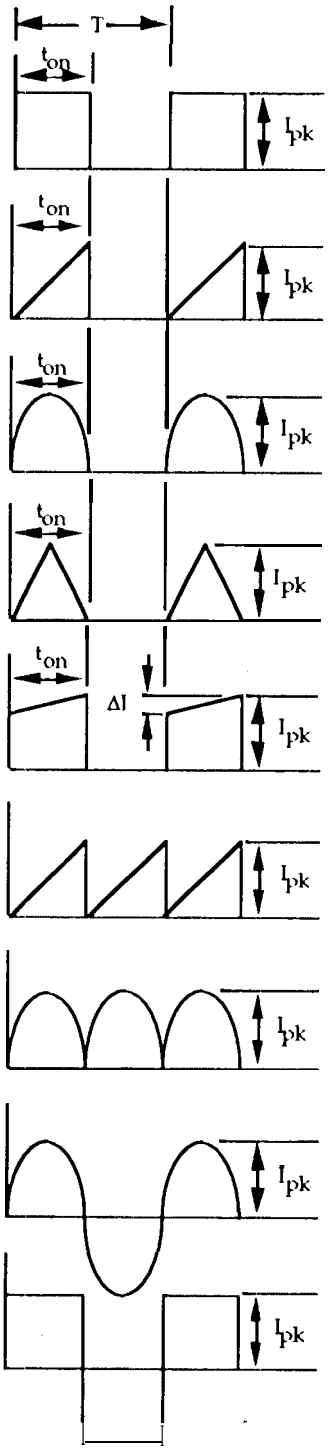

1. Square Wave $I_{rms} = I_{pk}\sqrt{\frac{t_{on}}{T}}$

2. Clipped Sawtooth $I_{rms} = I_{pk}\sqrt{\frac{t_{on}}{3T}}$

3. Half Sine Wave $I_{rms} = I_{pk}\sqrt{\frac{t_{on}}{2T}}$

4, Isosceles Triangle Wave $I_{rms} = I_{pk}\sqrt{\frac{t_{on}}{3T}}$

5. Trapezoidal Wave $I_{rms} = \sqrt{\left(I_{pk}^2 - I_{pk}\Delta I + \frac{\Delta I^2}{3}\right)\frac{t_{on}}{T}}$

6. Sawtooth $I_{rms} = \frac{I_{pk}}{\sqrt{3}}$

7. Full Sine Wave Rectified $I_{rms} = \frac{I_{pk}}{\sqrt{2}}$

8. Alternating Sine Wave $I_{rms} =$ $

9. Alternating Square Wave $I_{rms} = I_{pk}$

Figure 9.1 Common converter waveforms, with rms values.

Magnetic Component Manufacturers

The magnetic designed in chapter 3 are listed in Table 9.2 and can be supplied by the manufacturers listed below. The magnetic components can then be used for circuit evaluation and analysis.

Rodon Products Inc.
752(I Suzi Lane
Westminster, Ca. 92683
Phone (714) 898-352 FAX (714) 897-5099

RODON Products. Inc., a California Corporation, manufactures electromagnetic devices per customer specifications and will certify to MI L-I-45208, Inspection System Requirements. This includes coils, chokes, inductors and transformers, both toroidal and standard E-1 cores. RODON specializes in working with fine wire components which includes AWG #40 to AWC; #50 gage magnet wire. With 32 years of experience, RODON has the capability of providing design assistance regarding these items. Engineering assistance is available for the writing of specifications for electro-magnet items in accordance with both military and commercial requirements.

Transmission Networks International
205 Forest Drive
Knightdale, NC 27545
Phone (919) 266-4411 FAX (919) 266-6008"

Transmission Networks international, (TN]) has built a solid reputation on quality products and service in the design and manufacture of custom coils, filters, inductors, and transformers. TNI has a fully documented quality program which includes statistical process control (SPC) and meets the requirements of Mil-I-45208. Units can be constructed to UL, VDE, CSA, BE LLCORE, and Mil T-27 specifications.

Table 9.2 Manufacturers Equivalent Part Number.

Manufacturers Part Number		
Example No.	TNI	**Rodon**
301	T6058	241103
302	T6059	241104
303	T6060	241105
304	T6061	241106
305	T6062	241107
306	T6063	241108
307	T6064	241109
308	T6065	241110
309	T6066	241111
310	T6067	241112
311	T6068	241113
312	T6069	241114
313	T6070	241115
314	T6071	241116
315	T6072	241117
316	T6073	241118
317	T6074	241119
318	T6075	241120
319	T6076	241121
320	T6077	241122
321	T6078	241123
322	T6079	241124

Transformer Parasitic

Operation of transformers at high frequencies presents unique design problems due to the increased importance of core loss, leakage inductance, and winding capacitance. Designing high frequency power converters is far less stringent than designing high frequency wide band audio transformers. operating at a single frequency requires less turns, and consequently there is less leakage inductance and less capacitance with which to deal. The equivalent circuit for a two winding transformer is shown in Figure 9.2.

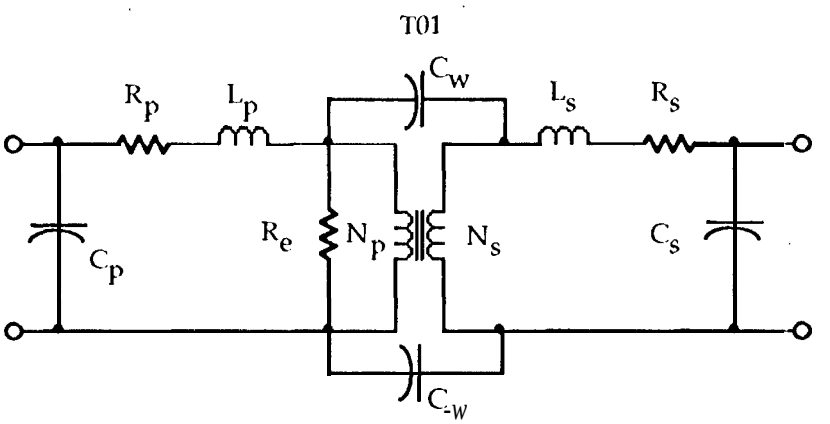

Figure 9.2 Equivalent transformer circuit.

High frequency designs require considerably more care in specifying the winding configuration. This is because physical orientation and spacing of the windings determine leakage inductance and winding capacitance. Leakage inductance and capacitance are actually distributed throughout the windings in the transformer. However, for simplicity, they are shown as lumped constants in Figure 9.2. Leakage inductance is represented by L_p for the primary and L_s for the secondary, C_p and C_s are the equivalent lumped capacitance's of the primary and secondary winding, R_p and R_s are the equivalent dc resistances of the primary and secondary windings, C_w is the equivalent winding to winding capacitance, and R_e is the equivalent core-loss shunt resistance, The effects of leakage inductance and winding capacitance on switching power circuits are shown in Figure 9,3.

The voltage spikes shown in Figure 9.3 are caused by the stored energy in the leakage flux and will increase with load. These spikes will always appear on the leading edge of the voltage waveform. Transformers designed for switching applications are normally designed to have minimum leakage inductance in order to minimize the voltage spikes and reduce stress on the switching transistors.

Transformers designed for power conversion are normally being driven with a squarewave characterized by fast rise and fall times. This fast transition will generate high current spikes in the primary winding due to the parasitic capacitance of the transformer. These current spikes, shown in Figure 9.3, are caused by the capacitance in the transformer and will always appear on the leading edge of the current waveform. This parasitic capacitance will be charged and discharged every half cycle. Transformer leakage inductance and capacitance have an inverse relationship: if you decrease the leakage inductance, you will increase the capacitance; if you decrease the capacitance, you increase the leakage inductance, These are the trade-offs the power conversion engineer must make to design the best transformer for the application.

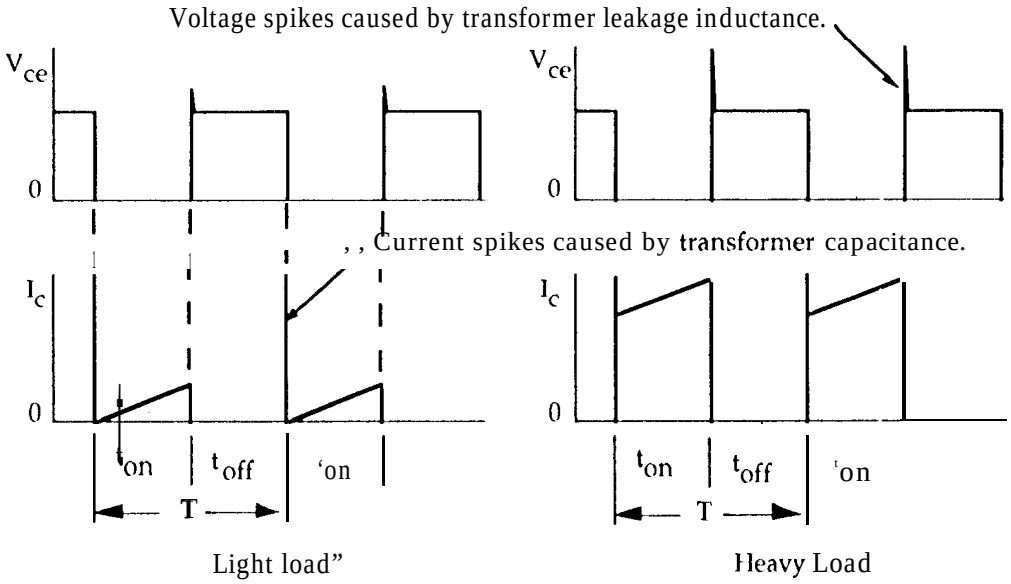

Figure 9,3 Transistor voltage and current switching waveforms

Minimizing Leakage Inductance

Magnetic core geometry has a big influence on leakage inductance. Magnetic cores used in power conversion can be designed to reduce the leakage inductance. The ideal transformer has a long winding length with a short winding build like T01 as shown in Figure 9.4.

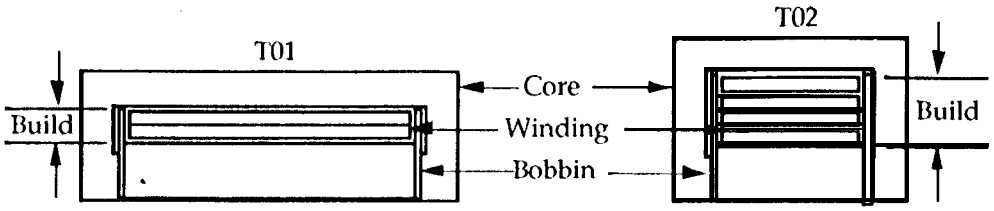

Figure 9.4 Low leakage, low profile transformer.

To minimize leakage inductance, the primary winding should be wound on a long bobbin (or tube) with the secondary wound as close as possible using a minimum amount of insulation. A toroidal core is ideal because the winding length is spread over the entire circumference of the core.

If layer windings must be used, one way to minimize the leakage inductance is to divide the primary wind ing into sections and then sand with the secondary winding between them as shown in Figure 9.5. This can pose a real problem when designing around the European VDE specifications because of the required creepage distants and minimum insulation between primary and secondary.

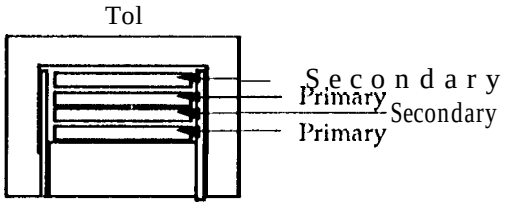

Figure 9,5 Interleaving primary and secondary windings.

Minimizing the leakage inductance on a push-pull converter design is a big problem. Special considerations are required to get symmetry in both leakage inductance and dc resistance; this is in order to get a balanced winding for the primary switching circuit to function properly.

The best way to minimize the leakage inductance and have a balanced dc resistance in a push-pull or center-tapped winding is to wind bifilar. Bifilar windings will drastically reduce leakage inductance. This condition also exists cm the secondary when the secondary is a full wave center-tapped circuit. A bifilar winding is a pair of insulated wires wound simultaneously and contiguously (i.e., close enough to touch each other; warning: do not use bifilar wire or the capacitance will go out of sight). Each wire constitutes a winding; their proximity reduces leakage inductance by several orders of magnitude more than ordinary interleaving, This

arrangement can be applied to the primary, the secondary, or, it can be applied to the primary and secondary together. This arrangement. will provide the minimum leakage inductance,

Capacitance

When a transformer is operating, different voltage gradients arise almost everywhere. These voltage gradients are caused by a large variety of capacitance throughout the transformer due to the turns and how they are placed throughout the transformer. When designing high frequency converters, there are several factors that have a control over the turns: (1) the operating flux density or core loss, (2) the operating voltage levels in the primary and secondary, and (3) the primary inductance.

Keeping the turns to a minimum will keep the capacitance to a minimum,. This capacitance can be separated into four categories: (1) capacitance between turns, (2) capacitance between layers, (3) capacitance between windings, and (4) stray capacitance. The net effect of the capacitance is normally seen by the lumped capacitance on the primary. This lumped capacitance is very difficult calculate by it self. It is much easier to measure primary inductance and the resonant frequency of the transformer, then calculate the capacitance.

$$C_p = \left(\frac{1}{(\omega_r)^2 L}\right) = \frac{1}{4\pi^2 f_r^2 L}$$

Capacitance Turn to Turn

'I'he turn-to-turn capacitance shown in Figure 9.6 should not be a problem in low voltage power converters due to the low number of turns required at high frequency.

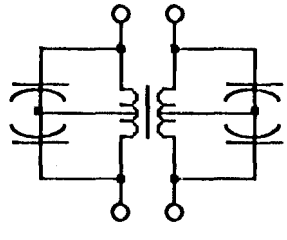

Figure 9.6 Capacitance turn to turn.

Capacitance Layer to Layer

The capacitance between layers on the primary or secondary is the biggest contributor to the overall lumped capacitance. There are three ways to minimize the layer capacitance: (1) divide the primary or secondary winding into sections and then sandwich the other winding between

them as shown in Figure 9.5, (2) the foldback winding shown in Figure 9.7 is preferred to the normal U type winding even though it takes an extra step before starting the next layer. (3) increasing the amount of insulation between windings will decrease the amount of capacitance but remember this will increase the leakage inductance. If the capacitance is reduced then the leakage inductance will go up. There is one exception to this rule - sandwiching or interleaving the windings, This will reduce the winding capacitance but will increase the winding-to-winding capacitance.

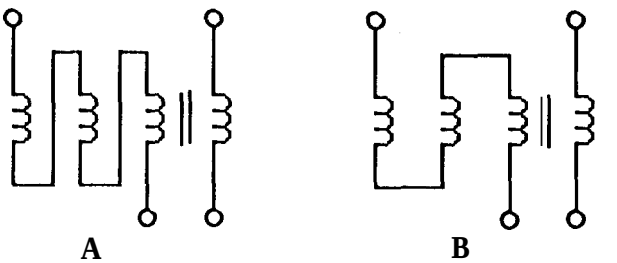

Figure 9.7 Comparing foldback winding A to a U winding in B.

Transformers and inductors wound on toroidal cores could have capacitance problems if care is not taken in the design at the beginning. It is difficult to control the windings on a toroidal core because of its odd configuration, but there are ways to control the windings and capacitance. The use of tape barriers to mark a zone for windings as shown in Figure 9.8 offers a good way to control this capacitance.

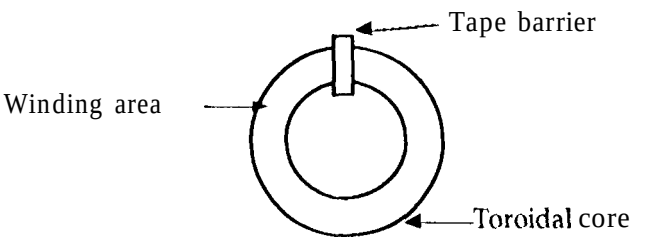

Figure 9.8 Toroidal winding barriers.

Another way to help reduce the capacitance effect is to use the progressive winding technique. The progressive winding technique is shown for example in Figure 9.9: wind 5 turns forward [F] and wind 4 turns back [B], then wind 10 forward [F] and keep repeating this until the winding is complete as shown in Figure 9.9.

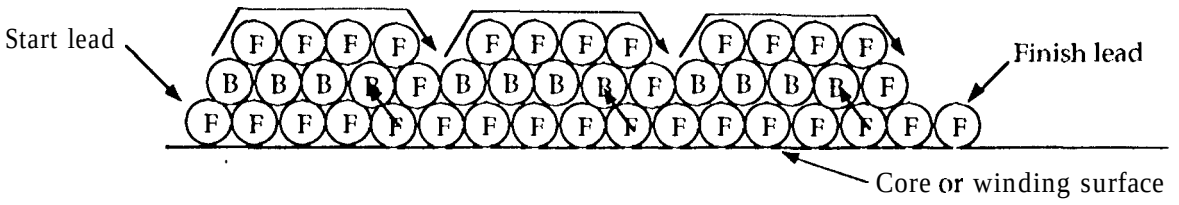

Figure 9.9 Using the progressive winding technique.

Capacitance Winding to Winding

Balanced windings are very important in keeping down noise and common mode signals that could lead to in circuit noise problems later on. The capacitance from winding to winding can be reduced by increasing the amount of insulation between windings. This will decrease the amount of capacitance but again this will increase the leakage inductance. The capacitance effect between windings can be reduced, without increasing the leakage inductance noticeably. This can be done by adding a faraday shield or screen as shown in Figure 9.10 between primary and secondary windings. The faraday shield is normally added along with the insulation between primary and secondary. A faraday shield is a electrostatic shield and is normally made with copper foil.

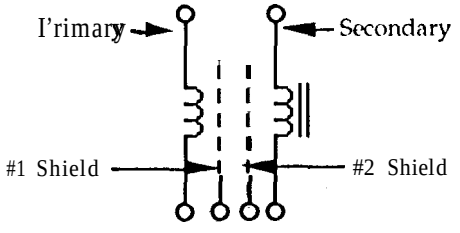

Figure 9.10 Transformer with a primary and secondary shield,

Stray Capacitance

Stray capacitance is very important to minimize because it to can generate asymmetry currents and could lead to high common mode noise. Stray capacitance is similar to winding to winding capacitance except that the capacitance is between winding next to the core C_c and winding to the surrounding circuitry C_s as shown in Figure 9.11. Stray capacitance can be minimized by using a balanced winding or using a copper shield over the entire winding.

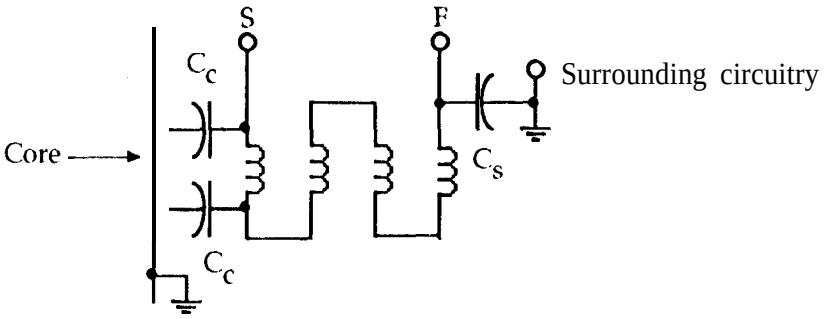

Figue 9.11 Transformer winding with stray capacitance.

Summary

When a transformer is fabricated, all parameters should be measured and recorded. This should include: (1) parasitic such as leakage inductance, (2) resonant frequency and (3) magnetizing current. Although magnetizing current is not a parasitic but is important as it will give a handle on the magnetic material and gap spacing, and it is a good shorted turn indicator. It will also have merit when comparing one design with another.

A good transformer design will have a leakage inductance about ≈1% of the self inductance and a resonant frequency at least a decade above the operating frequency.

Magnetic Design Examples Test Circuits

Introduction

The test circuits that follow are based on the LT1526/3526 PWM I.C. Although this device is not considered a state of the art control I.C., it is simple to use, hard to damage and with just one basic circuit allows testing of many different magnetic elements.

The magnetic element in a converter/inverter is the heart of the circuit. It should normally be the first thing considered in the design. Some engineers consider the electrical circuit as a first priority. They concentrate on the electrical circuit only to find later on that the magnetics are too large for their application or impossible to build within a reasonable cost. This book makes it much easier for engineers to make sure there their magnetics designs are optimum and therefore, the electrical and mechanical portions require less effort and risk,

Magnetic components are probably the single most flexible circuit element that the electrical engineer can use. The variety of core geometries, wire sizes, types of wires (Litz, foils, square stock, etc.) different bobbins and winding techniques all combine to form an almost infinite number of potential solutions to any circuit requirement,

I.C. manufactures do not offer as wide a variety of components as magnetics manufactures but the variations are still impressive, Linear Technology offers double ended devices in current mode (LT1 846) and voltage mode (LT1526). Single ended current mode (1241 family) are offered as well as very high speed versions such as the LT1246. The LT1 148 / 1149 family of devices offer the engineer current mode single ended synchronous rectified control schemes that can have efficiencies in the mid 90% region.

By paying close attention to the magnetics design, it is possible to have devices like the LTI105, that use flux regulation of a secondary of a converter eliminating the opto isolator for isolated designs. This is an example of how the circuit concept can only work when the magnetics is considered first, The regulation of this circuit is a direct function of how the transformer in the circuit is constructed.

There are other devices and engineering tools in development by both I.C. and magnetics manufactures that will help the electrical engineer optimize designs with greater accuracy in shorter periods of time.

I highly recommend that the readers of this book build up the test circuits and keep them around the lab. They are useful tools for evaluation of what you build for yourself or of what your magnetics vendors are supplying to you. In many cases, you may be able to "scale" the designs for other applications.

Ron G. Vinsant
Linear Technology

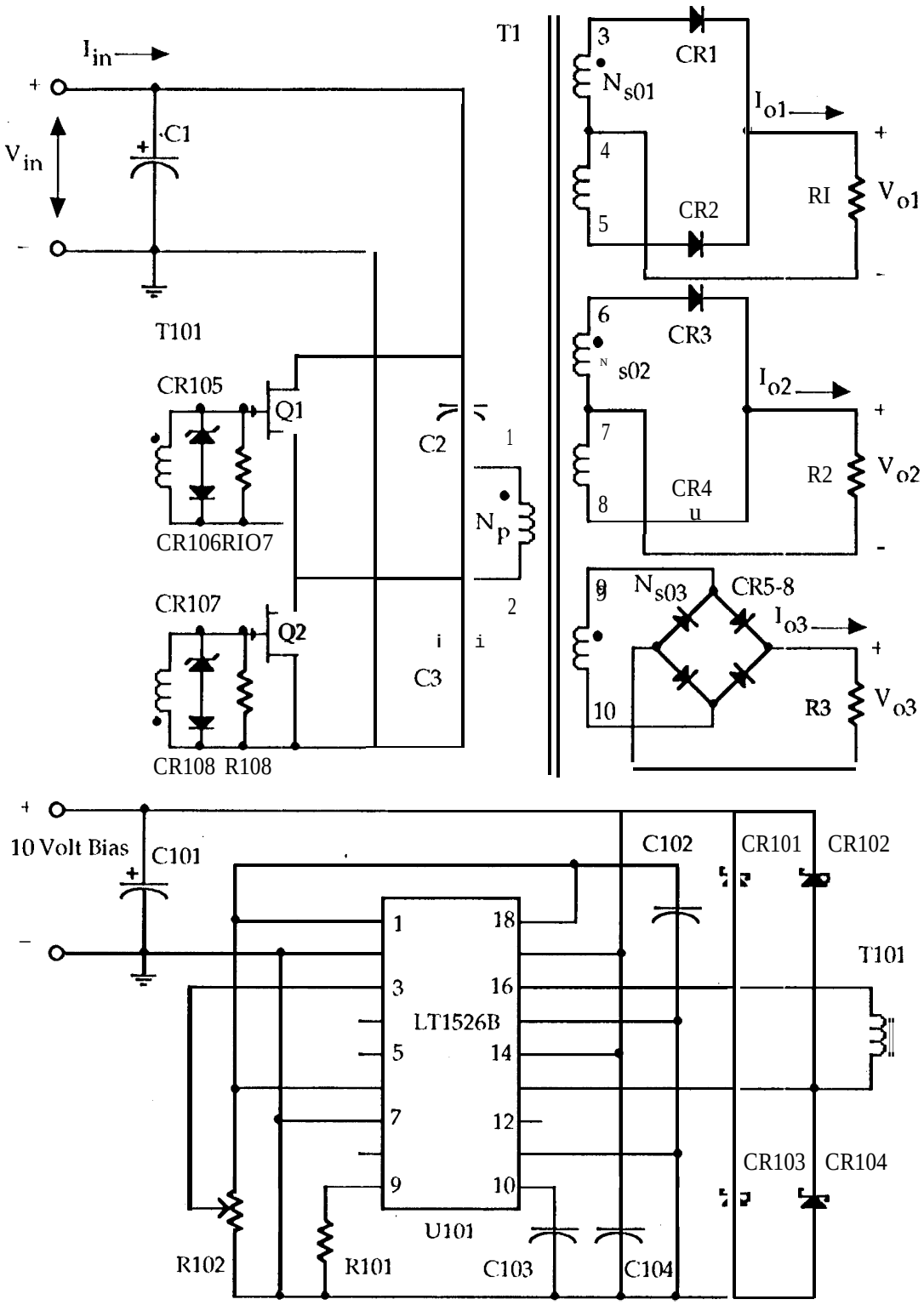

Figure 9,12 Half bridge design example 302 test circuit,

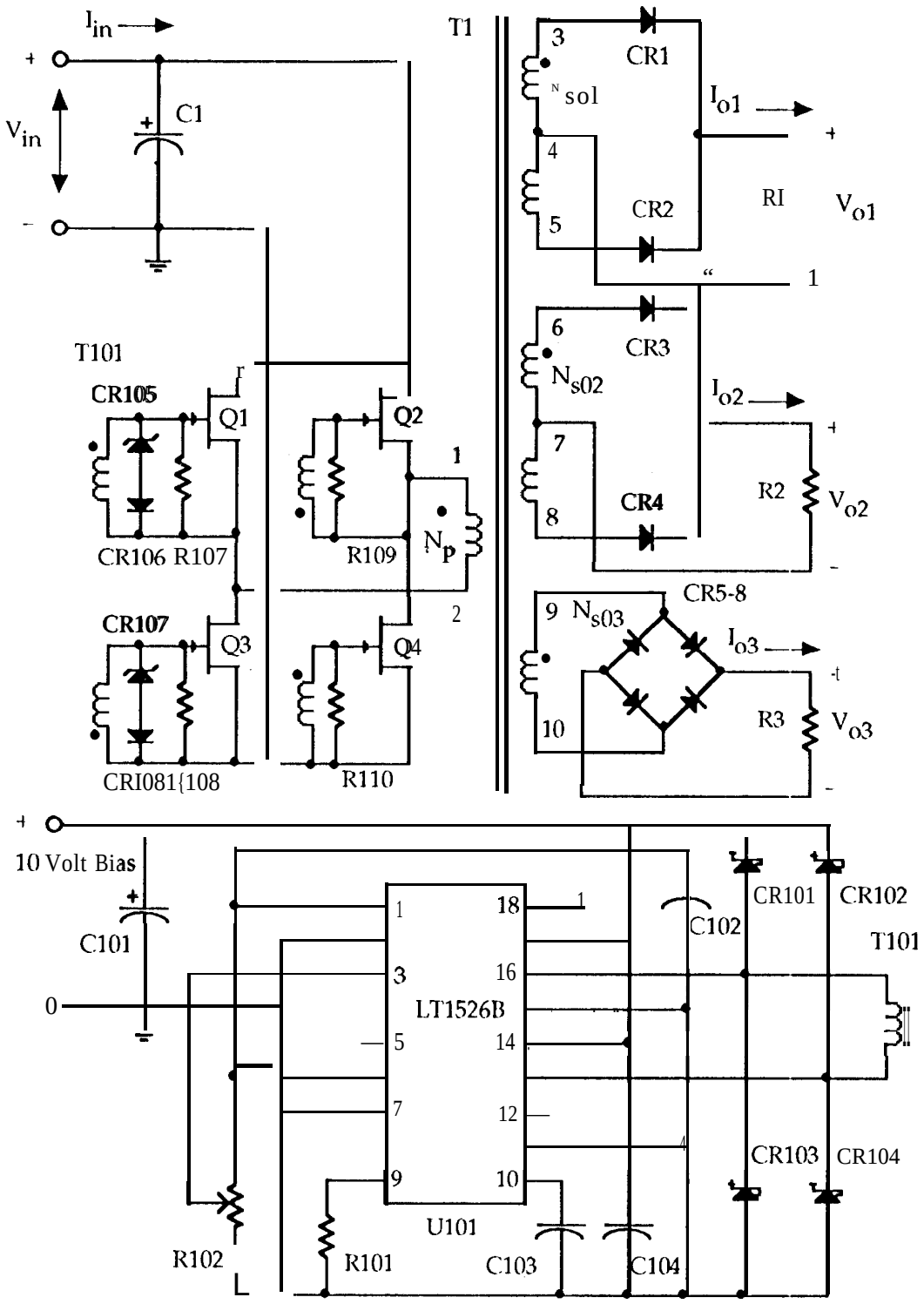

Figure 9.13 Full H bridge design example 303 test circuit,

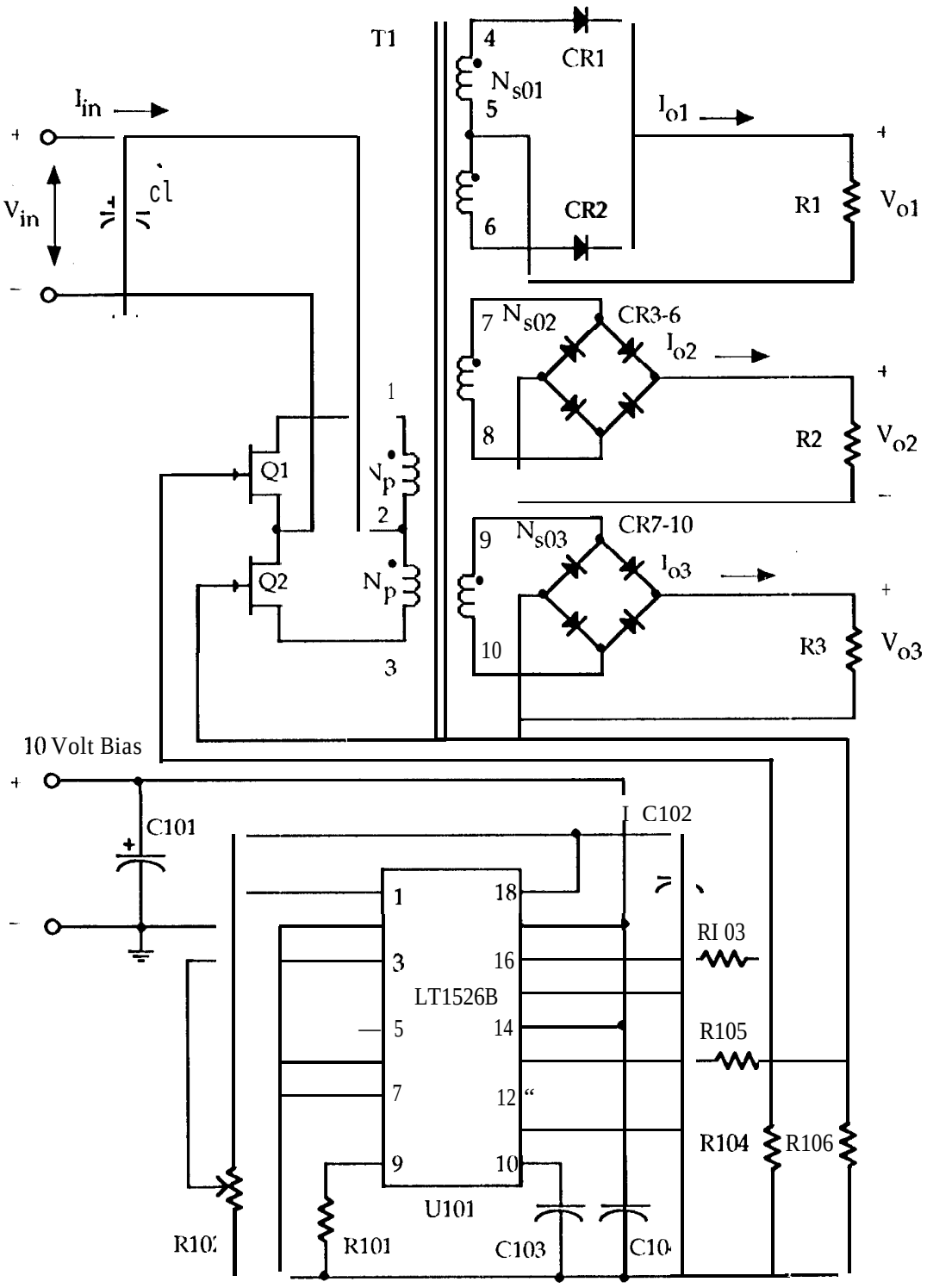

Figure 9.14 Push-pull design example .301 test circuit.

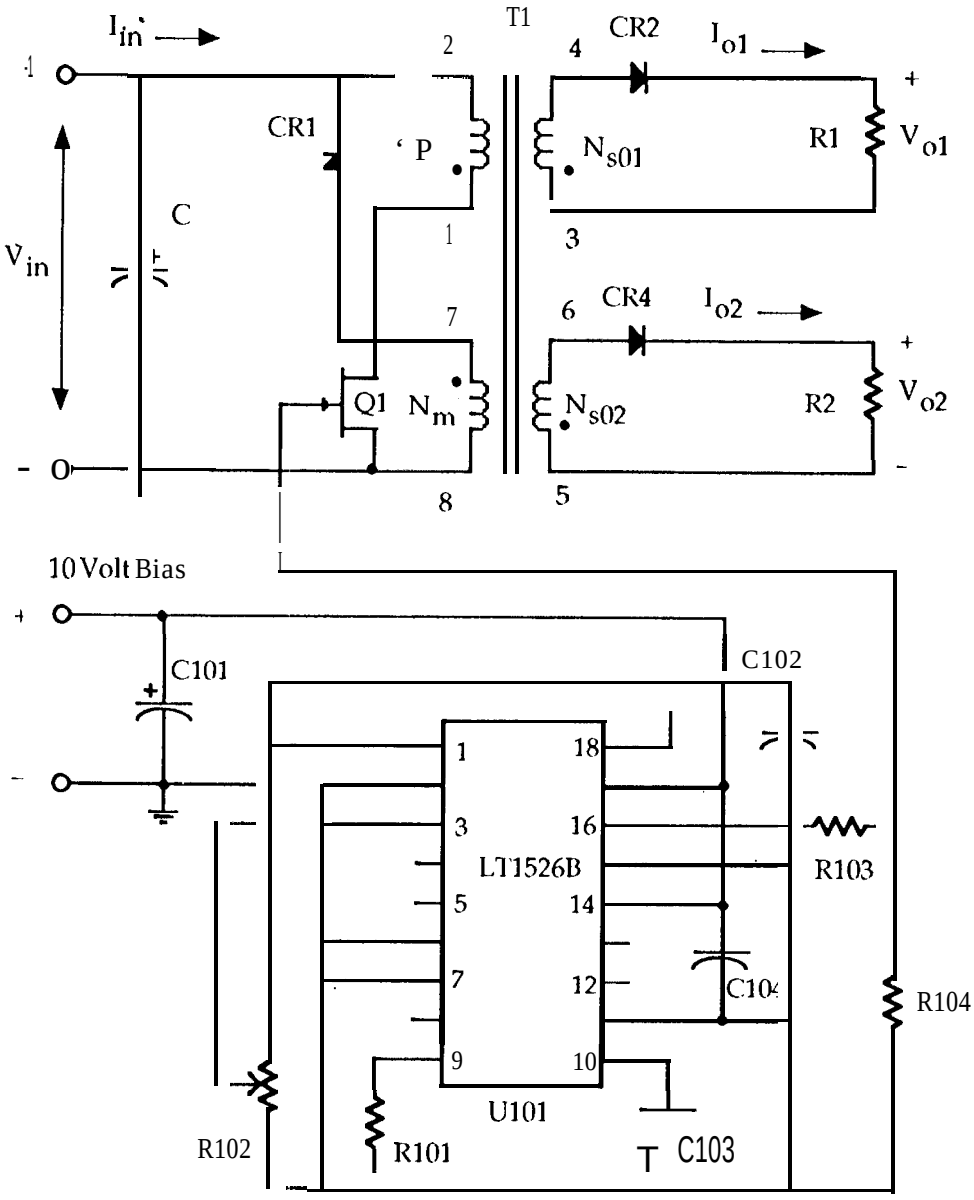

Figure 9.15 Single ended forward converter design example 304 test circuit.

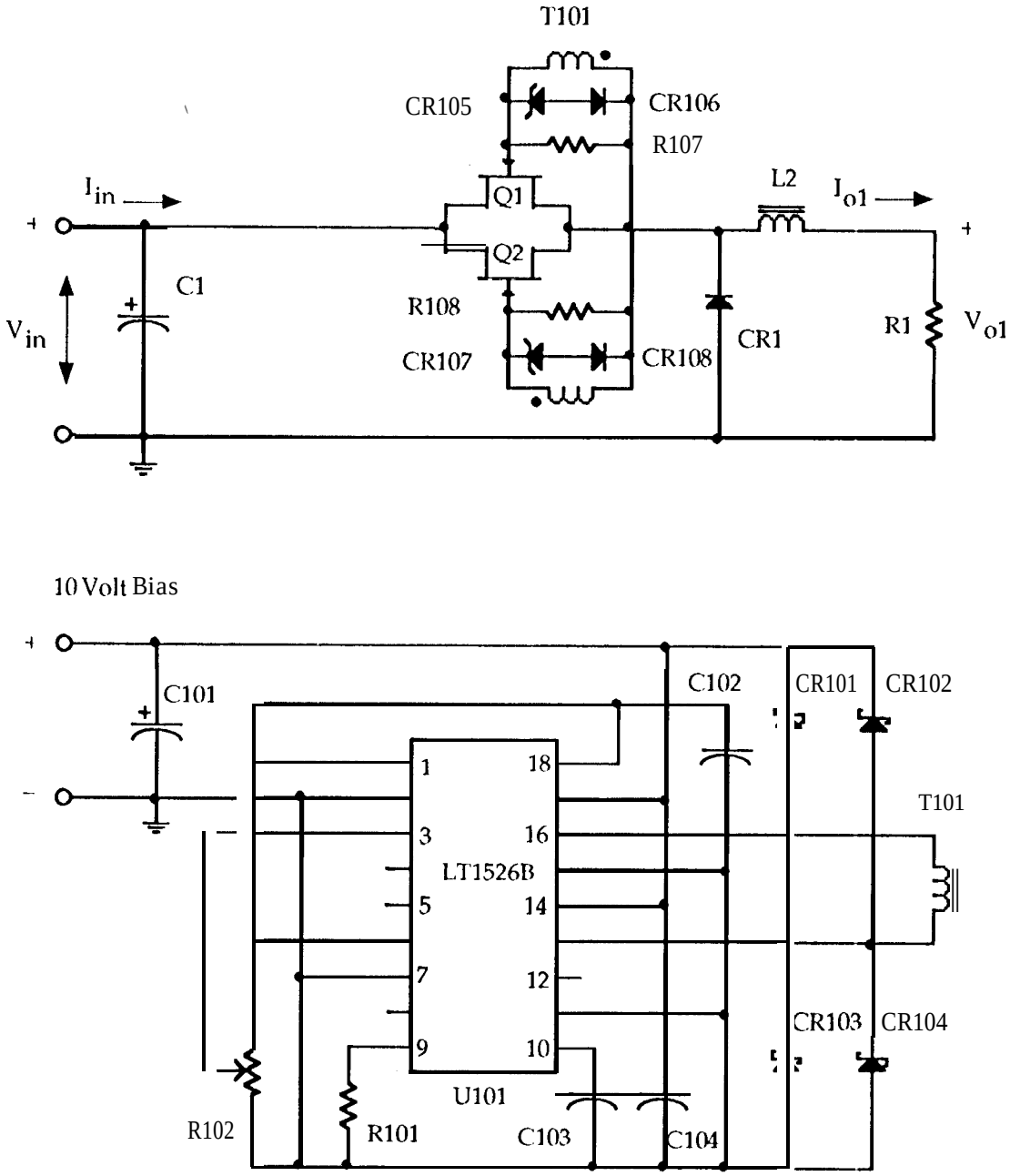

Figure 9.16 Buck converter design example 312 test circuit.

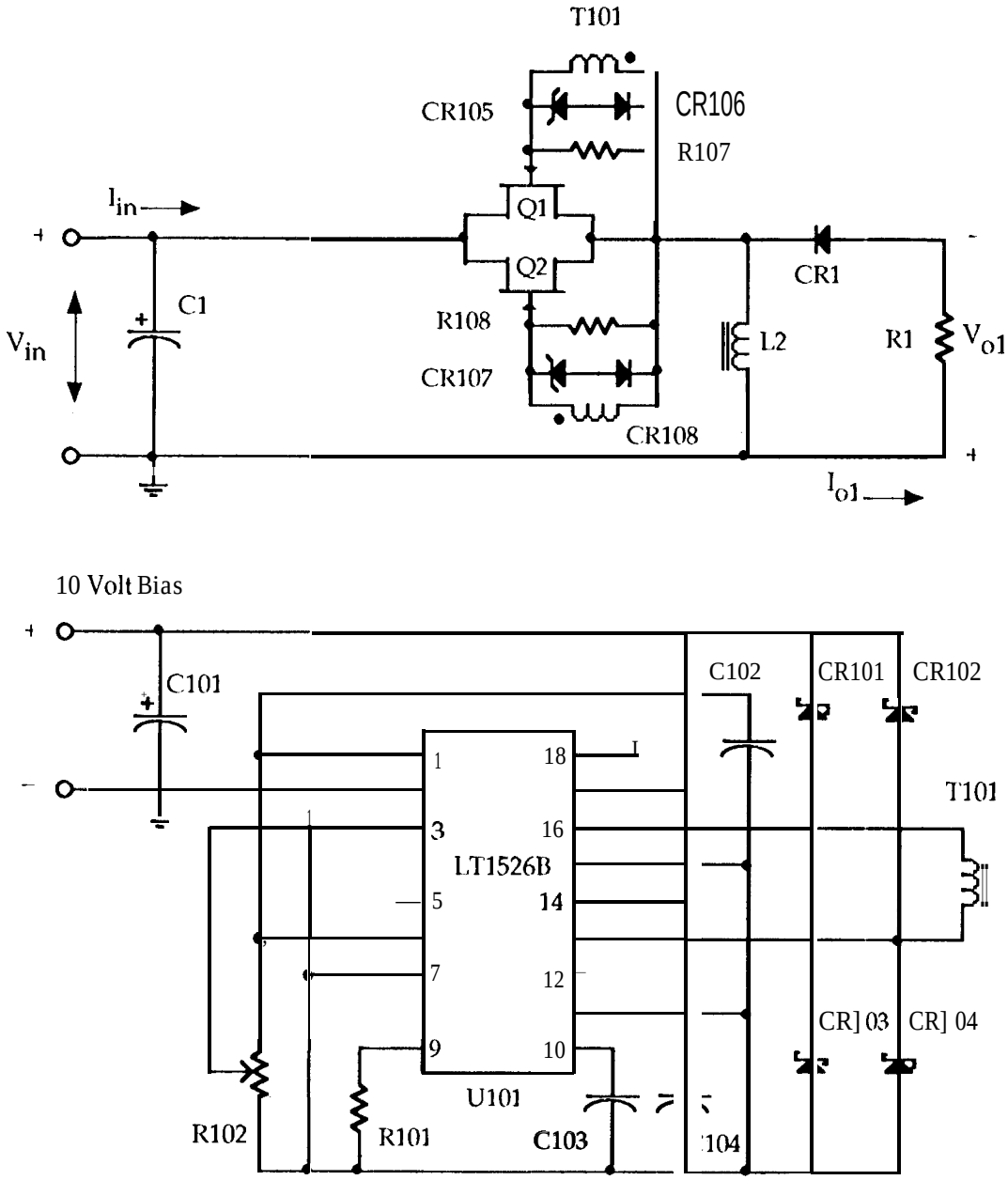

Figure 9.17 Inverted buck-boost converter design example 314 &31 7 test circuit.

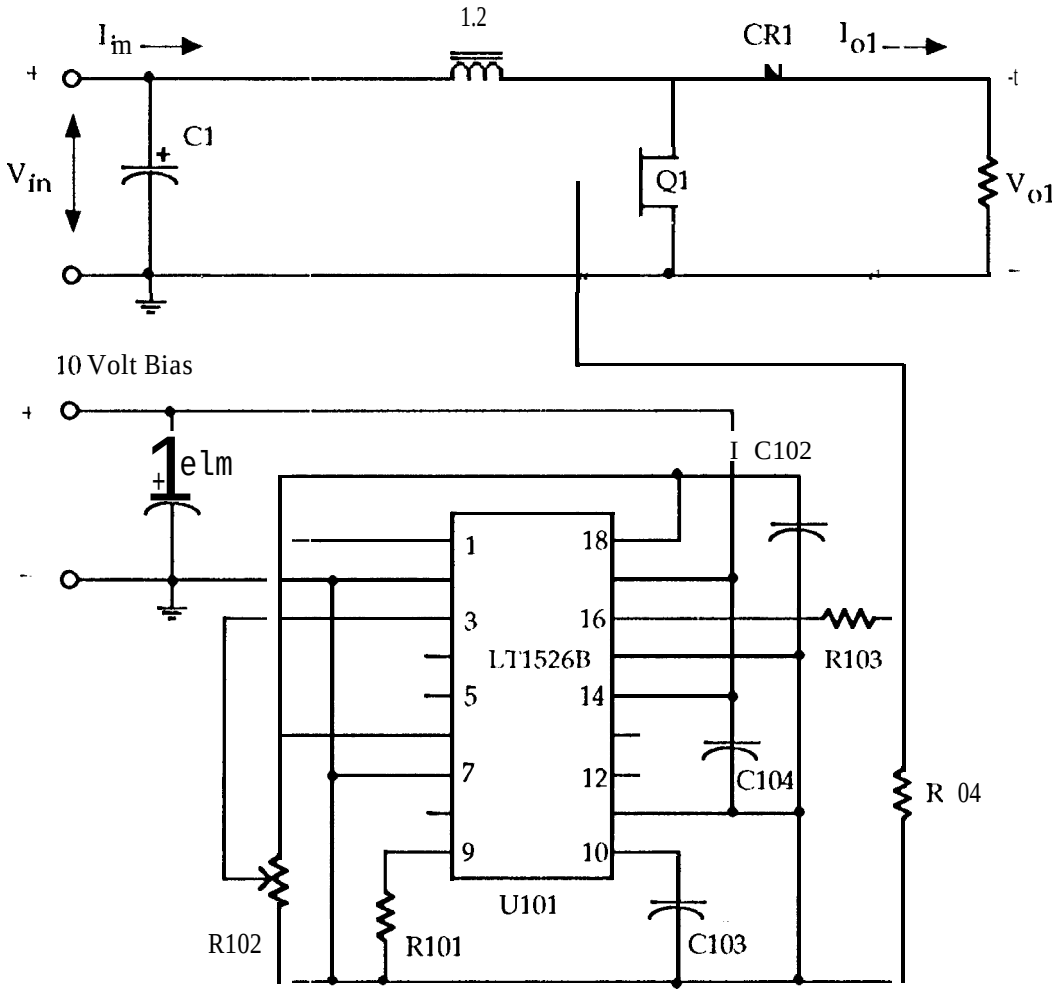

Figure 9,18 Boost converter design example 313 & 316 test circuit,

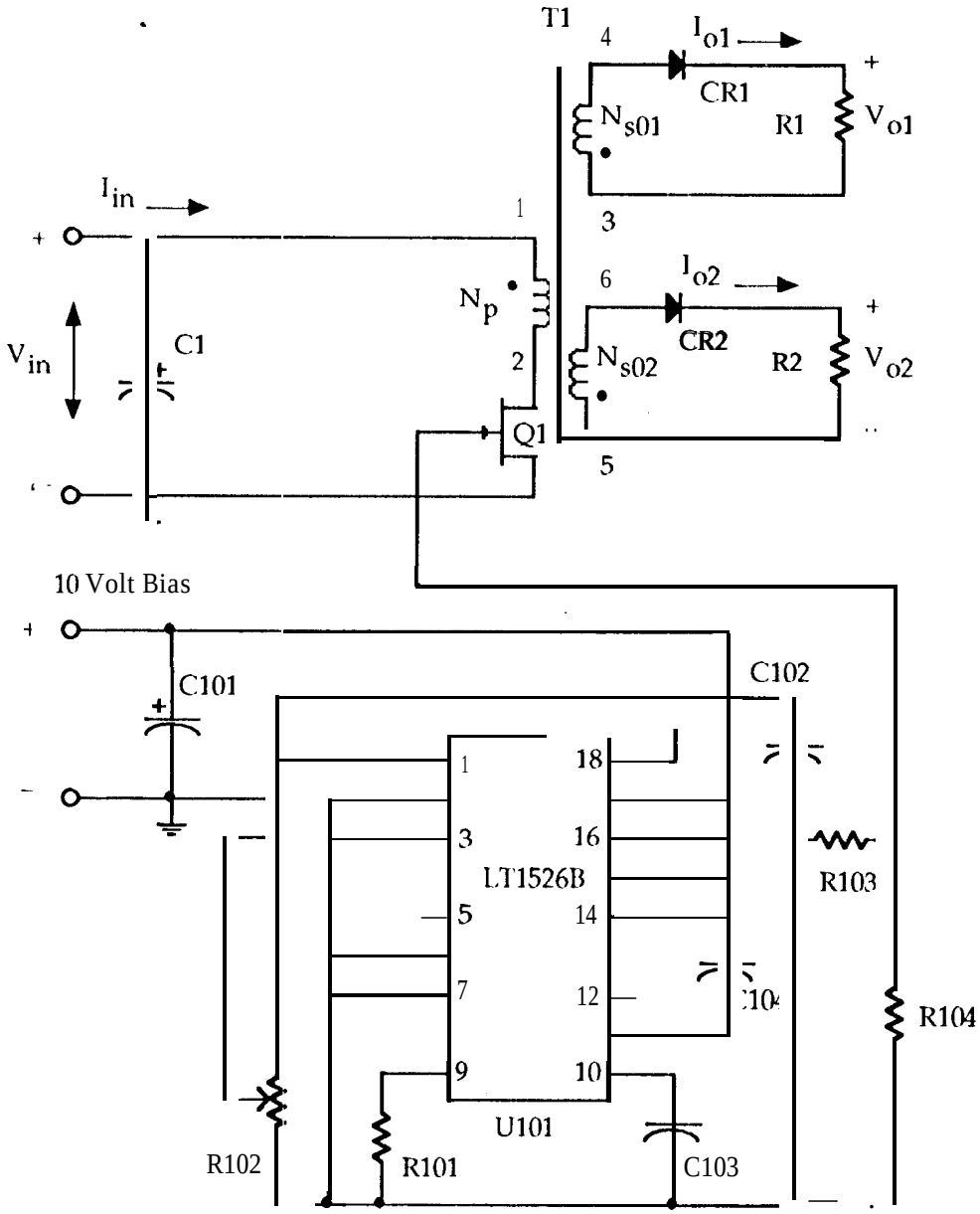

Figure 9.19 Isolated buck-boost converter design example 315 & 318 test circuit.

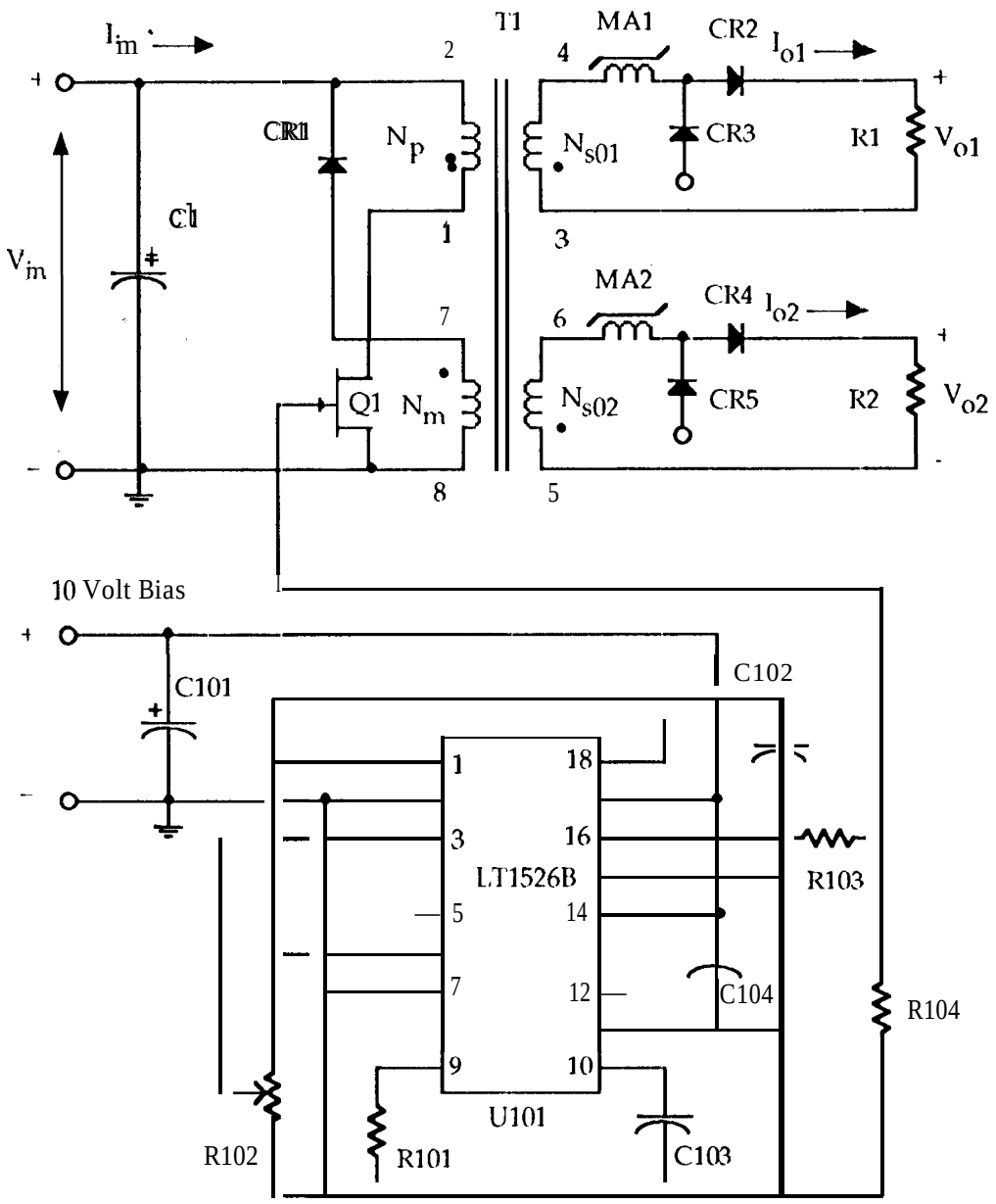

Figure 9.20 Single ended forward converter mag-amp design example 308 test circuit.

Parts List

PWM LT1526B Oscillator and Output Drive

Component		Value	Type	Manufacturer
1.	C101	10 µf 35 volts	150D	Sprague
2.	C102	0.1µf 100 volt	CK06	Mallory
3.	C103	0.0022 µf 100 volt	CK06	Mallory
4.	C104	0.1µf 100 volt	CK06	Mallory
5.	CR101	1N5818	Schottky	Motorola
6.	CR102	1N5818	Schottky	Motorola
7.	CR103	1N5818	Schottky	Motorola
8.	CR104	1N5818	Schottky	Motorola
9.	CR105	1 N5929A	Zener	Motorola
10.	CRI 06	1 N4933	F/R	Motorola
11.	CR107	1 N5929A	Zener	Motorola
12.	CR108	1N4933	F/R	Motorola
13.	Frequency Control			
	R101	≈10KΩ 1 /2W (50kHz)	RC20	Ohmite
	R101	≈22KΩ 1 /2W (25kHz)	RC20	Ohmite
14.	R102	1K	3359P	Bourns
15.	RI 0.3	47Ω 1 /2w	RCR20	Ohmite
16.	R] 04	1KΩ 1 /2W	RCR20	Ohmite
17.	R105	47Ω1 /2w	RCR20	Ohmite
18.	R] 06	1KΩ1 /2W	RCR20	Ohmite
19.	R107	1KΩ 1/2W	RCR20	Ohrnite
20.	R108	1KΩ 1/2W	RCR20	Ohmite
21.	R109	1KΩ l/2W	RCR20	Ohmite
22.	R11O	1KΩ l/2W	RCR20	Ohmite
23.	T101	Drive Trans.	322	
24.	U101	LT1526B, 2526B, 3526B	PWM	Linear Technolgy

Parts List

Half Bridge Design Example 302,

Component		Value	Type	Manufacturer
1.	C1	10µf @ 250V	TVA1501	Sprague
2.	C2	2µf @ 200V	430P	Sprague
3.	C3	2pf @ 200V	4301'	Sprague
4.	CR]	MUR420	F/R	Motorola
5.	CR2	MUR420	F / R	Motorola
6.	CR3	MUR420	F/R	Motorola
7.	CR4	MUR420	F/R	Motorola
8.	CR5	MUR420	F/R	Motorola
9.	CR6	MUR420	F/R	Motorola
10.	CR7	MUR420	F/R	Motorola
11.	CR8	MUR420	F/R	Motorola
12.	Q1	MTI'7N20	MOSFET	Motorola
13.	Q2	MTP7N20	MOSFET	Motorola
14.	Resistor RI (5 volts@ 2 amps)			
		5Ω	25W	Ohmite
		5Ω	25W	Ohmite
15.	Resistor R2 (28 volts@ 1 amps)			
		15Ω	25W	Ohmite
		15Ω	25W	Ohmite
16.	Resistor R3(12 volts @0.5 amps)			
		25Ω	25W	Ohmite
17,	T1	Transformer	302	

Parts List

Full Bridge Design Example 303.

Component		Value	Type	Manufacturer
1.	c 1	10µf @250V	TVA1501	Sprague
2.	CR1	MUR420	F/R	Motorola
3.	CR2	MUR420	F/R	Motorola
4.	CR3	MUR420	F/R	Motorola
5.	CR4	MUR420	F/R	Motorola
6.	C R 5	MUR420	F/R	Motorola
7.	CR6	MUR420	F/R	Motorola
8.	CR7	MUR420	F/R	Motorola
9.	CR8	MUR420	F/R	Motorola
10.	Q1	MTP7N20	MOSFET	Motorola
11.	Q2	MTP7N20	MOSFET	Motorola
12.	Q3	MTP7N20	MOSFET	Motorola
13.	Q4	MTP7N20	MOSFET	Motorola
14.	Resistor R] (5 volts@ 2 amps)			
		5Ω	25W	Ohmite
		5Ω	25W	Ohmite
15.	Resistor R2 (28 volts@ 1 amps)			
		15Ω	25W	Ohmite
		15Ω	25W	Ohmite
16.	Resistor R3 (12 volts@ 0,5 amps)			
		25Ω	25W	Ohmite
17.	T1	Transformer	302	

Parts List

Push-Pull Design Example 301

Component		Value	Type	Manufacturer
1.	c 1	100pf @50V	TVA1310	Sprague
2.	CR1	MUR420	F/R	Motorola
3.	CR2	MUR420	F/R	Motorola
4.	CR3	MUR420	F/R	Motorola
5.	CR4	MUR420	F/R	Motorola
6.	CR5	MUR420	F/R	Motorola
7.	CR6	MUR420	F/R	Motorola
8.	CR7	MUR420	F/R	Motorola
9.	CR8	MUR420	F/R	Motorola
10.	CR9	MUR420	F/R	Motorola
11.	CR1 0	MUR420	F/R	Motorola
12.	Q1	MTH20N15	MOSFET	Motorola
13.	Q2	MTH20N15	MOSFET	Motorola
14.	Resistor RI (5 volts@ 4 amps)			
	(4)	5Ω	12W	Ohmite
15.	Resistor R2 (12 volts@ 0,25 amps)			
		47Ω	12W	Ohmite
16.	Resistor R3(12 volts @ 0.25 amps)			
		47Ω	12W	Ohmite
17.	T1	Transformer	301	

Parts List

Forward Converter Design Example 304

Component		Value	Type	Manufacturer
1.	C1	100µf @ 50V	TVA1310	Sprague
2.	CR1	MUR420	F/R	Motorola
3.	CR2	MUR420	F/R	Motorola
4.	CR3	MUR420	F/R	Motorola
5.	CR4	MUR420	F/R	Motorola
6.	CR5	MUR420	F/R	Motorola
7.	Q1	MTH25N10	MOSFET	Motorola
8.	Resistor R1 (5 volts@ 2 amps)			
	(2)	5Ω	12W	Ohmite
9.	Resistor R2 (12 volts@ 2 amps)			
	(2)	15Ω	25W	Ohmite
10.	T1	Transformer	304	

Parts List

Buck Converter Design Example 312

Component		Value	Type	Manufacturer
1.	C1	100pf @50V	TVA1310	Sprague
2.	CR1	MUR420	F/R	Motorola
3.	Q1	MTJ'1ONO5	MOSFET	Motorola
4.	Q2	MT1'1ON05	MOSFET	Motorola
5.	Resistor R1 (10 volts@ 4 amps max.)			
	(2)	5Ω	50W	**Ohmi te**
6.	L2	Inductor	**312**	

Parts List

Inverted Buck-Boost Converter Design Example 317

Component		Value	Type	Manufacturer
1.	c 1	100pf @50V	TVA1310	Sprague
2.	CR1	MUR420	F/R	Motorola
3.	Q1	MTP10N05	MOSFET	Motorola
4.	Q2	MTP10N05	MOSFET	Motorola
5.	Resistor R1 (28 volts@ 1 amps max.)			
	(2)	15Ω	50W	Ohmite
6.	L2	Inductor	317	

Parts List

Boost Converter Design Example 313

Component		Value	Type	Manufacturer
1.	c 1	100µf @ 50V	TVA131O	Sprague
2.	CR1	MUR420	F/R	Motorola
3.	Q]	MTP10N08	MOSFET	Motorola
4.	Q2	MTP10N08	MOSFET	Motorola
5.	Resistor RI (57 volts@ 1 amps max.)			
	(1)	50Ω	1 (K)W	Ohmite
6.	L2	Inductor	313	

Parts List

Flyback Converter Design Example 318

Component		Value	Type	Manufacturer
1.	C1	100pf @50V	TVA1310	Sprague
2.	CR1	MUR420	F/R	Motorola
3.	CR2	MUR420	F/R	Motorola
4.	Q1	MTP8N08	MOSFET	Motorola
5.	Resistor R1 (5 volts@ 1 amps)			
		5Ω	12W	Ohmite
6.	Resistor R2 (12 volts @0.3 amps)			
		50Ω	12W	Ohmite
7.	T1	Transformer	318	

Mag-amps will be check in the single ended forward converter example 304 test circuit.