The Space-Cube Architecture

JPL Internal

A Road Map For The Future

Gary Bolotin
Avionic Equipment Section 344
Flight Computer Development Group

SPACE-CUBE ARCHITECTURE

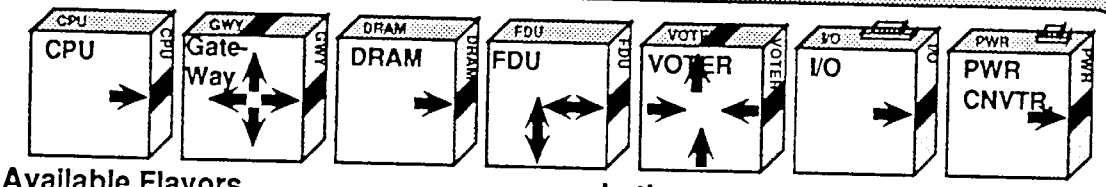

Available Flavors

and others • • •

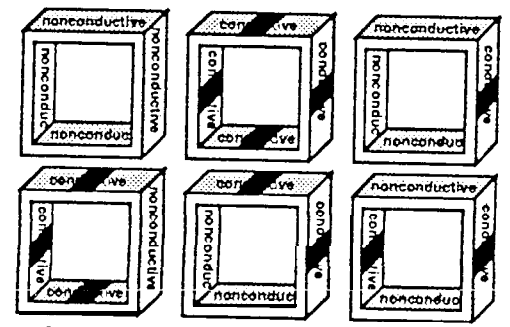

Interconnect Rings

SINGLE PROCESSOR

MULTIPROCESSOR

MIN. INSTRUMENT PROCESSOR

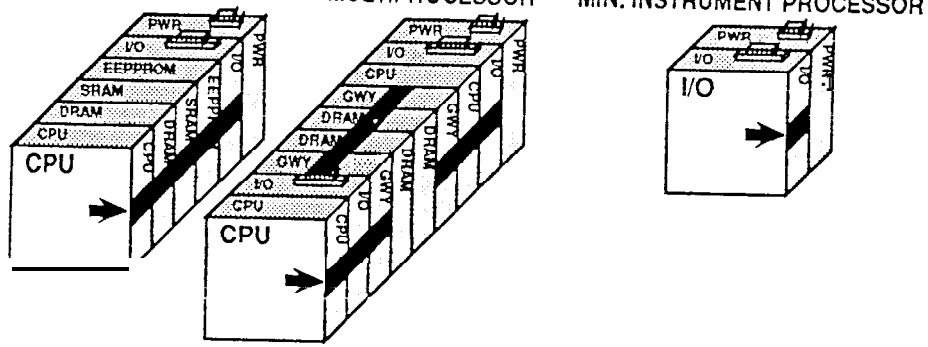

Example

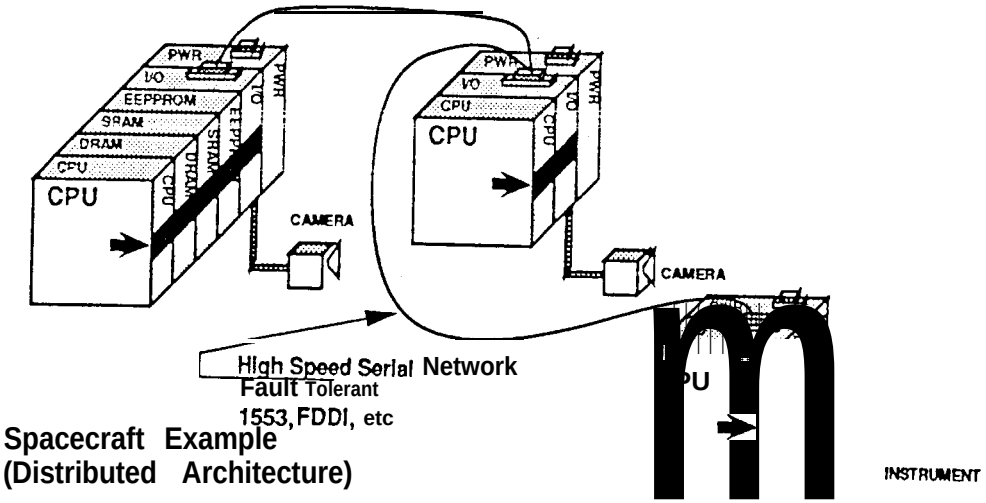

Spacecraft Example
(Distributed Architecture)

FEATURES

- Processor Independent
- Upgradeable
- Maintainable
- Interchangeable Modules
- Can Be Easily Configured To Different Architectures
  - Single String
  - Dual String
  - TMR
  - Multiprocessors
  - Distributed
  - NonDistributed
  - Others
- CPU Module Inheritance from AFC
- Modules Within Manufacture Capability Of Several Vendors
  - LORAL
  - HUGHES
  - nChip
  - Others
- Design Consists of Several Standard Features
  - Module Size
  - Interconnect Bus
  - Interconnect Method

Gary Bolotin

The Space-Cube Architecture

Agenda

- Introduction of the Space - Cube Architecture
- An Implementation of the Space - Cube Architecture using today's technology

The Space-Cube Architecture

Why Modularize?

- Can Take Advantage Of Commercially Available Products
- Resulting System Is Easier To Maintain and Repair
- Encourages:
  - Standard Designs
  - Hardware/Software inheritance
- Modules That Are Used Frequently Enough To Justify The Cost Can Be Miniaturized (i.e. MCM ASIC).
- Smaller Modules Are Easier To Manufacture

The Space-Cube Architecture

Why Stack Modules?

- Resulting Volume Is More Compact
- Interconnect Wire Length Is Minimized
- More Structurally Sound

- The Space-Cube Architecture Is Possible

Road Map For The Future

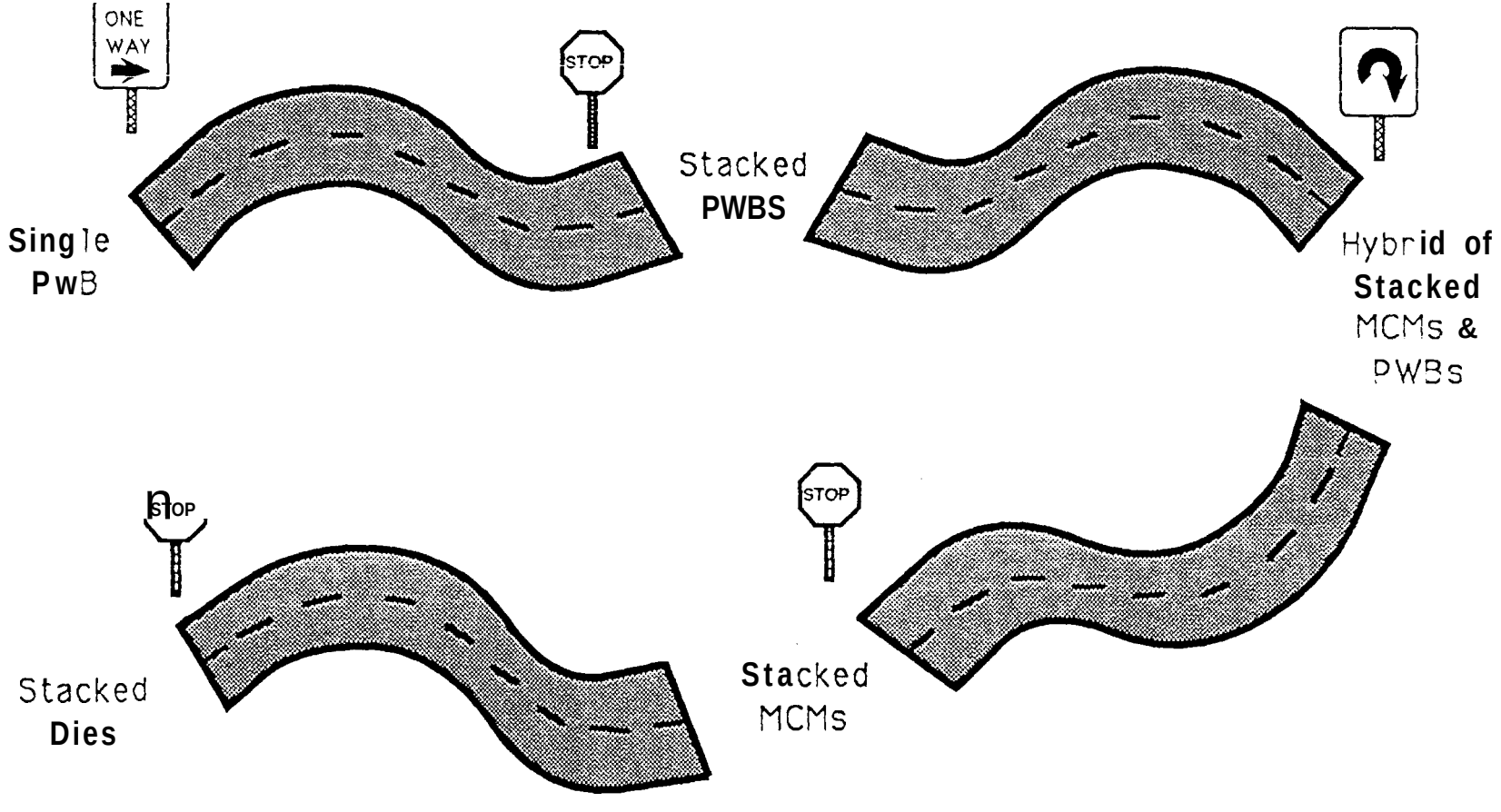

MODULE PACKAGING

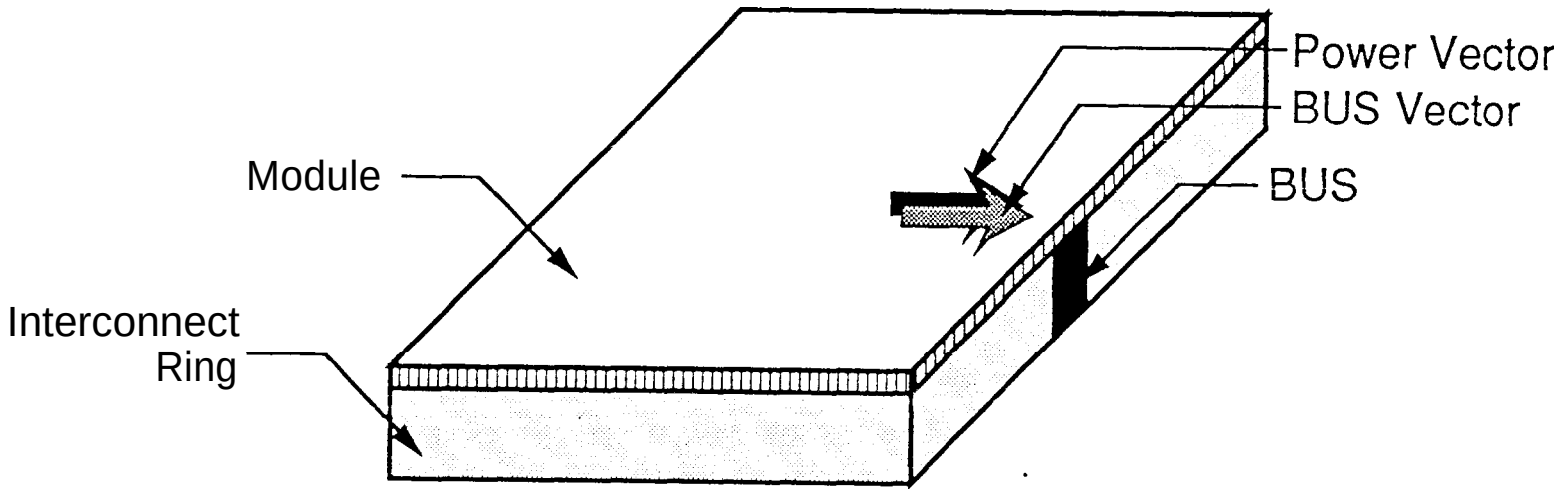

FEATURES

- Regular Polygon (i.e. Triangle, Square, Hexagon, Octagon, etc.)
- Stackable

Interconnect Rings

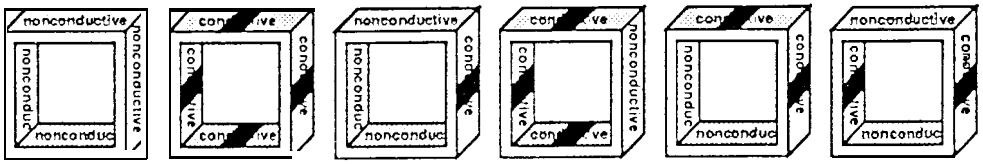

Available Flavors

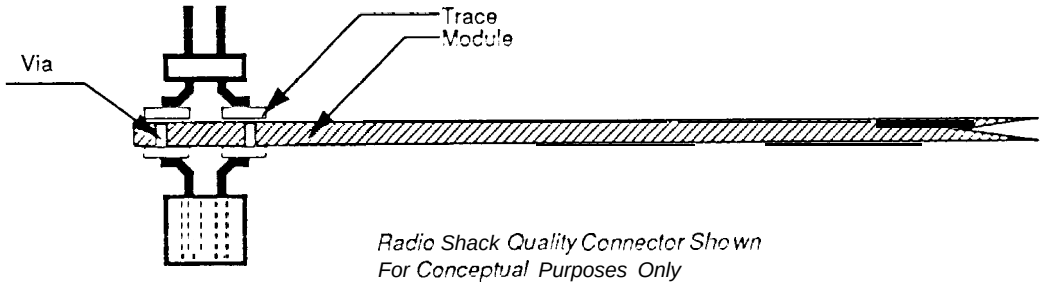

FEATURES

- Provides The Interconnection Between Modules
- Single Bus per Side
- Flexible Interconnection
- Busses May Be Selectively Conducted Or Broken
- Each Flavor allowed in all 4 possible orientations

INTER-MODULE PACKAGING

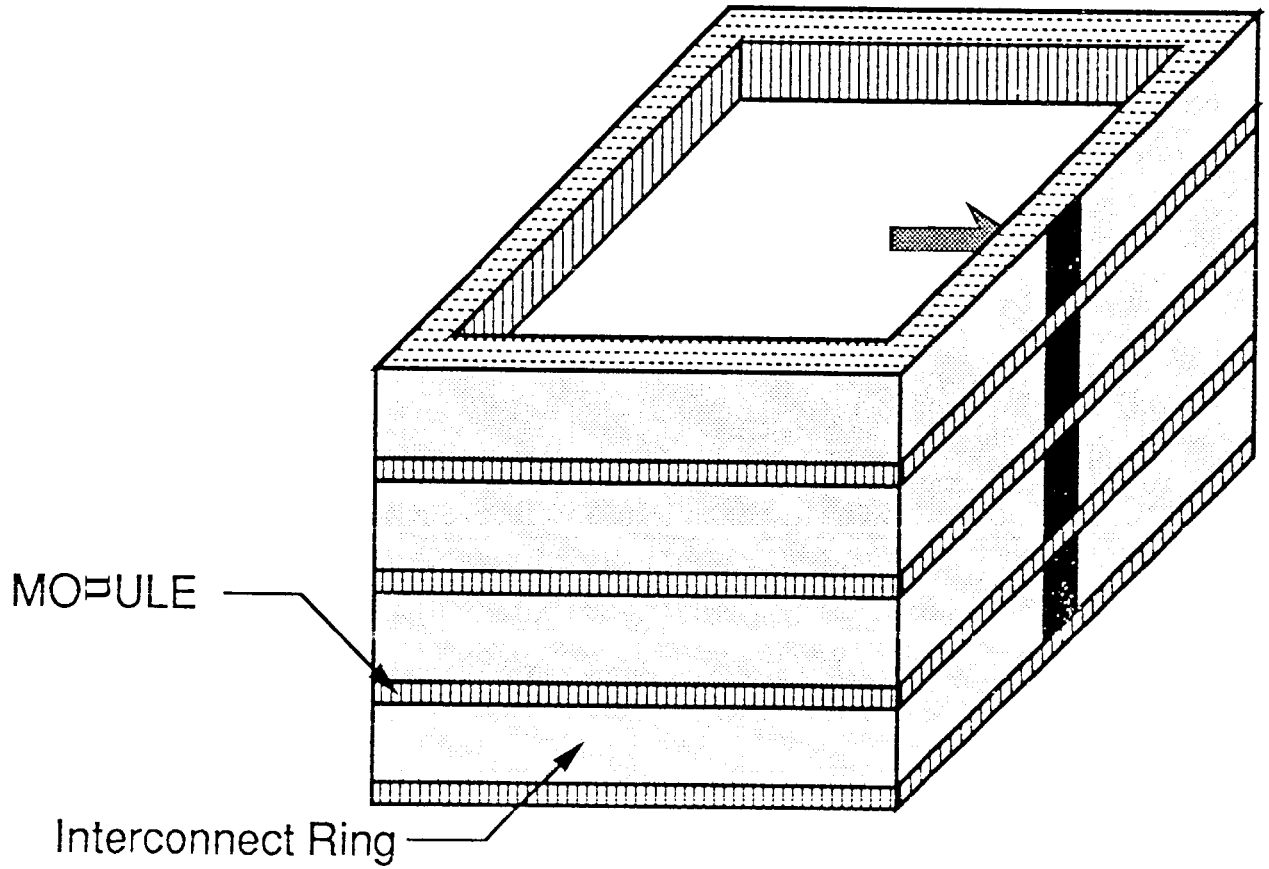

FEATURES

- Single Bus per Side
- Removable Modules
- Flexible Interconnection

SPACE-BUS

REQUIREMENTS

- Must Fit On a Single Side
- Power Pins Must Be Included

OPEN ISSUES

- Fault Tolerant
  - EDAC on Address
  - EDAC on Data
  - Redundant
- Bus Width
- Required Bandwidth
- Standard/ Non-Standard
- Multiplexed / Non-Multiplexed
- Support Multiple Masters
- Number Of Pins

Gateway

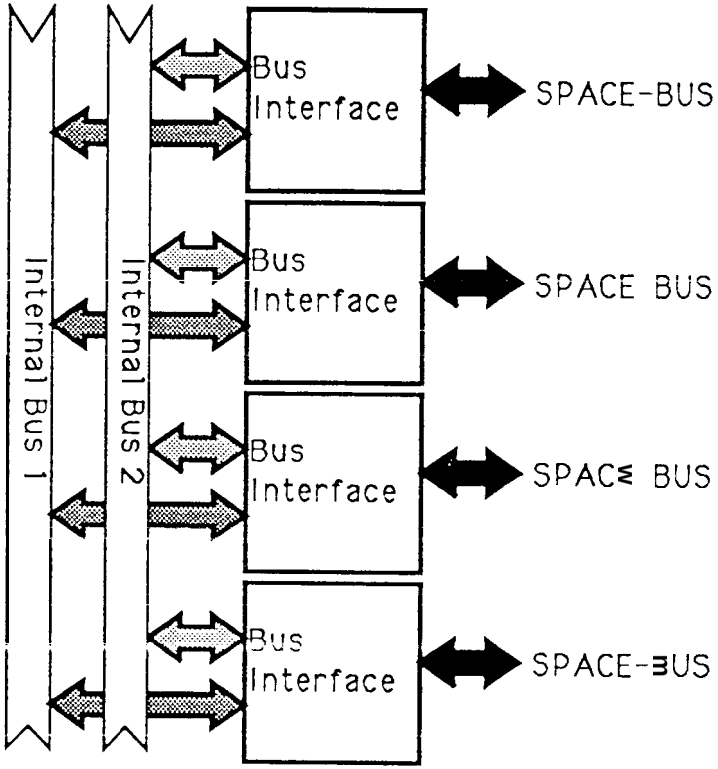

FEATURES

- Allows for up to 2 Concurent Connections
- Arbitration done on a cycle by cycle basis
- Latency equal to two buffer delays if not blocked

Super Gateway

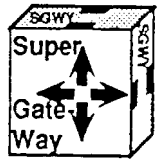

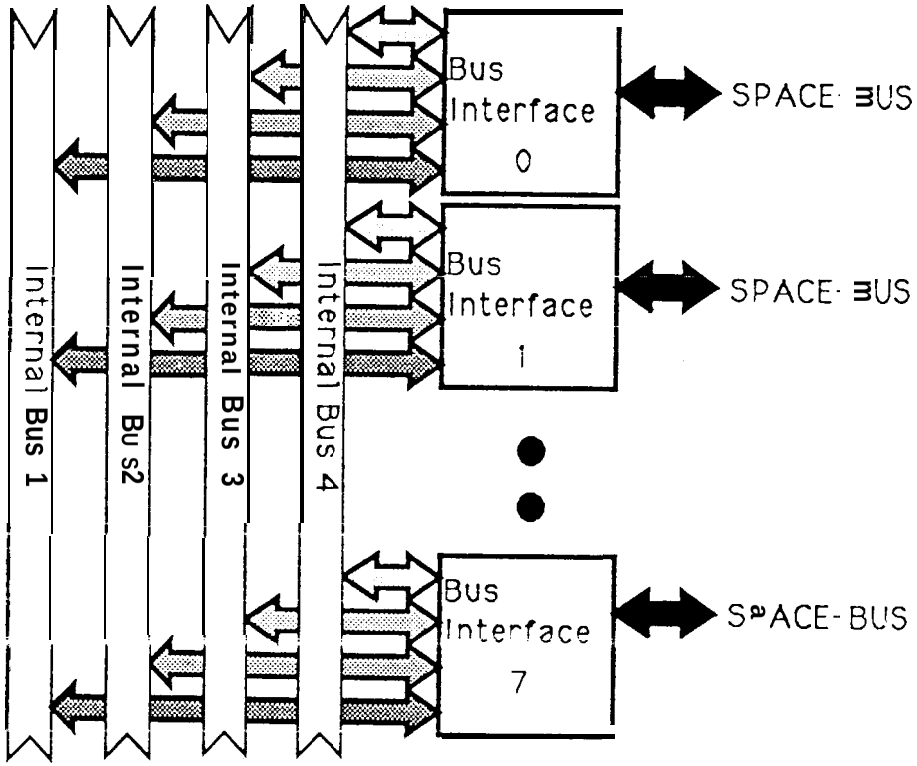

FEATURES

- Allows for up to 4 Concurent Connections
- Arbitration done on a cycle by cycle basis
- Latency equal to two buffer delays if not blocked

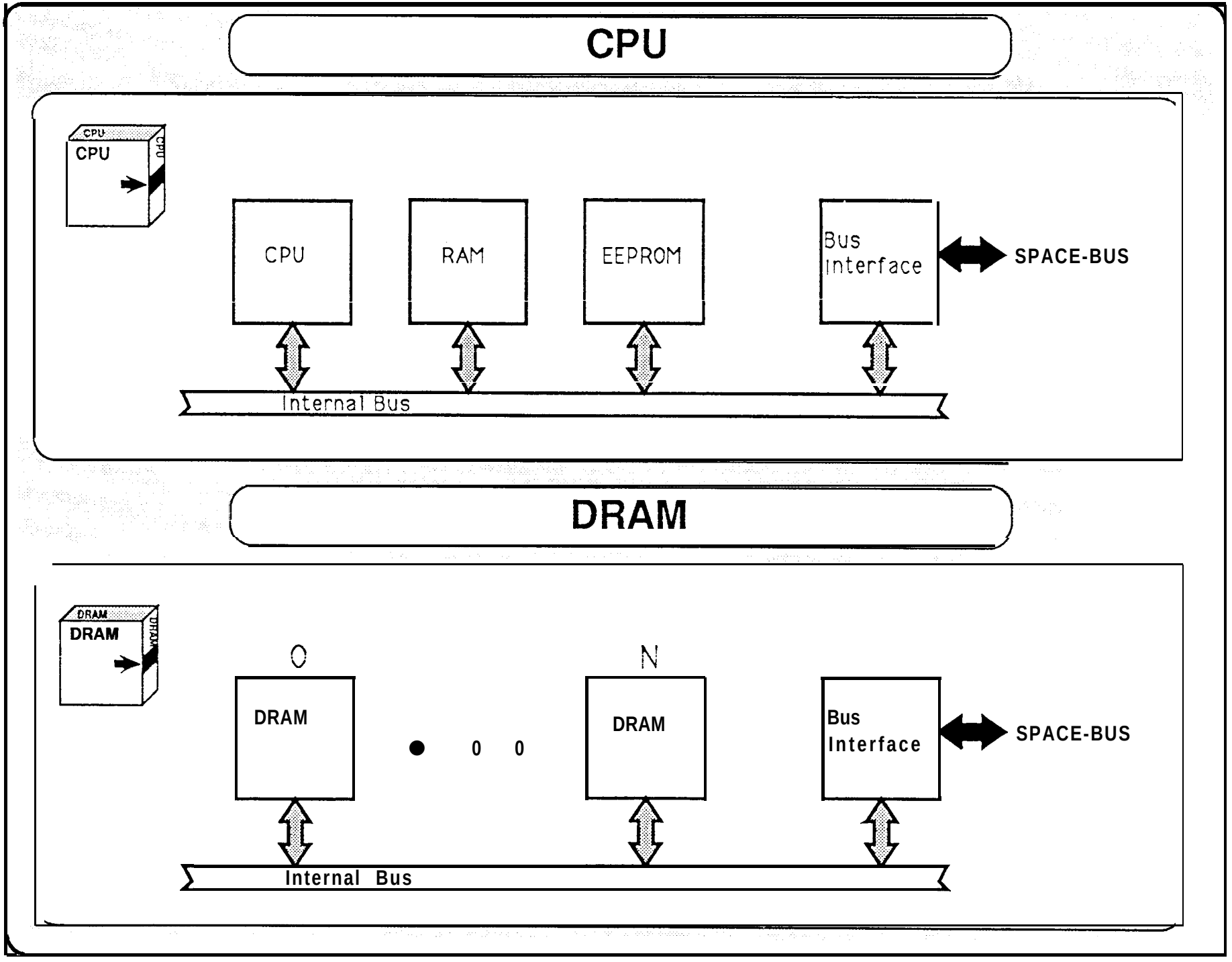
CPU
CPU
CPU
CPU
CPU
RAM
EEPROM
Bus
Interface
SPACE-BUS
Internal Bus
DRAM
DRAM
DRAM
0
N
DRAM
DRAM
Bus
Interface
SPACE-BUS
Internal Bus

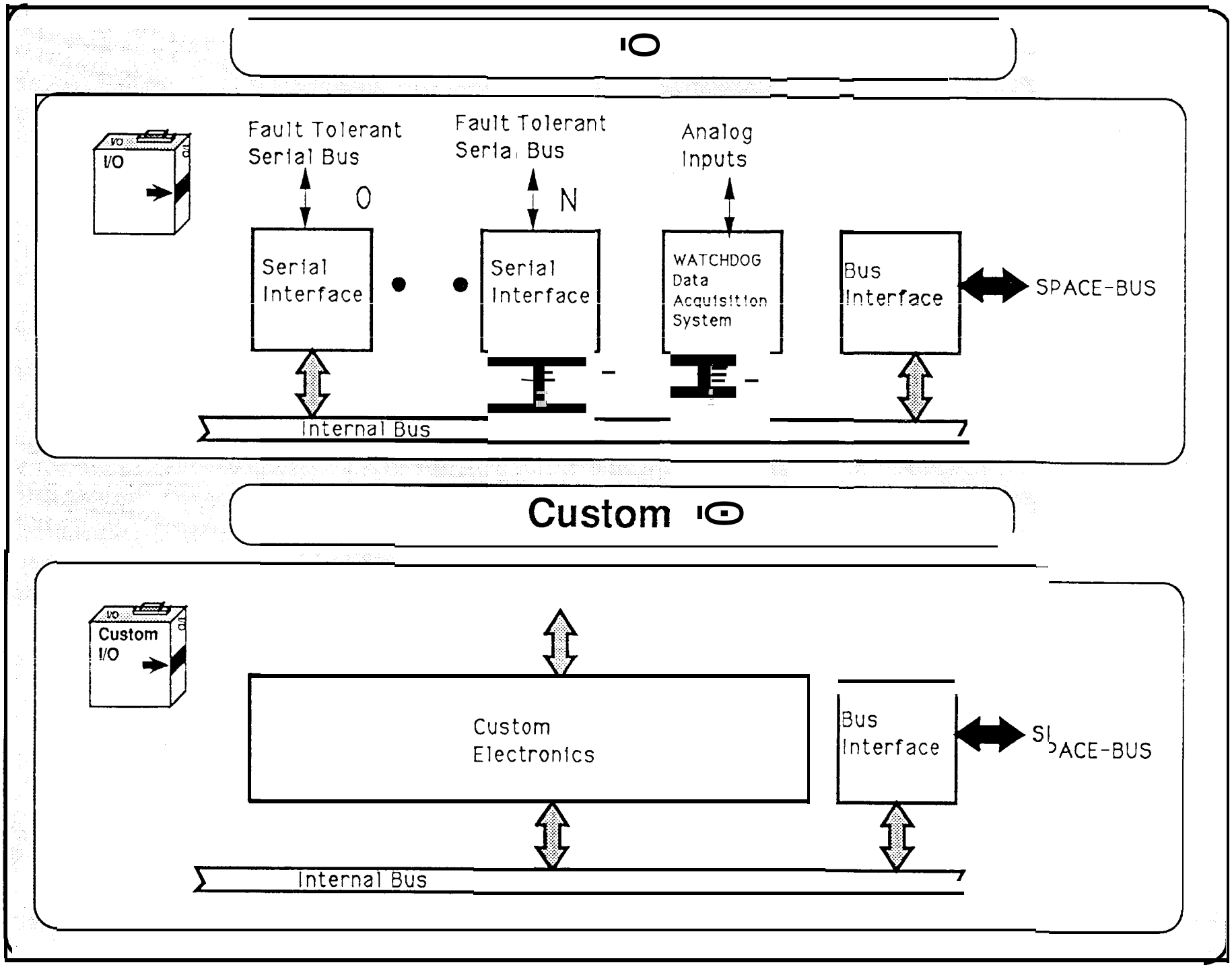
I/O
Fault Tolerant Serial Bus
0
Fault Tolerant Serial Bus
N
Analog Inputs
I/O
Serial Interface
Serial Interface
WATCHDOG Data Acquisition System
Bus Interface
SPACE-BUS
Internal Bus
Custom I/O
Custom I/O
Custom Electronics
Bus Interface
SPACE-BUS
Internal Bus

Single String Example

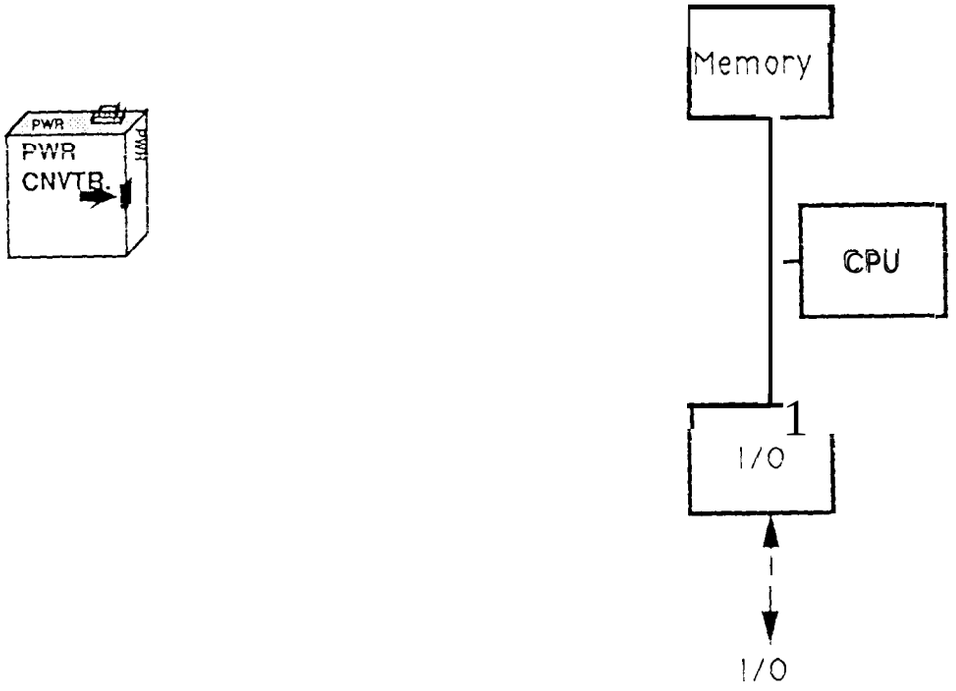

FEATURES

- Single String Architecture
- ***Nothing*** New ***Here***

Single String Example

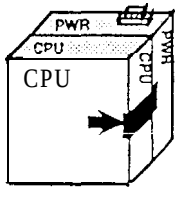

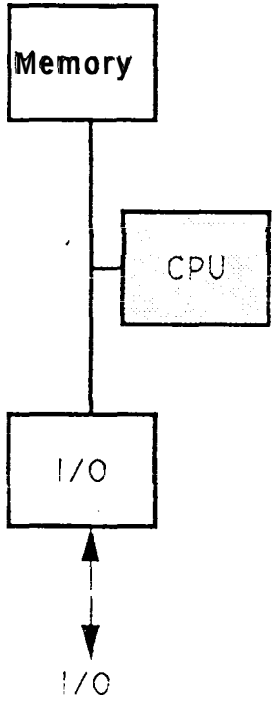

FEATURES

- Single String Architecture
- ***Nothing New Here***

Single String Example

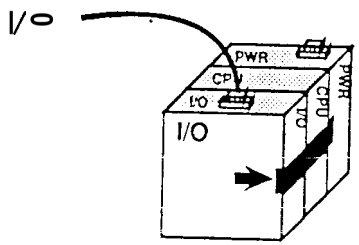

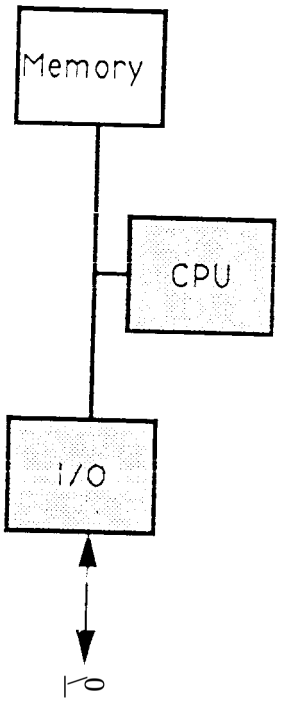

FEATURES

- Single String Architecture
- *Nothing New Here*

Single Str'ng Exampl

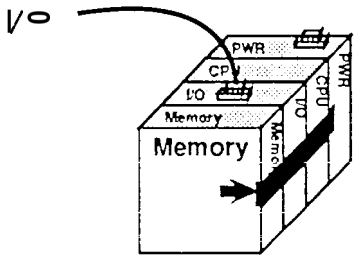

FEATUR=S

- Single String ^rchitectu re
- *Nothing New Here*

Dual String Example

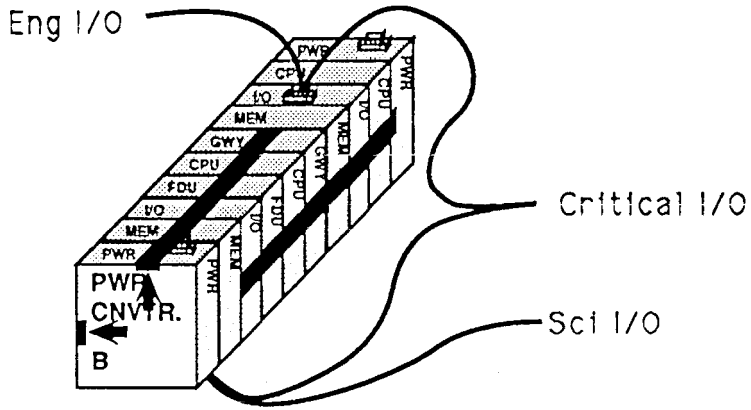

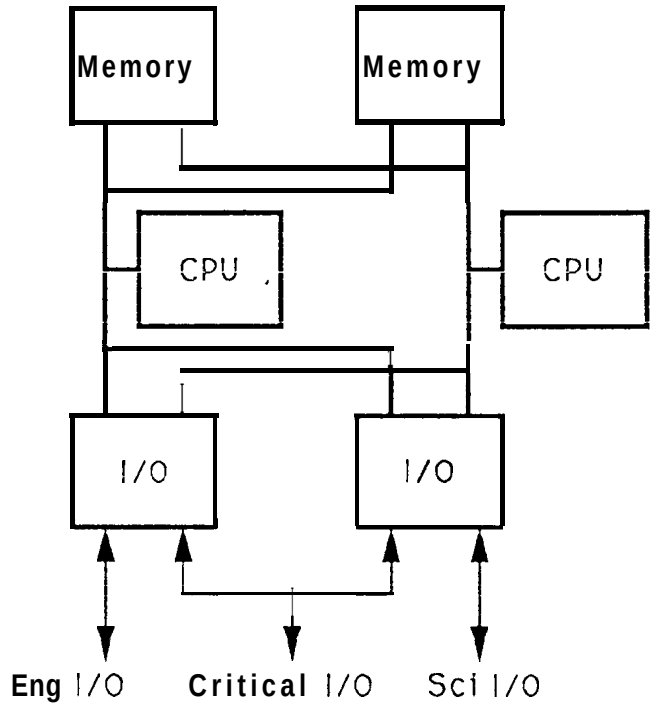

NOTE: 1). FDU controls gateway.
2). Gateway and FDU can be merged into one module.
3). Redundant fdus and gateways could be used.

FEATURES

- Dual String Architecture; Each With Own Bus
- All With No Crossing **Wires!!!**

Dual String Example

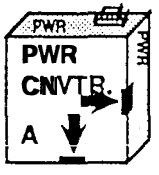

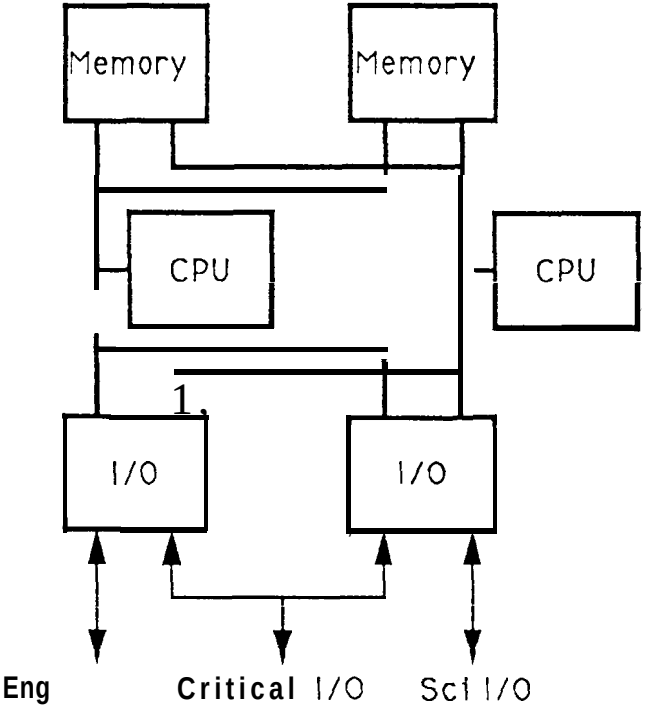

FEATURES

- Dual String Architecture; Each With Own Bus
- All With No Crossing **Wires!!!**

Dual String Example

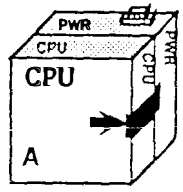

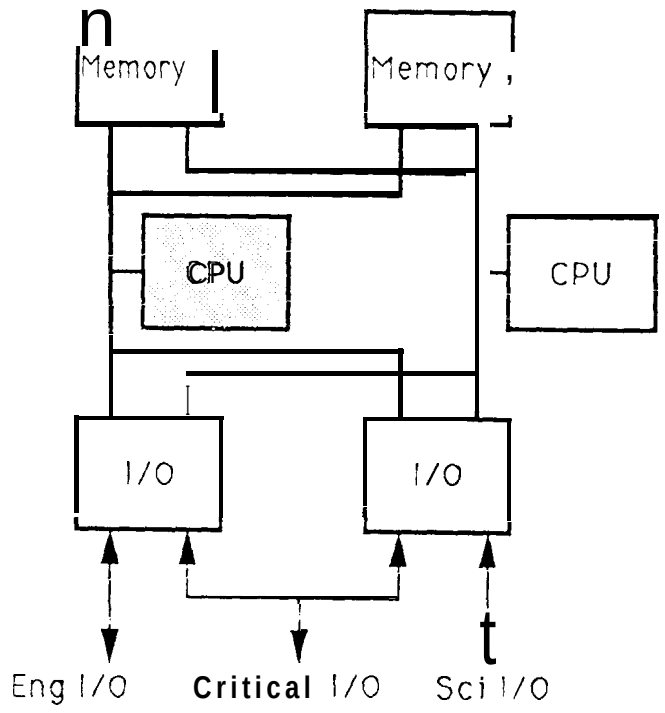

FEATURES

- Dual **String** Architecture; Each With Own Bus
- All With No Crossing **Wires!!!**

Dual String Example

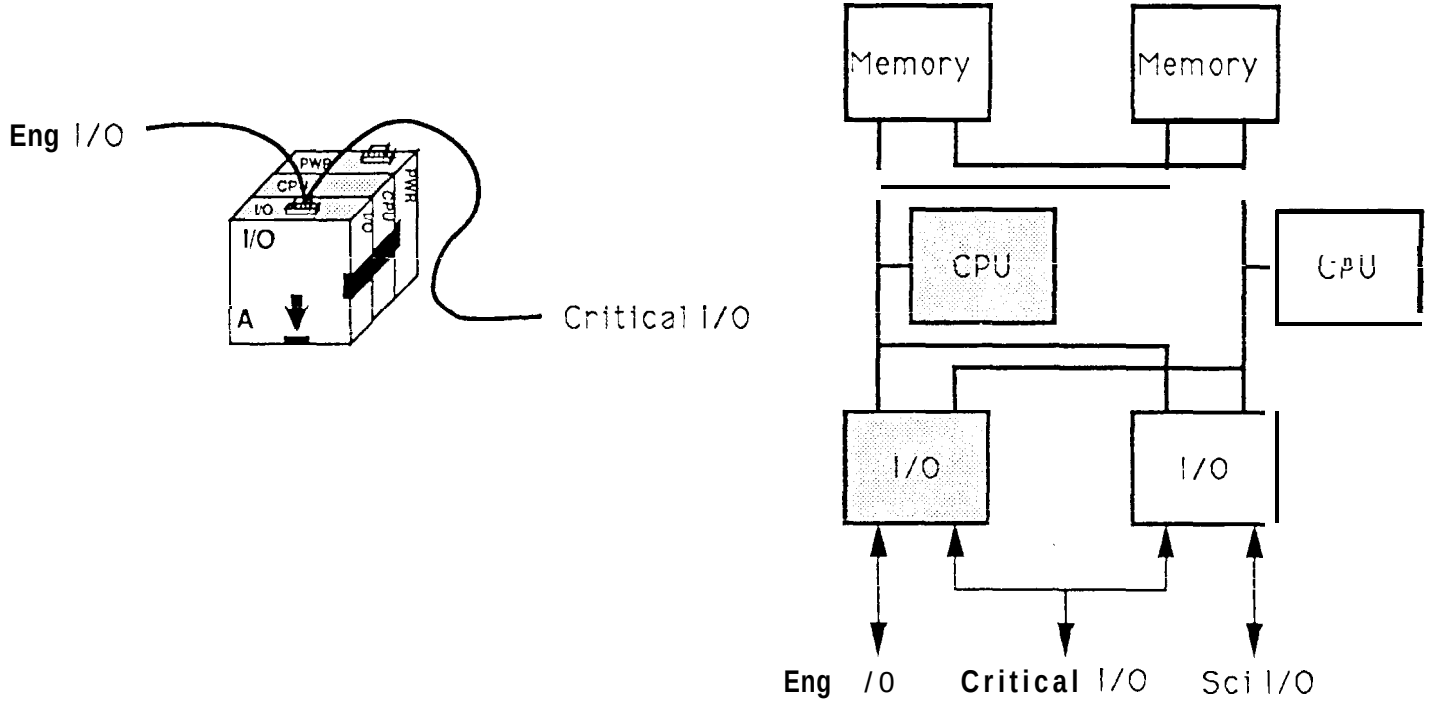

FEATURES

- Dual String Architecture; Each With Own Bus
- All With No Crossing **Wires!!!**

Dual String Example

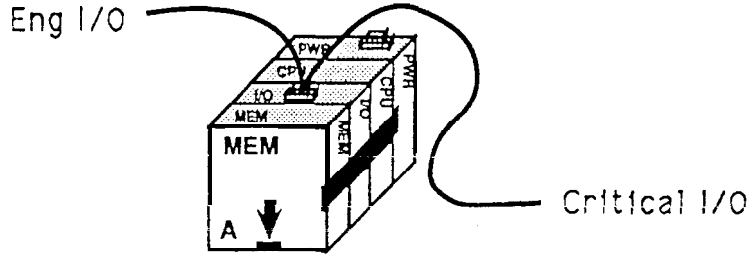

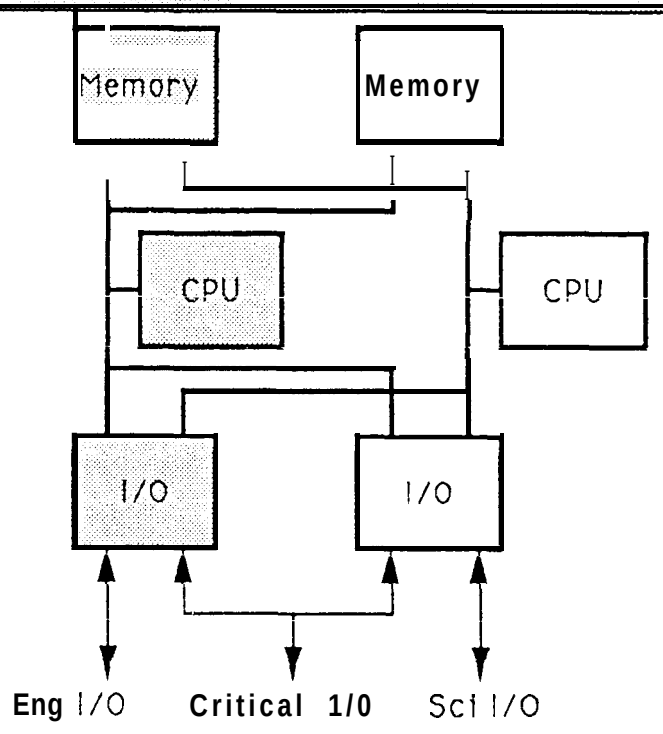

FEATURES

- Dual String Architecture; Each With Own Bus
- All With No Crossing **Wires!!!**

Dual String Example

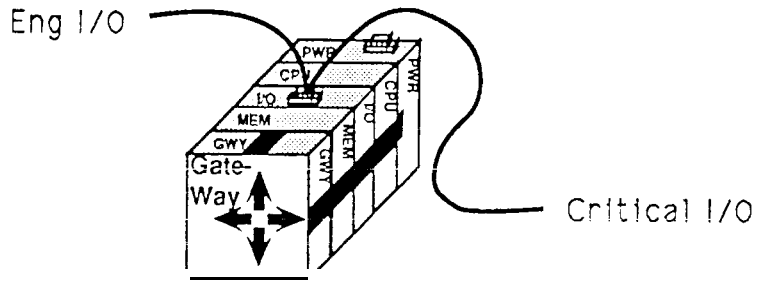

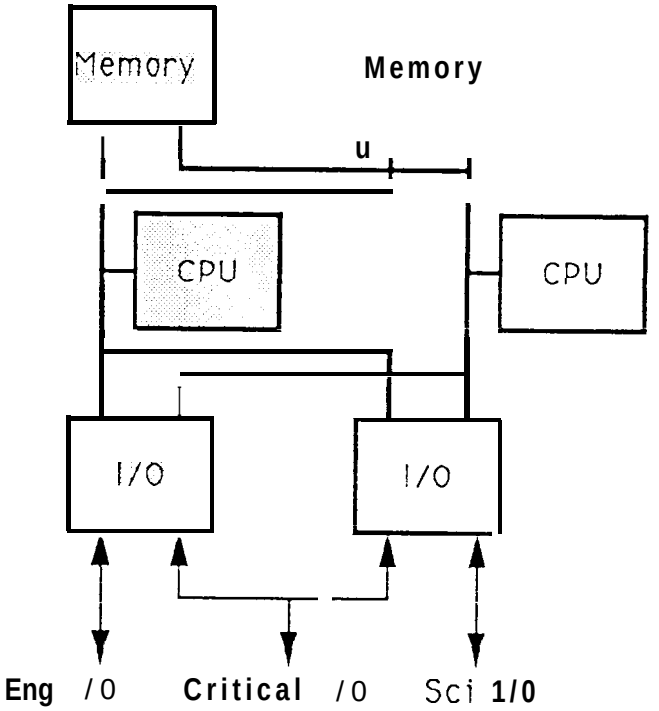

FEATURES

- Dual String Architecture; Each With Own Bus
- All With No Cross ng Wires!!!

Dual String Example

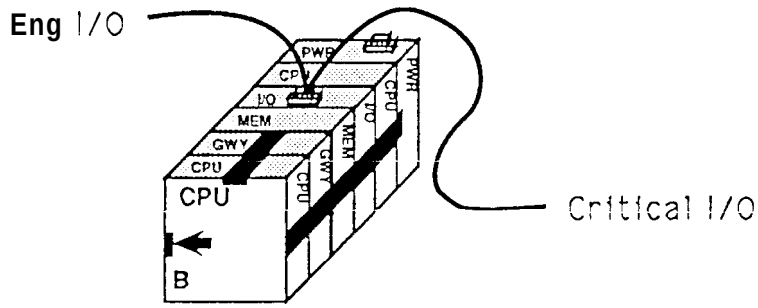

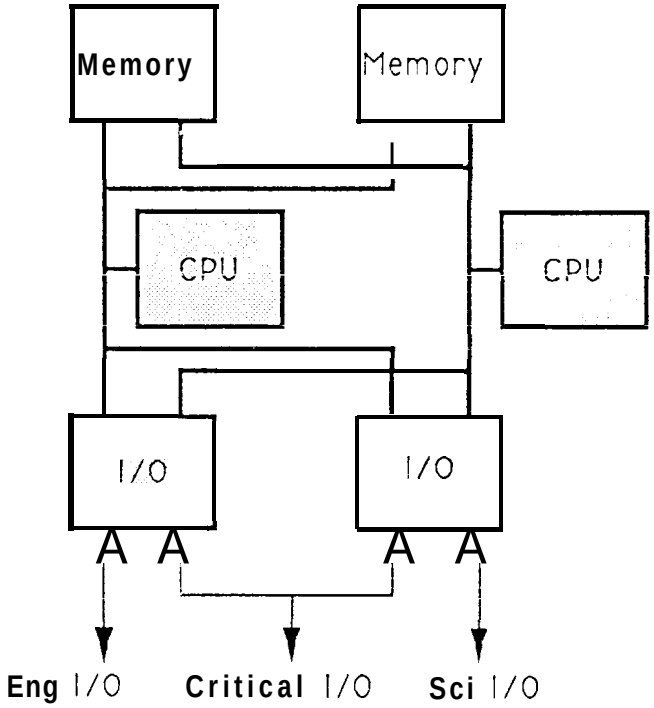

FEATURES

- Dual String Architecture; Each With Own Bus
- All With No Crossing **Wires!!!**

Dual String Example

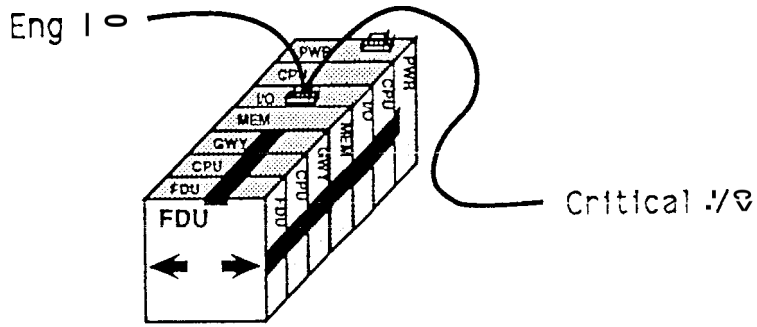

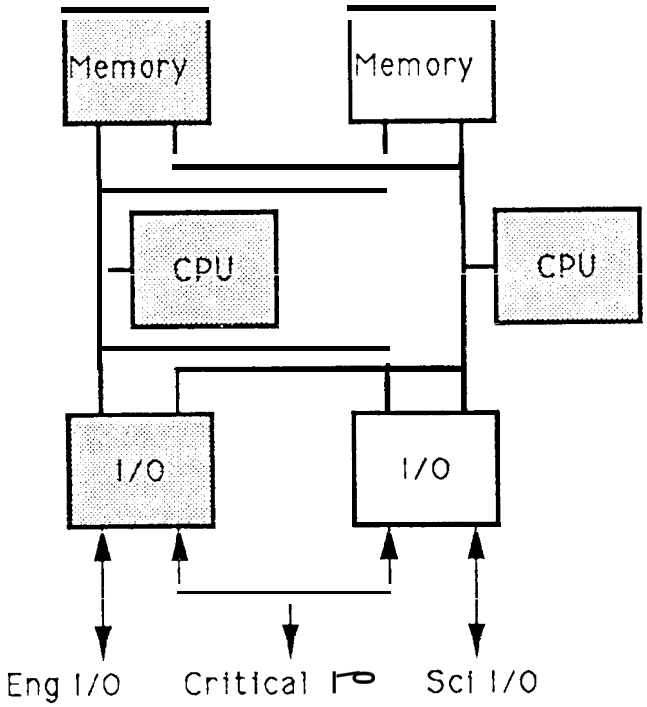

FEATURES

- Dual String Architecture; Each With Own Bus
- All With No Crossing Wires!!!

Dual String Example

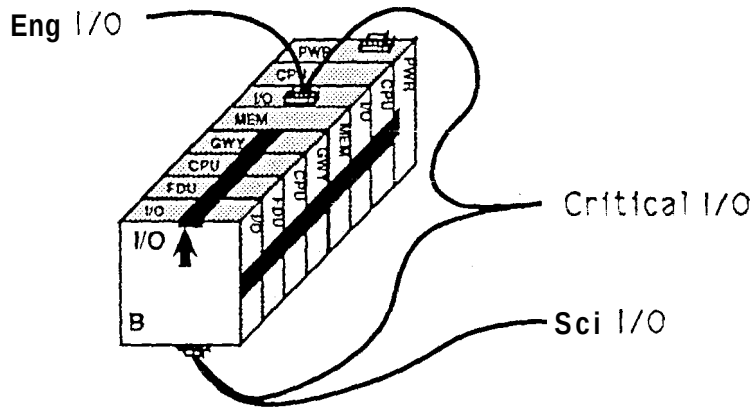

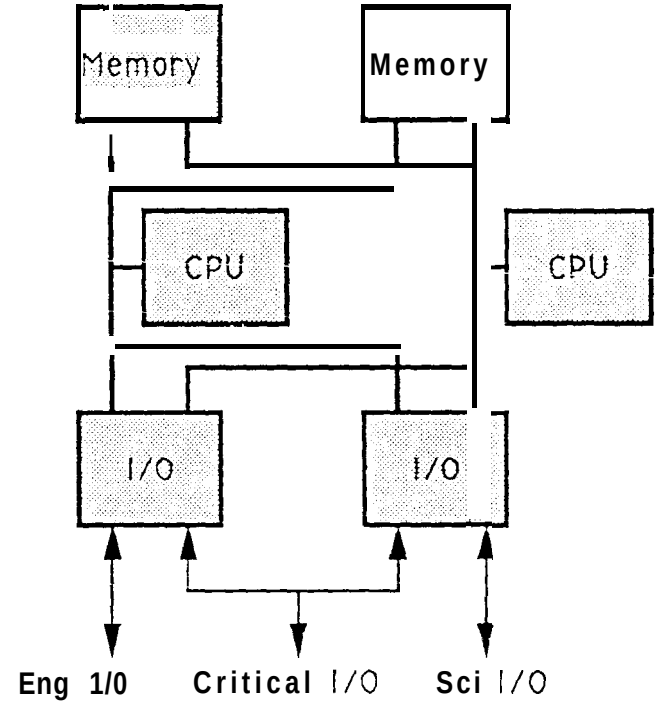

FEATURES

- Dual String Architecture; Each With Own Bus
- All With No Crossing **Wires!!!**

Dual String Example

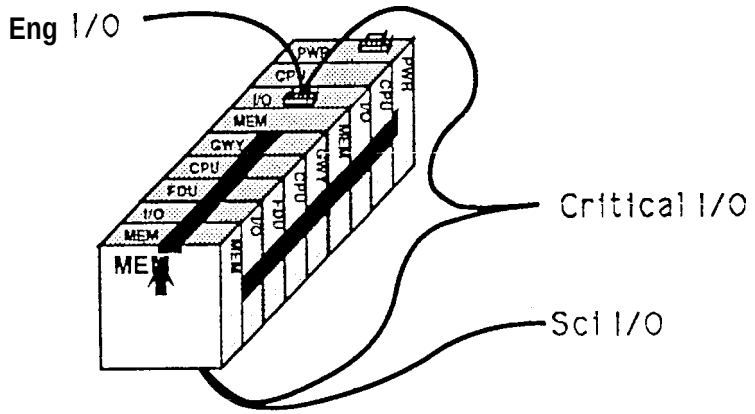

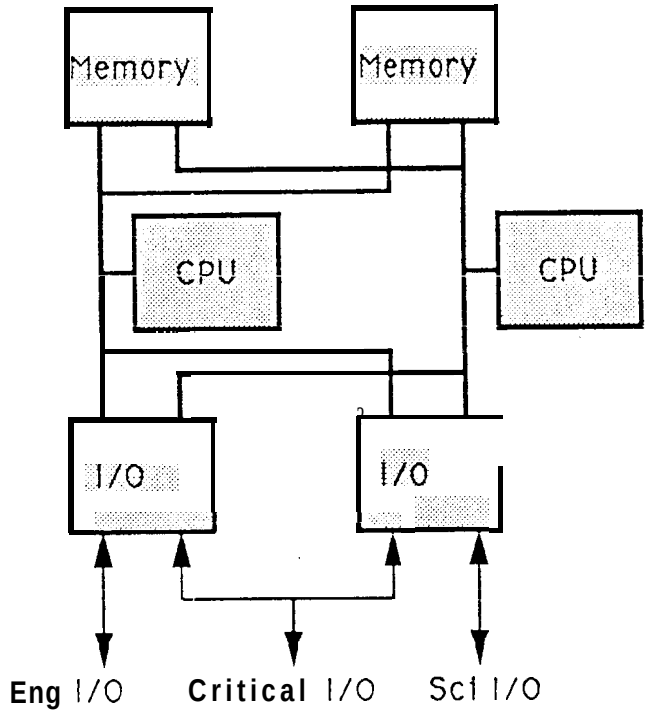

FEATURES

- Dual String Architecture; Each With Own Bus
- All With No Crossing **Wires!!!**

Dual String Example

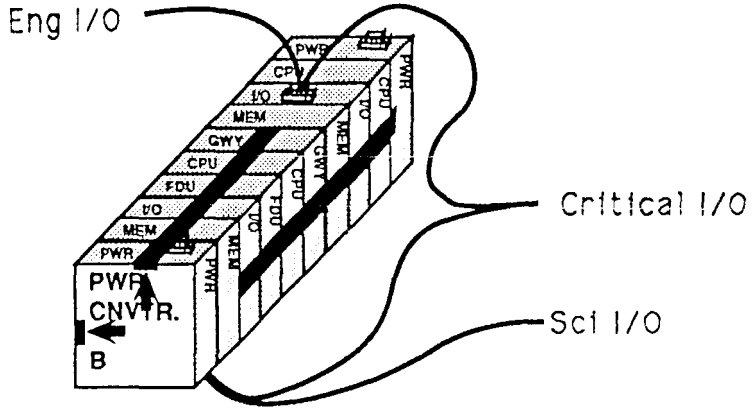

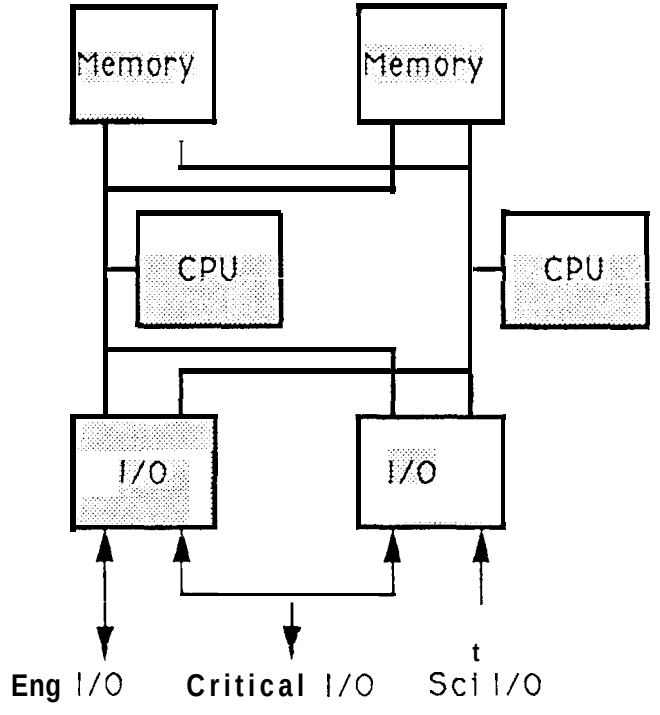

NOTE: 1). FDU controls gateway.
2). Gateway and FDU can be merged into one module.
3). Redundant fdus and gateways could be used

FEATURES

- Dual String Architecture; Each With Own Bus
- All With No Crossing **Wires!!!**

Triple Module Redundant

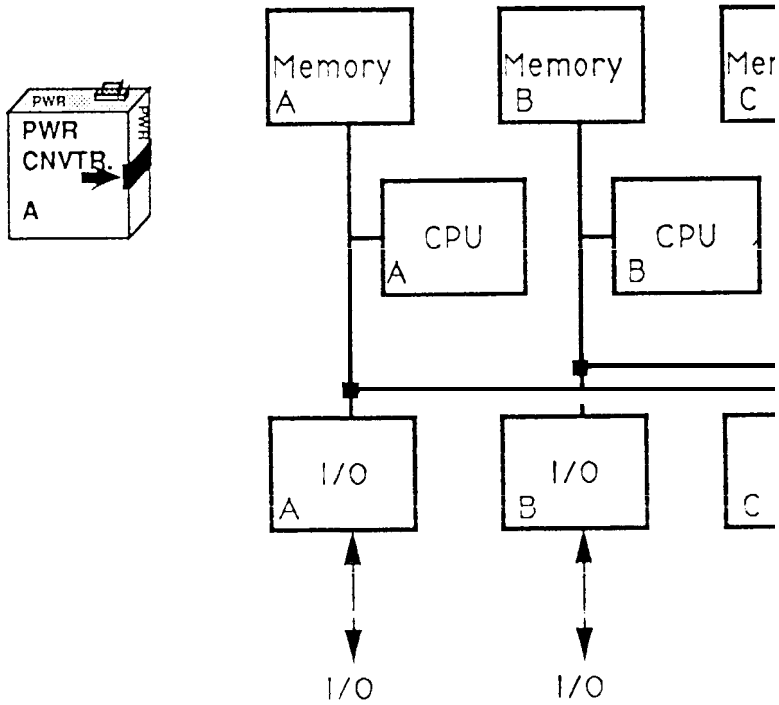

FEATURES

- Triple String Architecture
- Each String Has Its Own Bus
- *Simple & Easy*

Triple Module Redundant

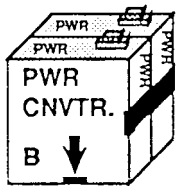

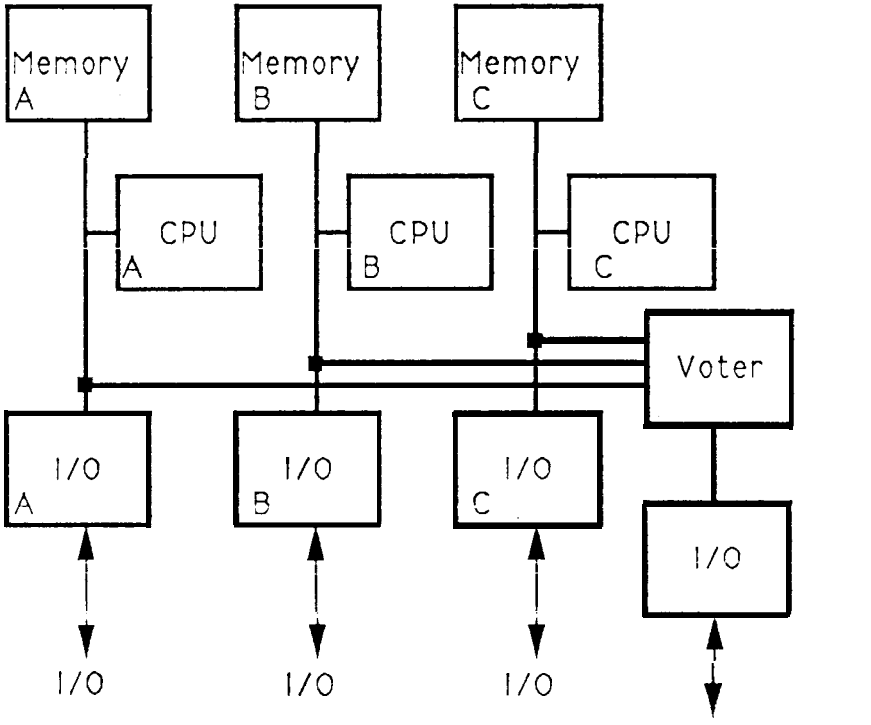

‘ FEATURES

- Triple String Architecture
- Each String Has Its Own Bus
- ***Simple& Easy***

Triple Module Redundant

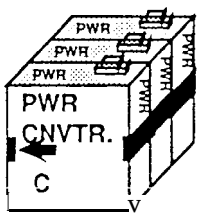

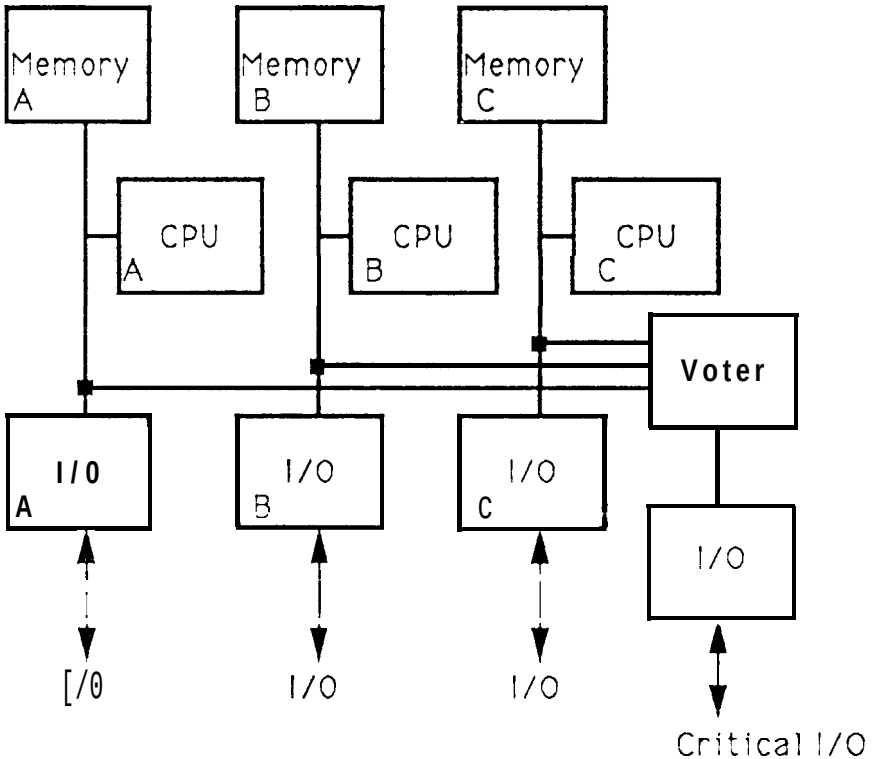

FEATURES

- Triple String Architecture
- Each String Has Its Own Bus
- ***Simple& Easy***

Triple Module Redundant

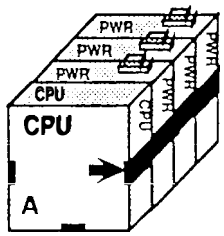

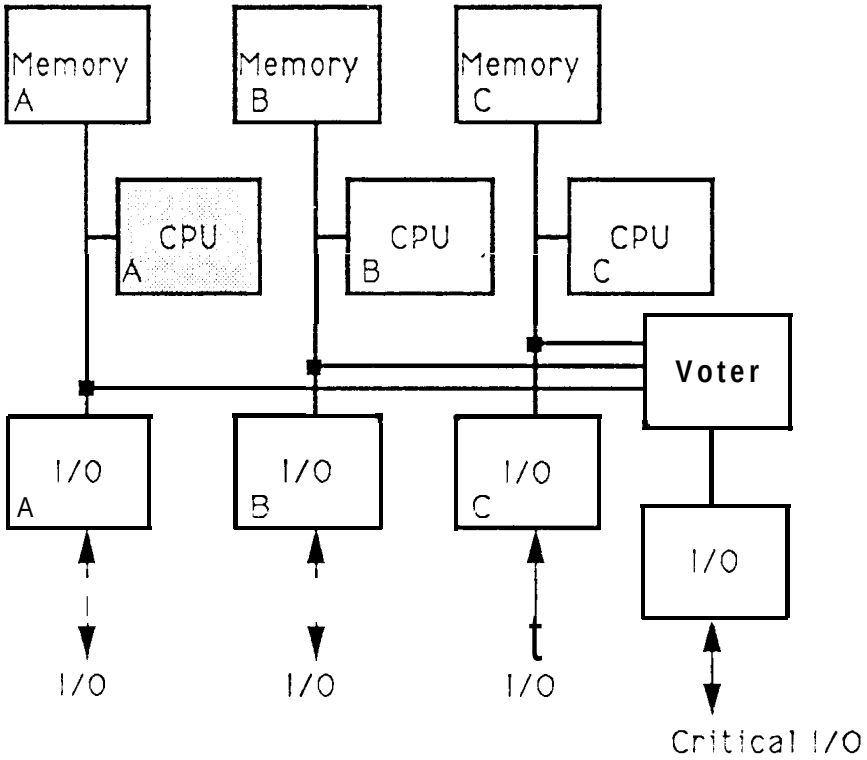

FEATURES

Triple String Architecture
Each String Has Its Own Bus
Simple & Easy

Triple Module Redundant

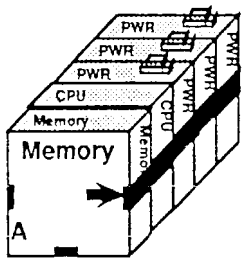

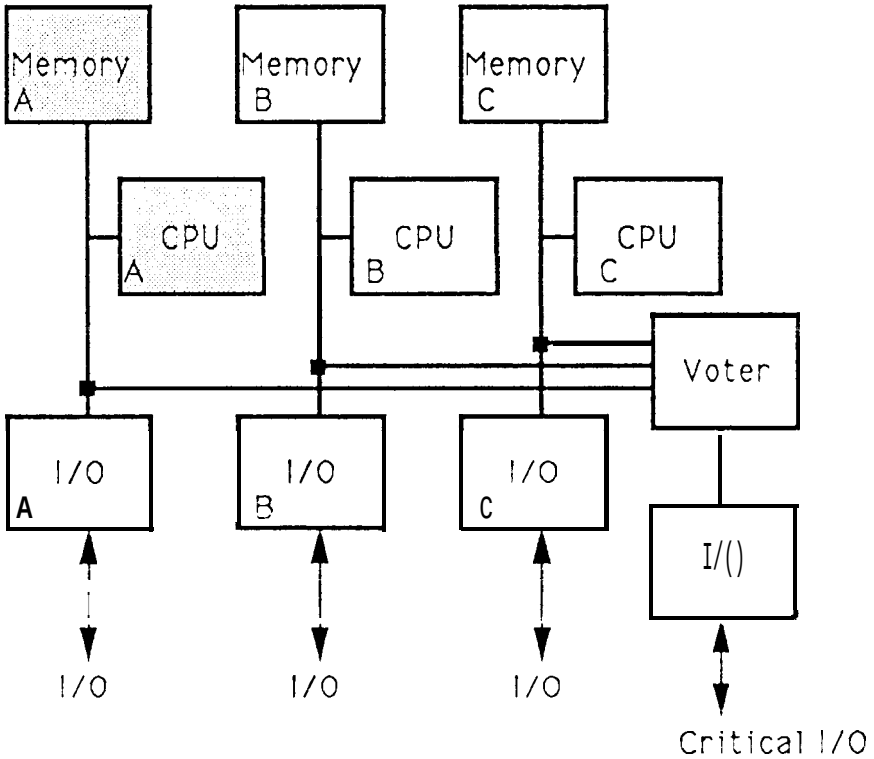

FEATURES

- Triple String Architecture
- Each String Has Its Own Bus
- ***Simple & Easy***

Triple Module Redundant

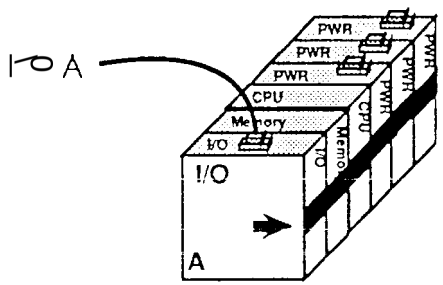

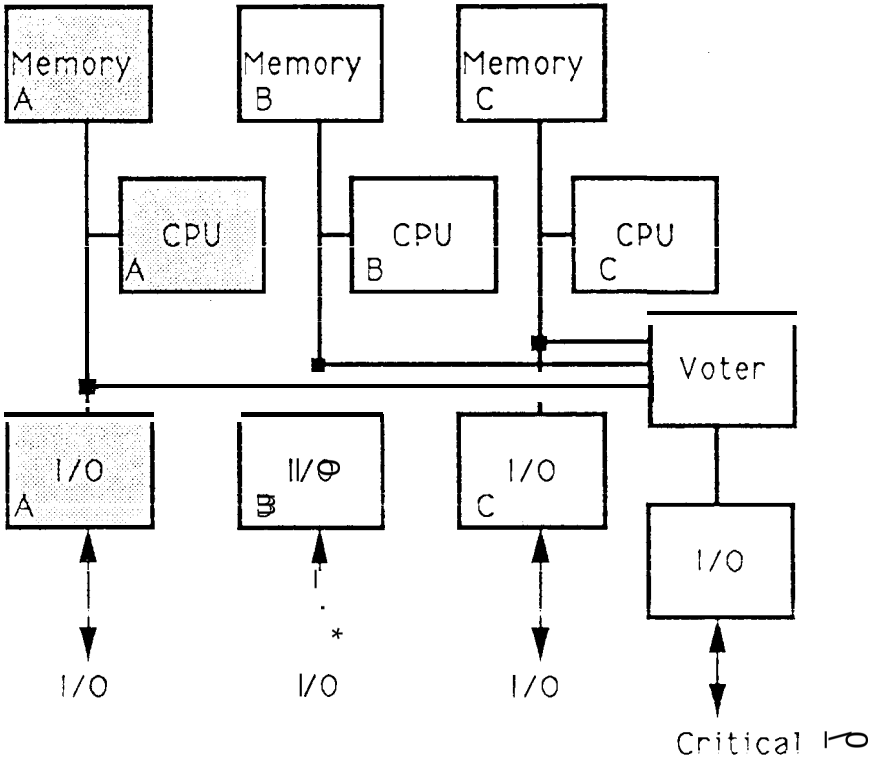

FEATURES

- Triple String Architecture
- Each String Has Its Own Bus
  Simple & Easy

Triple Module Redundant

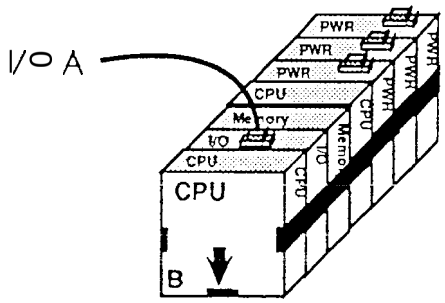

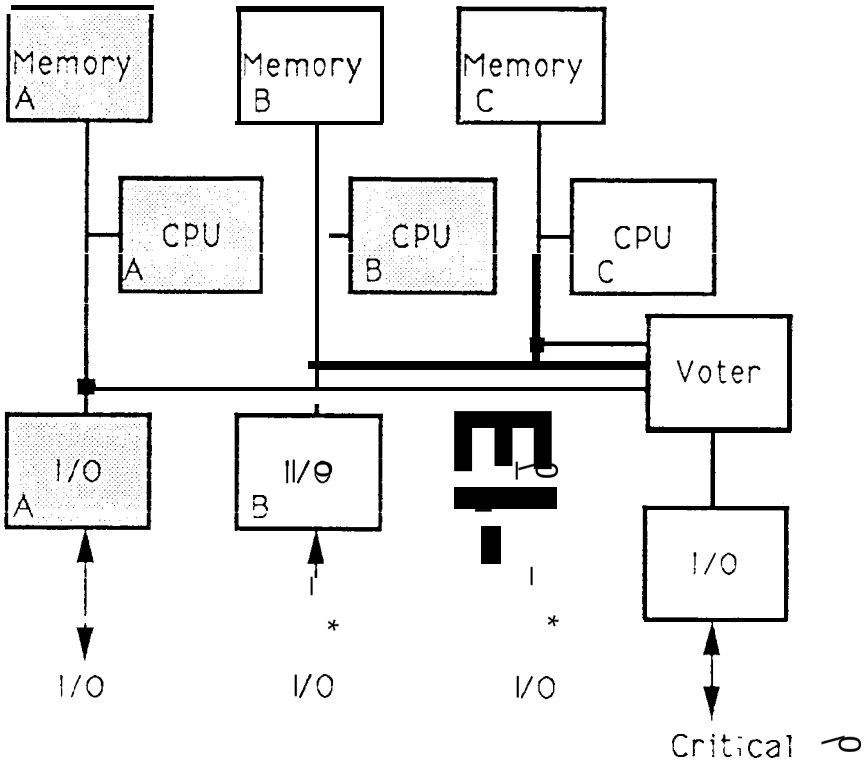

FEATURES

- Triple String Architecture
  Each String Has Its Own Bu
- *Simple & Easy*

Triple **Module** Redundant

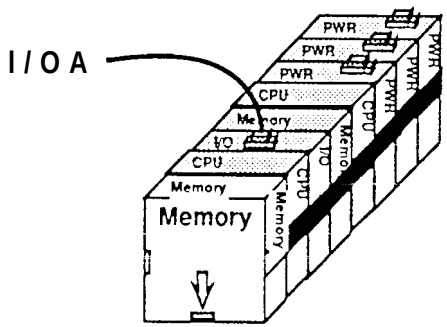

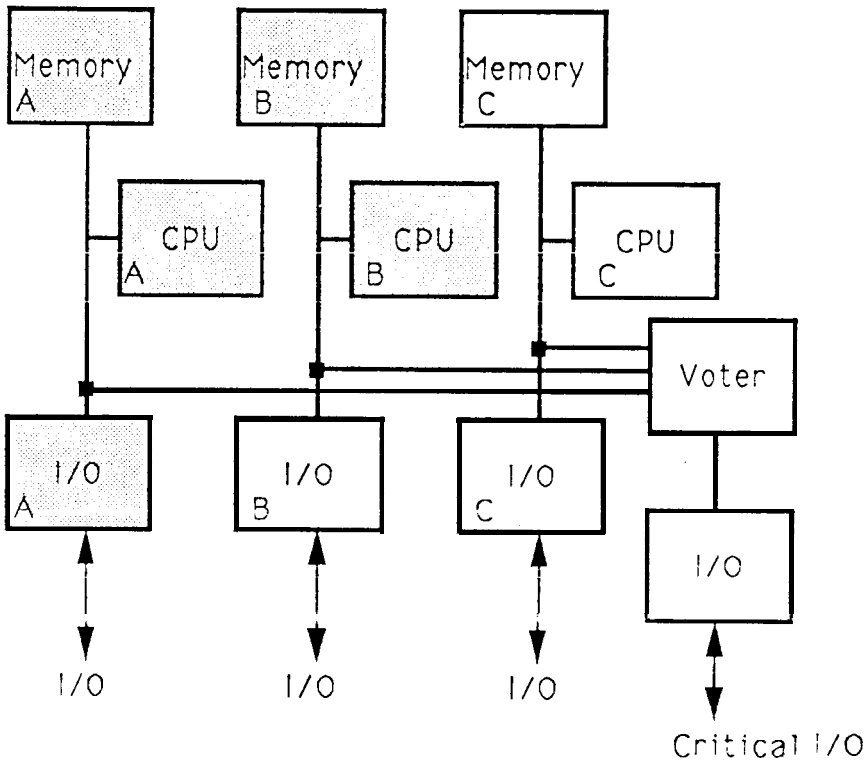

FEATURES

- Triple String Architecture
- Each String Has Its Own Bus
- ***Simple& Easy***

Triple Module Redundant

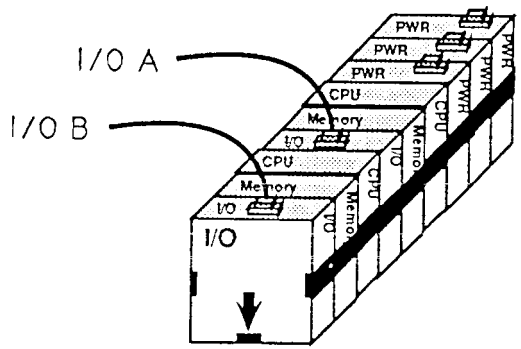

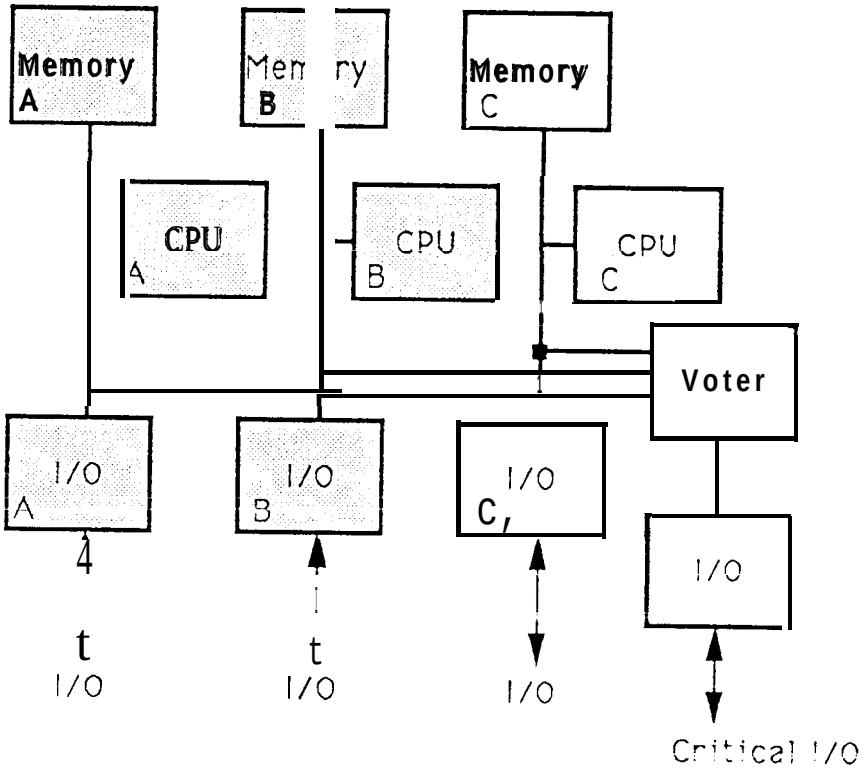

FEATURES

- Triple String Architecture
- Each String Has Its Own Bus
- ***Simple& Easy***

Triple Module Redundant

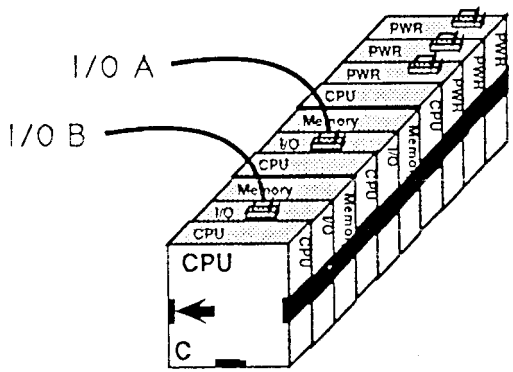

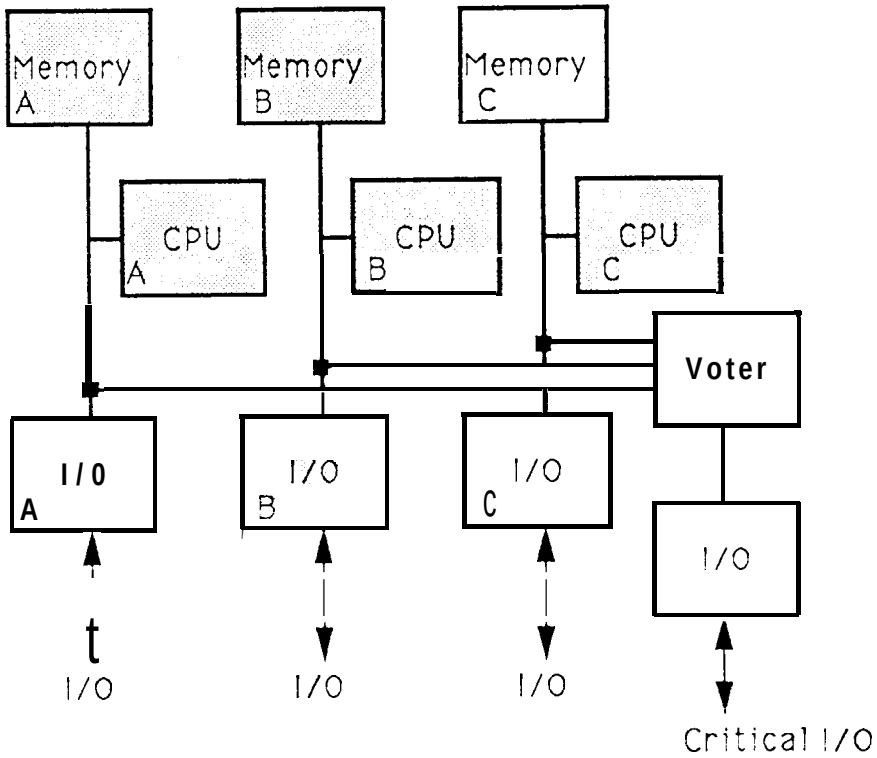

FEATURES

- Triple String Architecture
- Each String Has Its Own Bus
- ***Simple & Easy***

Triple Module Redundant

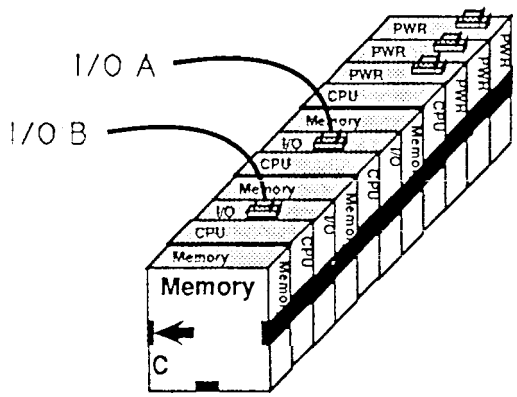

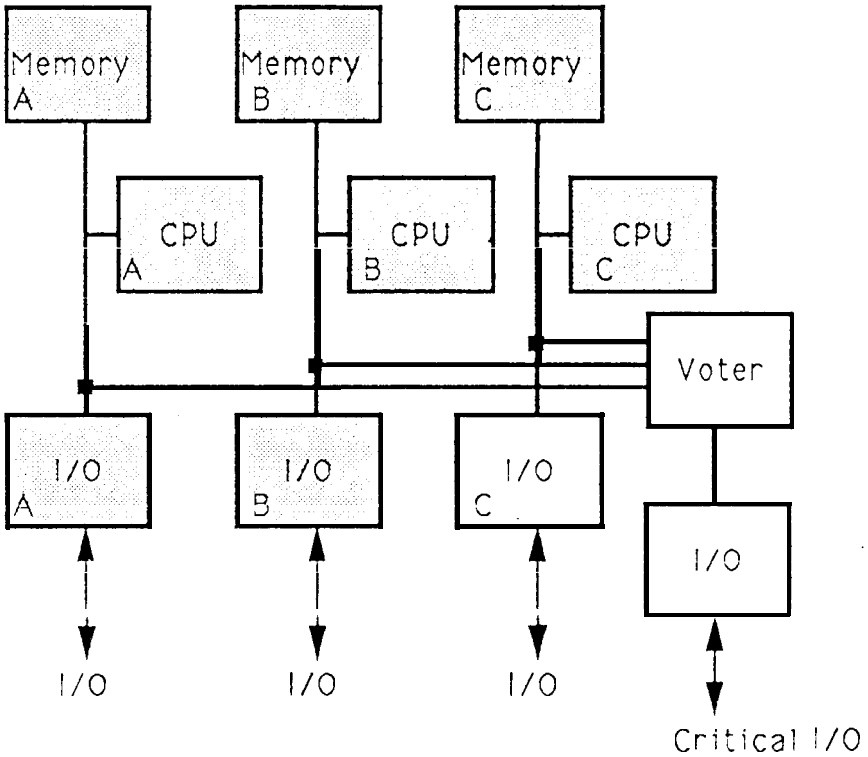

FEATURES

- Triple String Architecture
- Each String Has Its Own Bus
- ***Simple& Easy***

Triple Module Redundant

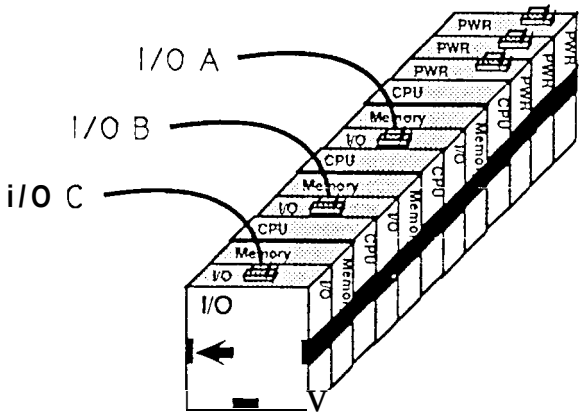

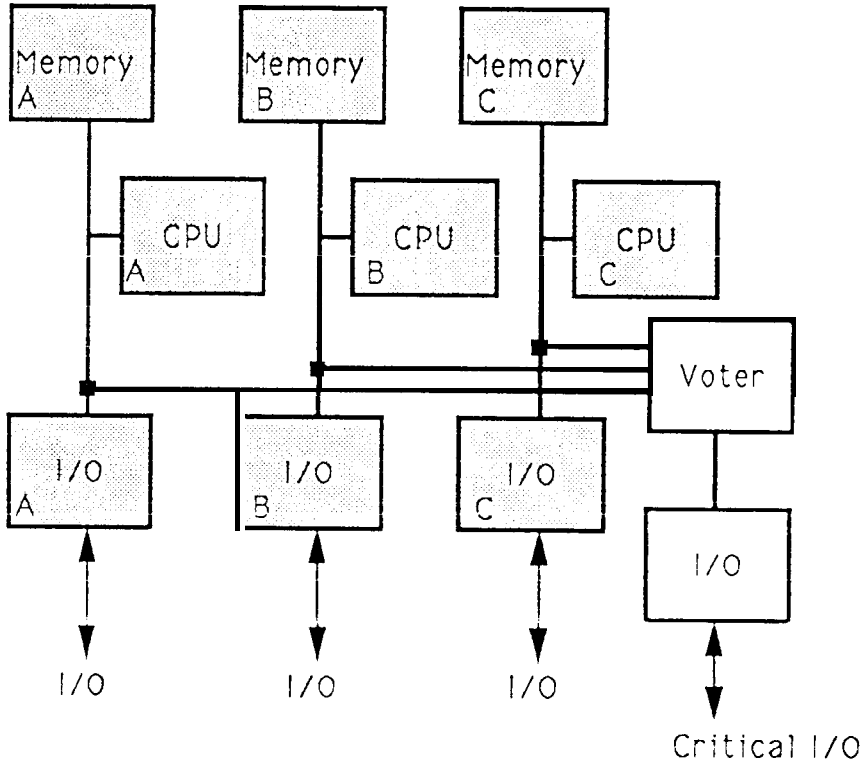

FEATURES

- Triple String Architecture
- Each String Has Its Own Bus
- ***Simple & Easy***

Triple Module Redundant

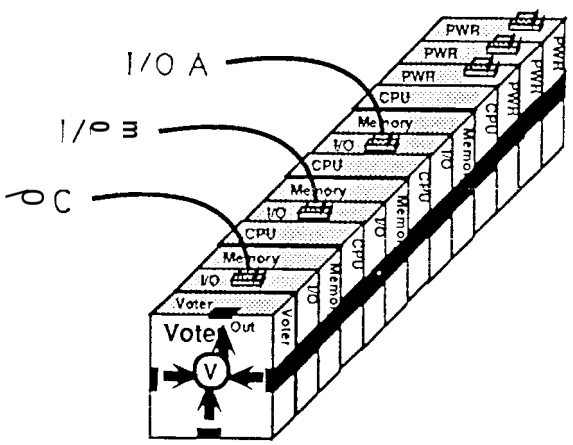

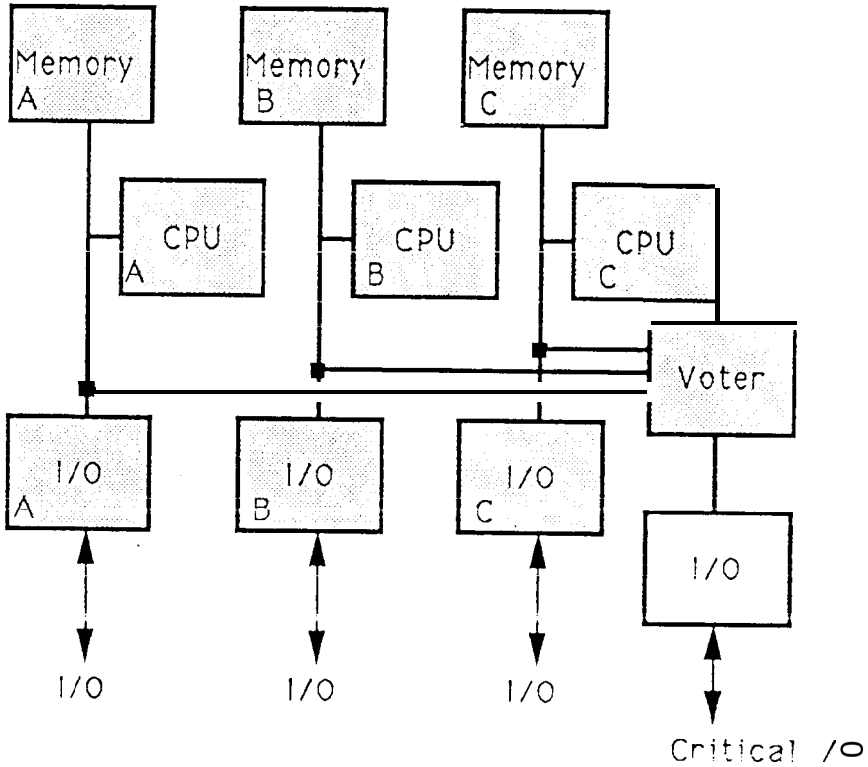

FEATURES

- Triple String Architectur
- Each String Has Its Owr us
  Simple & Easy

Triple Module Redundant

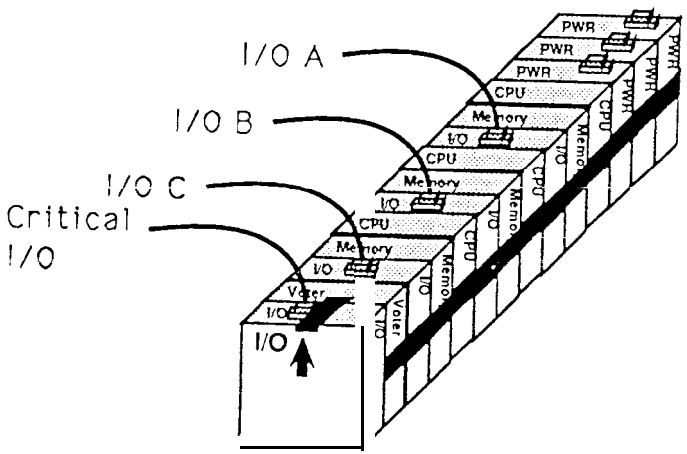

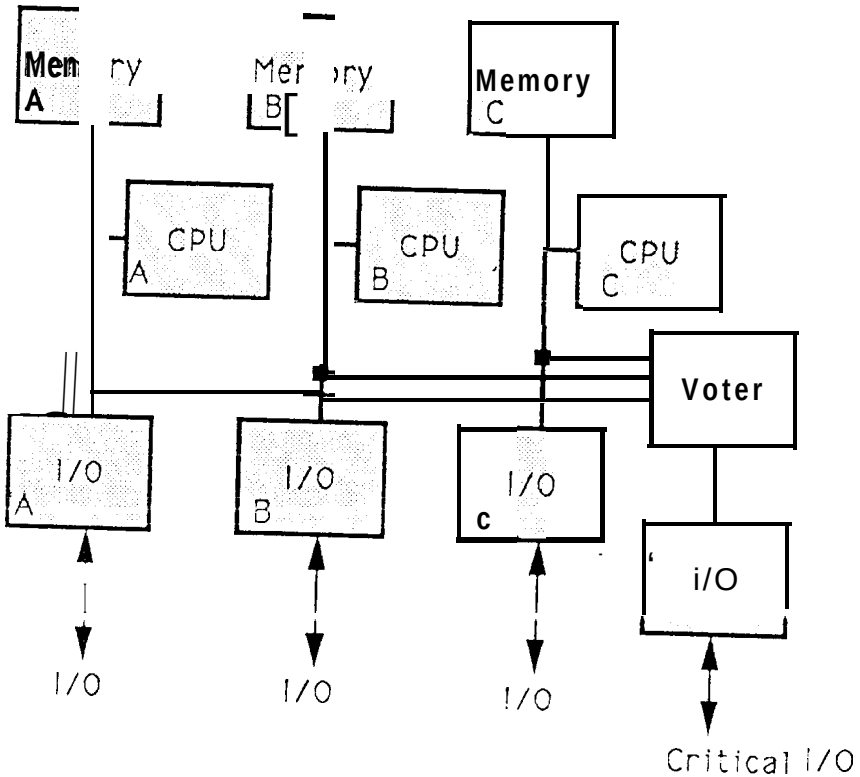

FEATURES

- Triple String Architecture
- Each String Has Its Own Bus
- ***Simple& Easy***

Possible Architectures ")

PIPELINE

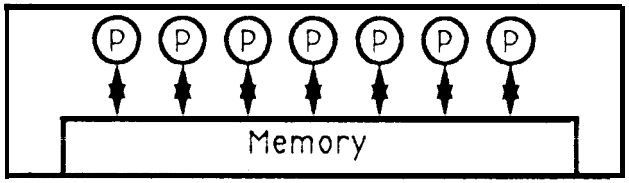

MIMD Cluster

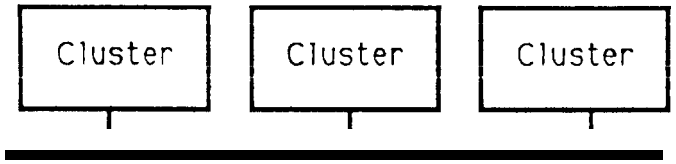

Multiple Clusters

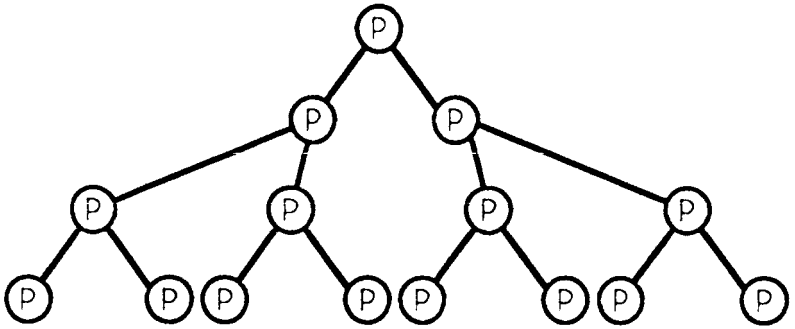

Binary Tree

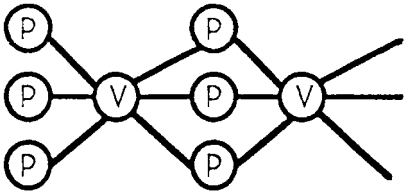

Fault Tolerant Architectures

- 0
- and many others

All using this approach and all with no intersecting wires!!!!!

The Space-Cube Architecture

- The Space - Cube Architecture is

  - Processor Independent, Upgradeable
  - Simple Interchangeable Modules
  - Can Be Easily Configured into Complex Architectures
  - Can Take Advantage Of Commercially Available Products
  - Reduces The Cabling Between Modules To Simple Board To Board Connections