Abstract for CA World '95

From: Terri Davis at JPL Site id: 113960

Session Title: A Do it Yourself Guide to Multi-platform Security Featuring CA-ACF2 Automated Updates

Session #: EA016S

Abstract:

This session will detail a procedure to automate the synchronization of user information across CA-ACF2, Novell, Microsoft Windows NT, MS SQL Server, and internal applications. Using a combination of AC1OW'1'S1., a DYL280II reformat job, and utilities that extract Novell bindery (security) data, the information is downloaded and combined in Xbase format, and matched to Human Resources data. Foxpro or CA-CLIPPER programs perform these functions. A file is uploaded to the mainframe as input to ACIWA'J'C11, where it is used to automatically update Logonid records for organization, mailstop, phone, and name changes etc. Custom reports arc easily produced to manually synchronize and update security information across all platforms, (Novell, MS SQL Server, CICS-Millennium etc.).

Ncw features include CA-ACF2 Resource Rule validations and updates, CA-ACF2 dataset rule validations and cross-reference tools, and the (forthcoming) automatic updates to MS SQL Server security tables.

Biography:

Terri Davis has worked at the Jet Propulsion Laboratory for over 9 years performing in capacities such as Senior Technical Support Analyst and Data Base Administrator. Shc currently leads the Computer and Data Security group at J]'],. Shc holds a Bachelor of Science Degree in Business Management from Farleigh Dickinson University and has additional certifications in Data Processing and Computer Technology.

ADO IT YOURSELF GUIDE TO MULTI-PLATFORM SECURITY

Featuring Automatic Updates to
CA-ACF2 Logonid Records

Terri L. Davis
Member Technical Staff
Jet Propulsion Laboratory
Pasadena, CA

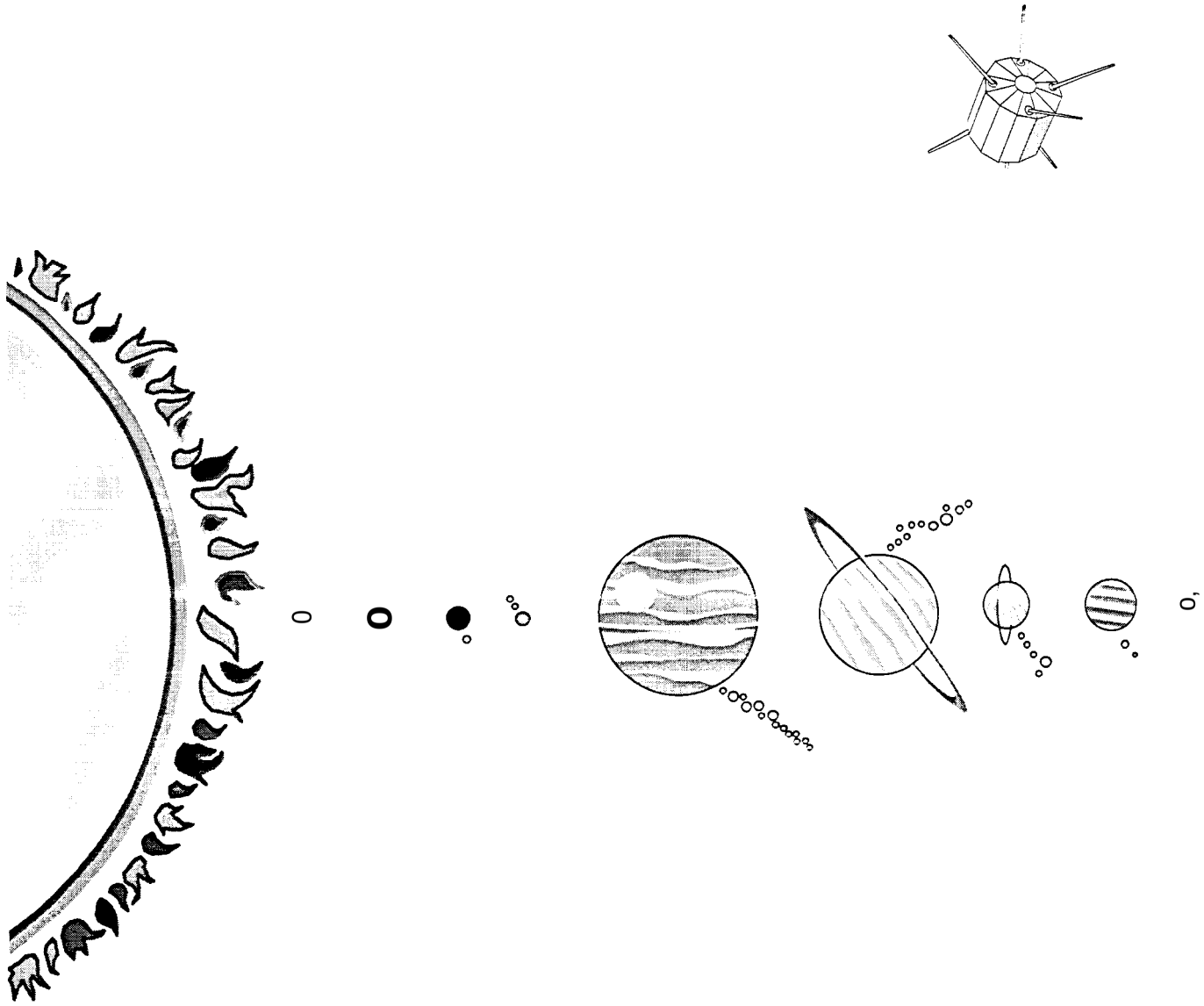

JET PROPULSION LABORATORY

- The Jet Propulsion Laboratory is a Federally Funded Research & Development Center (FFRDC) managed by the California Institute of Technology (Caltech)
- JPL's principle federal affiliation is the National Aeronautics & Space Administration (NASA)
- The major mission of the Laboratory is Earth Observation Science and Solar System Exploration
- Current active projects include Voyager: Solar Magnetosphere and Radio Science exploration; Ulysses: Solar Observation; and Galileo: Jovian (Jupiter) Atmospheric Observation and Plantery System Exploration

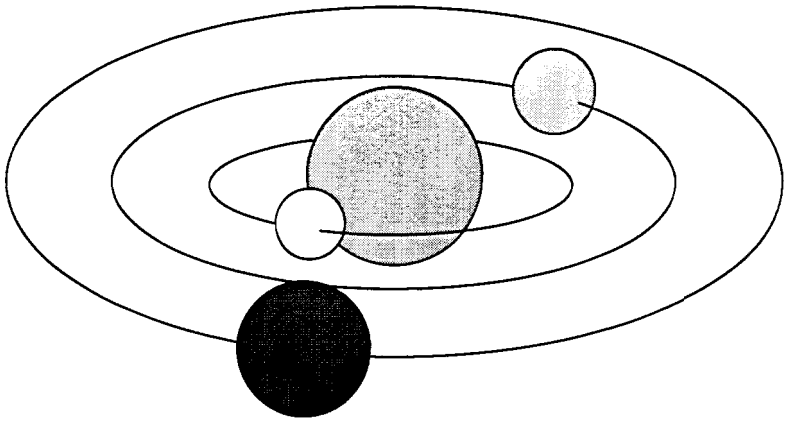

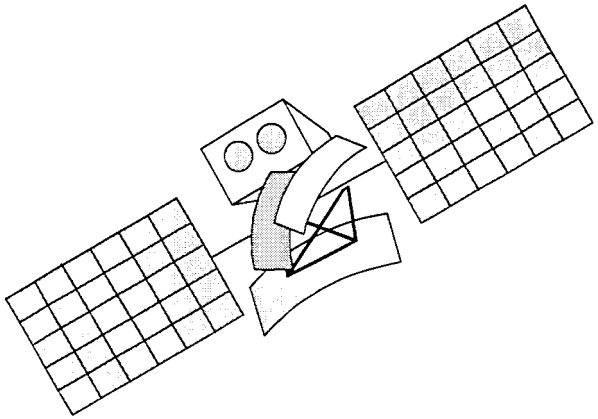

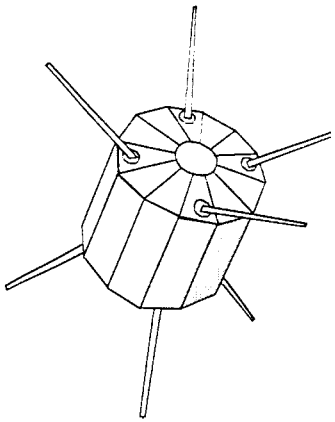

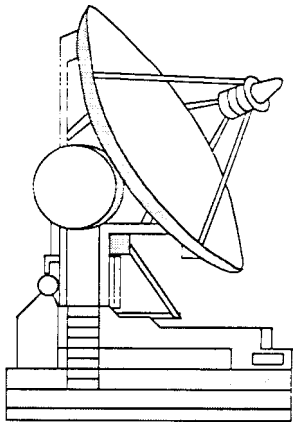

OVERVIEW

- **Jet Propulsion Laboratory**
  - California Institute of Technology
  - Manage interplanetary science missions for NASA
  - 6600 employees/affiliates
- **Business Operations**
  - Financial Information
  - Purchasing
  - Property (inventory/Tracking)
  - Human Resources
  - Project Planning and Budgeting

OVERVIEW

■ Hardware/Software Platforms

- IBM ES9121; CICS; DB2; Millennium; CA-IDMS; CA-ACF2 6.0
- Client/Server; Novell 3. lx; Microsoft SQL Server; Microsoft; Windows NT; UNIX

■ Computer and Data Security

- 2 employees + 1 Academic Part-timer

■ Organizational Dynamics

- Rapidly increasing use of client/server technology (1000 user increase annually)
- Matrix organization structure (Frequent job function/location changes)
- Frequent organizational changes
- Employee status changes

OBJECTIVES

■ Integrate security data from various hardware and software platforms into a centralized database:

- CA-ACF2, Novell, and MS SQL Server into Microsoft Foxpro

■ Automate analysis of system and application accesses:

- ***Current*** Management reports (R&R)
- ***Future*** Centralized Database Application using Microsoft Access Win NT

■ Track users across platforms using Logonid record as the security master file

■ Automate maintenance of security data, where possible:

- Uploads to CA-ACF2

JPL USERID STRUCTURE

GRP, APS, EMP, MSC, BNUM

GRP	(6)	Group - Job Function
APS	(8)	Additional functional definition
EMP	(2)	Employee - Denotes employee (JP) or Affiliate (CT)
MSC	(2)	Miscellaneous - Optional additional functional definition
BNUM	**(6)**	Badge Number - Employee or Affiliate Badge Number

JPL CA-ACF2
LOGONID RECORD
(Client Server Fields)

HRNUM Char(IO) ***Employee #, or Special #'s for Started Task & other Utility Ids.*** 6 Significant Digits currently used. All l's, 2's, 3's, 5's, or 9's are used for special Ids.

. Oxxxxx Employees
• 9XXXXX Affi l iates/contractors

HRAUX Char(6) ***Used to Xref to users of HR Auxiliary Systems:***

• S= Salrev Char(1) starttposition 1
. P= Pinfo Char(1) start position 2

HRSTAT Char(4) ***Employee/Affiliate Employee Status***

• L O A Leave of Absence
. OC On Call

PVAI L Char(4) ***Prevail User***

• P v Only valid value

SEC01 Char(8) ***JPL Security - Future Use***

HRNUM FIELD DEFINITIONS

1111111	Started Task Ids
2222222	Control (CICS) Region Ids
3333333	Class Ids
4444444	CA-ACF Utility Ids - Model
5555555	File Server/Client Server Ids
6666666	Not Assigned
7777777	Not Assigned
8888888	Not Assigned
9999999	Miscellaneous System Ids
0123450	JPL Employee Number
9021050	JPL Affiliate Number

ACKNOWLEDGMENTS

The following brand/product names used within the presentation are trademarks, registered trademarks, and registered trade names.

CA-ACF2 - Computer Associates International Inc.

CA-IDMS - Computer Associates International Inc.

CICS - International Business Machines, Corp.

DB2 - International Business Machines, Corp.

FoxPro - Microsoft Corp.

Millennium - Dun & Bradstreet Software Services, Inc.

Novell **NetWare -** Novell, Inc.

QUICK - Verlad Schreiber-Neumann Publications

R&R Report Writer - Concentric Data Systems

SQL Server - Microsoft Corp.

Windows NT - Microsoft Corp.

CA-ACF2 LOGON ID EXTRACT/COMPARE FLOW DIAGRAM

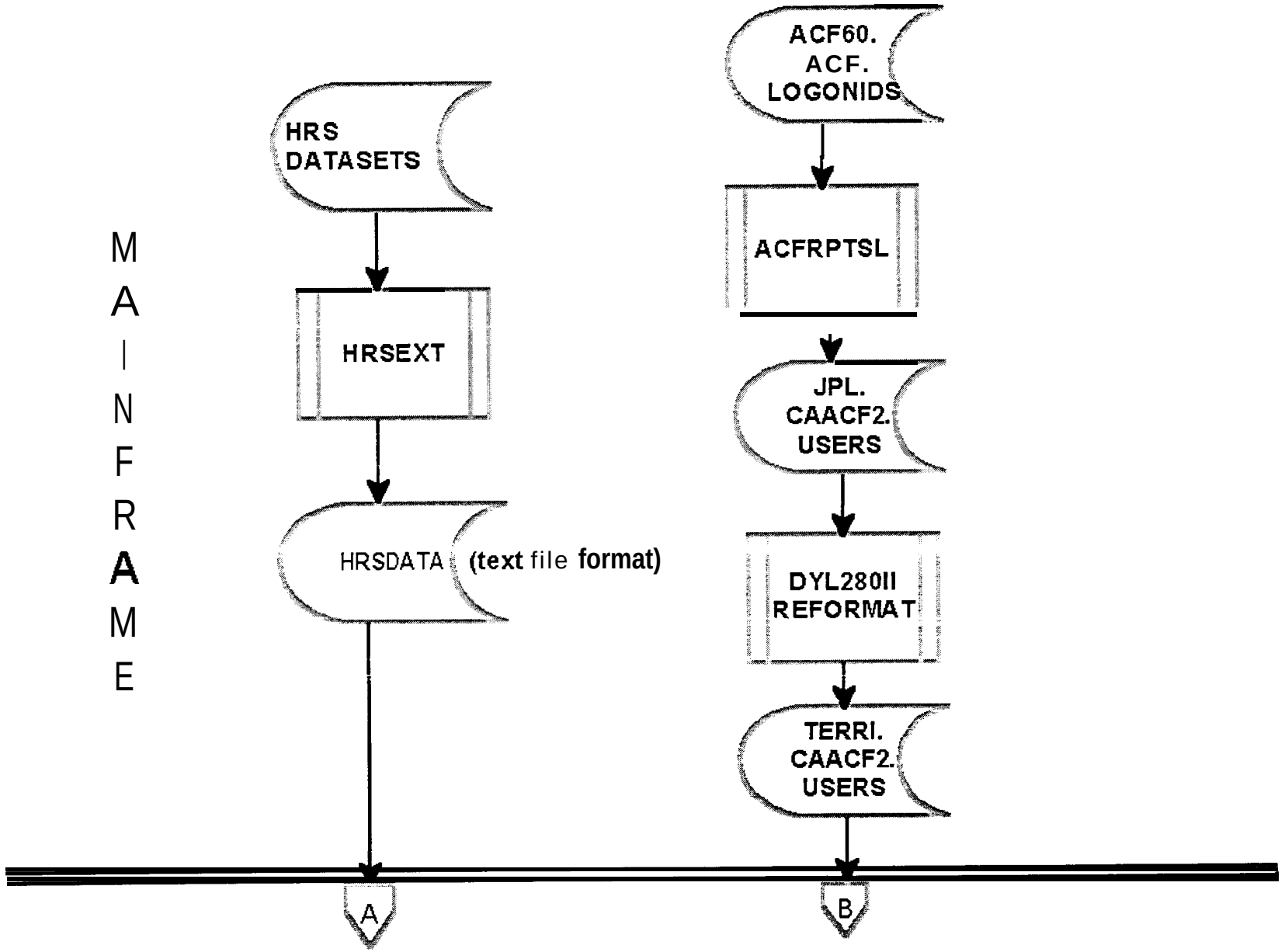
MAINFRAME
HRS DATASETS
HRSEXT
HRSDATA (text file format)
ACF60. ACF. LOGONIDS
ACFRPTSL
JPL. CAACF2. USERS
DYL280II REFORMAT
TERRI. CAACF2. USERS
A
B

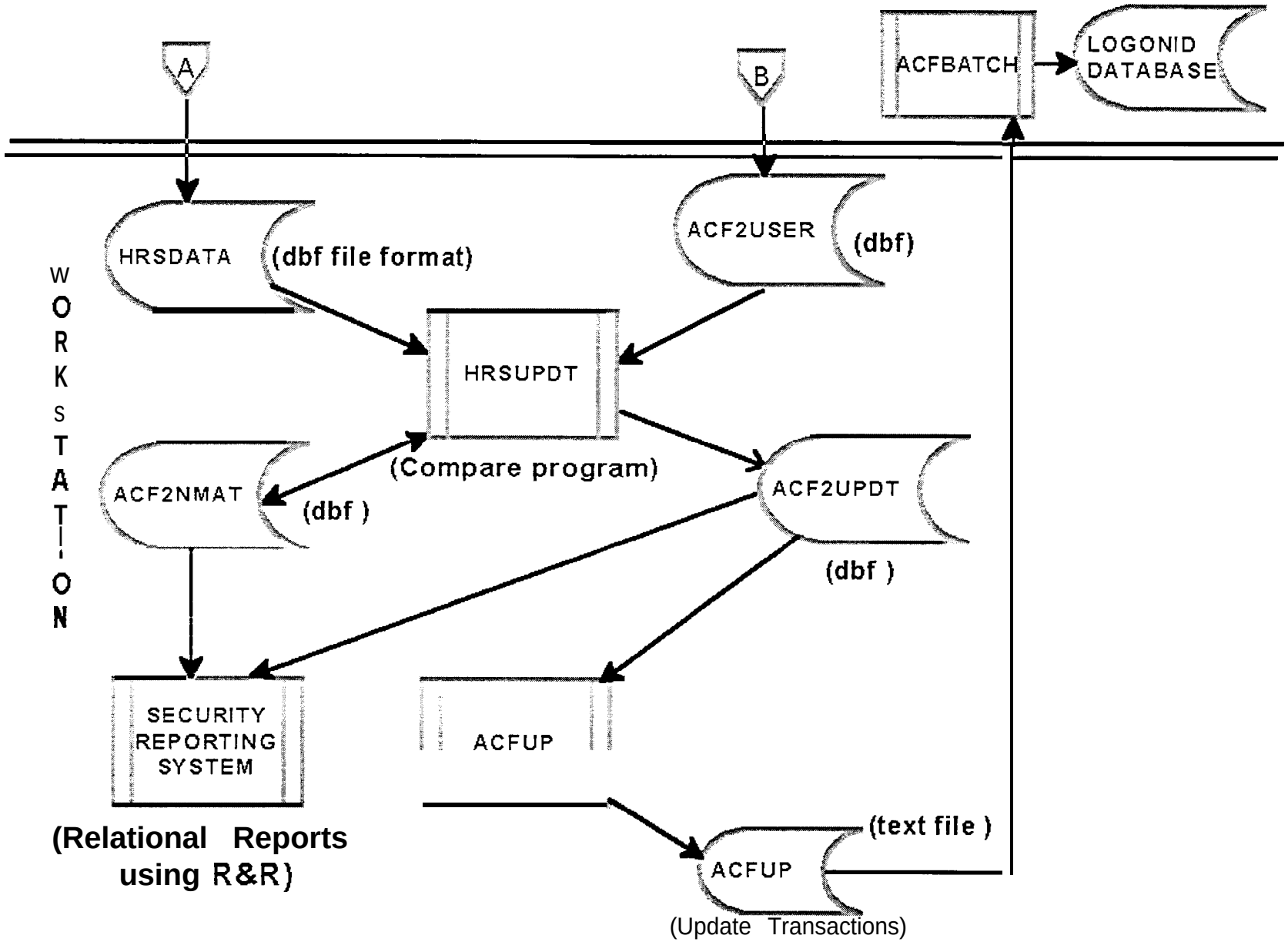
A
B
ACFBATCH
LOGONID DATABASE
HRSDATA
(dbf file format)
ACF2USER
(dbf)
WORKSTATION
HRSUPDT
(Compare program)
ACF2NMAT
(dbf)
ACF2UPDT
(dbf)
SECURITY REPORTING SYSTEM
(Relational Reports using R&R)
ACFUP
ACFUP
(text file)
(Update Transactions)

CA-ACF2 LOGONID EXTRACT

(Page 1)

```
//A0191ID JOB (0155555,A0191 I),'T.DAVIS',
II*         TYPRUN=SCAN,
II          MSGCLASS=H,
II*         RESTART=S020.STEPOI  ,
II*         RESTART= FTPSEC,
//          CLASS=A,
//          REGION=2M,
II          TIME= (3,30),
//          NOTIFY=AOI911
/*ROUTE PRINT U1
/*JOBPARM L=9999,C=0,R=51I, K=55,E=Y
,,*****************************************************************
//' EXTRACTS ALL ACTIVE MASS USERS FROM THE ACF2 DATABASE - NEW
//* ACFFDR FIELDS INCLUDING HRNUM, HRSTAT, PVAIL
//' THIS FILE IS USED FOR DOWNLOADING AND XREF REPORTS
//' EXECUTE FTPPW TO AUTOMATICALLY DOWNLOAD FILE
//*****************************************************************
//ACFRPT EXEC PGM=ACFRPTSL
//*YSPRINT DD SYSOUT=*
//SYSPRINTDD DSN=JPL.CAACF2. USERS, DISP=(OLD)
//SYSIN DD *
INPUT(ACF)
```

CA-ACF2 LOGONID EXTRACT

(Page 1- Continued)

```
TITLE(**JPL LOGON IDS **** )
REPORT(SHORT)
DTCFIELD(NO)
SFLDS(GRP APS SEC MS PHONE BNUM HRNUM HRSTAT PVAIL)
/*
//*******************************************************************
//* THIS JOB REFORMATS THE ACF2 REPORT DUMP OF ALL PRODUCTION USERS
//' ALL ACF2 USERIDS
//' FILE USED FOR DOWNLOADING AND REPORTING
//* THIS VERSION HAS ADDITIONAL FIELDS - NEWEST
//*****************************************************************
//S020 EXEC DYL280II,COND=(4, LT),
//      DT=1440,
II      DWSP=50,
//      DWSS=10,
//      SRTWRK=5
//STEPLIB DD DSN=D280. DYL280II. LOADLIB, DI SP=SHR
//STEP01.SYS280R DD SYSOUT=*
//SYSOUT DD SYSOUT=*
//SORTWK01DD UNIT=WORK,SPACE= (CYL,(5,5),,CONTIG)
//SORTWK02 DD UNIT=WORK,SPACE= (CYL,(5,5),,CONTIG)
//FILEIN DD DSN=JPL.ACF2.USERS, DISP=SHR
```

CA-ACF2 LOGONID EXTRACT

(Page 2)

```
//* UTFILE DD DSN=JPL.ACF2.USERS,DISP=(,CATLG, DELETE),
II*          UN IT= MD EV, SPA CE=(CYL, (I, I), RLSE),
II*          DC B=(RECFM=F B, LRECL=I 00, BLKSIZE=9000)
//S YSIN   DD  *
OPTION PRINT ERROR
************ ************ ************ ************ ************ ******
*
     (TLD) ELIMINATES REPORT HEADING FIELDS AND
IRRRELVENT DATA
************ ************ ************ ************ ************ *******

****USER SPECIFICATION FILE
 FILE FILEIN VB '140 420C LENGTH LRECL
 STATUS STAT USFLG

    AC F21N      140  1
    FIELD40      40   1
    FIELDD       5    1
    GRP          6    36
    GROUP        6    37
    APS          8    46
    LID          8    6
    NAME         20   15
    SECTION      4    55
    MA ILST      8    64
```

CA-ACF2 LOGONID EXTRACT

(Page 2- Continued)

```
PHONE      12  73
BNUM       6   86
HRNUM      10  95
HRSTAT     4   106
PVAIL      4   115

FILE OUTFILE OUTPUT FROM OUT FILE
  FB 100 9000

LIDO          8
NAMEO        20
GROUPO        6
APSO          8
SECTIONO      4
MA ILSTO      8
PHONEO       12
BNUMO        6
HRNUMO       10
HRSTATO      4
PVAILO       4

WORKAREA
```

CA-ACF2 LOGONID EXTRACT

(Page 3)

```
  DYLCOUNT1 = DYLCOUNT1 + 1
  IF DYLCOUNT1 LT 11
    REJECT
  ELSE
     NEXT
  ENDIF
*PRINT AC F21N
*H EXPRINT LRECL

  IF LRECL EQ 136
     MOVE LIDTOLIDO
     MOVE NAME TO NAMEO
     MOVE GROUP TOGROUPO
     MOVE APS TO APSO
     MOVE SECTION TO SE CT IONO
     MOVE MAILST TO MAI LSTO
     MOVE PHONE TO PHONEO
     MOVE BNUM TO BNUMO
     MOVE HRNUM TO HRNUMO
     MOVE HRSTAT TO HRSTATO
     MOVE PVAIL TO PVAILO
     WRITE OUTFILE
```

CA-ACF2 LOGONID EXTRACT

(Page 3- Continued)

```
  ELSE
     REJECT
  ENDIF
|*
// FTPSEC EXEC PGM=FTP, CO ND=(4,LT)
||*=================================================
=
//*     THIS STEP AUTOMATICALLY DOWNLOADS THE FILESTO A
//*      WORKSTATION
//*     MUST HAVE SERVING FTP ACTIVE ON WORKSTATION(TLD)
//*=================================================
//I NPUT DD  DSN=JPL. SE C. CNTL(FTP IN PT), DISP=SHR
//        DD  DSN=JPL. SE C. CNTL(FTPPU T), DISP=SHR
//OUTPUT  DD SYSOUT=*
//S?' SUDUMP DD SYSOUT=*
//SYSABEND DD SYSOUT=*
//SYSPRINT DD SYSOUT=*
//*=================================================
=
```

D:\SECURITY\ACF2NMAT.DBF
Printed: 04/01/95 12:02

CA **ACF2** LOGONID RECORDS
TERMINATIONS/LOAS OR
NO MATCH ON HRS
BY **STATUS/NAME**

STATUS	NAME	LOGONID	SECTION	MAIL STOP	PHONE
	BIRD, TWEETY	A02004	6132	281-103	4-3777
	PEREZ, MIKE	A02023	1790	511-201	7-7429
	SAILOR, POPEYE	A02006	3180	506-415	7-9144
	SMITH, LEE	A02025	6300	511-209	7-7442
	THOMPSON, JENNY	A02014	3970	230-303	4-1111
	ZEILE, TODD	A02021	2800	264-318	3-0556
2	BELINSKY, BO	A02013	2200	171-243	4-7766
	CEDENO, ANDUJAR	A02017	6420	111-115	4-2762
	HARDING, TONYA	A02007	6720	511-312	7-7257
	PARK, CHANHO	A02008	6264	190-220	4-1959
	RABBIT, ROGER	A02005	6110	502-300	7-7565
	STARKS, JOHN	A02012	6452	241-211	4-9329
	WILSON, PETE	A02011	3350	238-638	4-9429
3	BAGWELL, JEFF	A02016	6720	511-305	7-9757
	BIGGIO, CRAIG	A02015	1720	601-205	4-0175

SECURITY\ACF2UPDT.DBF
Printed C!4/02&50752

ACF2/HRS UPDATE REPORT
ACF2 LOGONID RECORDS
SECTION CHANGES
BYAWE

NAME	LOGONID	GROUP	OLD *SECT*	*NEW* SECT	MAIL-STOP	PHONE	PASSKEY
AARON, H4NK	A00007	GEN###	3920	**3480**	301-235	4-8294	MS0AT001
ABBOTT, JIM	A00710	GEN###	222	3180	JPL-HQ2	202-426-9320	MG0AG010
ANDERFLUF, FARLIP	A00055	TCH11	395	6030	602-225	4-4217	MASSTECH
AiKMAN, TROY	A00001	GEN###	3920	5120	T-1709	4-7202	SECURITY
ARNAZ, DEZI	A00087	GEN###	3950	3970	5253670	818-351-3411	MS0AG072
AVERY, STEVE	A00099	SAS###	6220	5120	503-102	818-564-4579	MS0AG150
CEY, RON	A00021	GEN###	3920	3220	TMO	619-249-4958	MH0AT000
CAPRIATI, JENIFER	AO0324	PRQP	1050	6454	DSCC-33	619-255-8052	MG0AG010
DUQUETTE, DAN	A00108	FAP23	3950	6030	511-213	7-7060	MG0AG010
EDBERG, STEFAN	A00059	PROP	3150	3160	JPL-Cape	407-8532161	MF0AT010
WOLANSKI, ALICJA	AOOO08	CFG43	3950	3920	602-745	3-3006	MF0AT01 O

Total Users: 11

DATASET RULE EXTRACT AND REFORMAT FLOW DIAGRAM

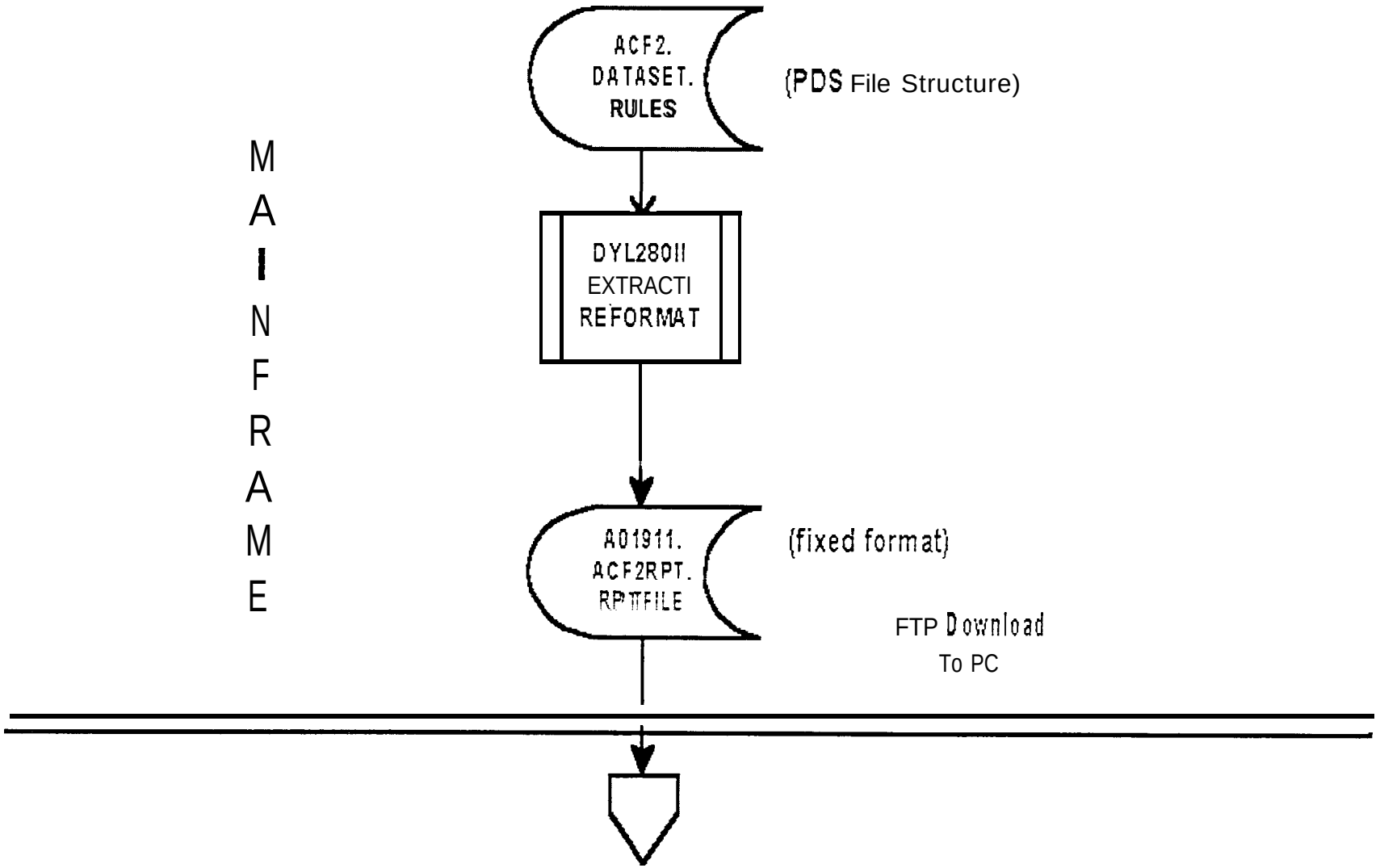
MAINFRAME
ACF2.
DATASET.
RULES
(PDS File Structure)
DYL280II
EXTRACTI
REFORMAT
A01911.
ACF2RPT.
RPTFILE
(fixed format)
FTP Download
To PC

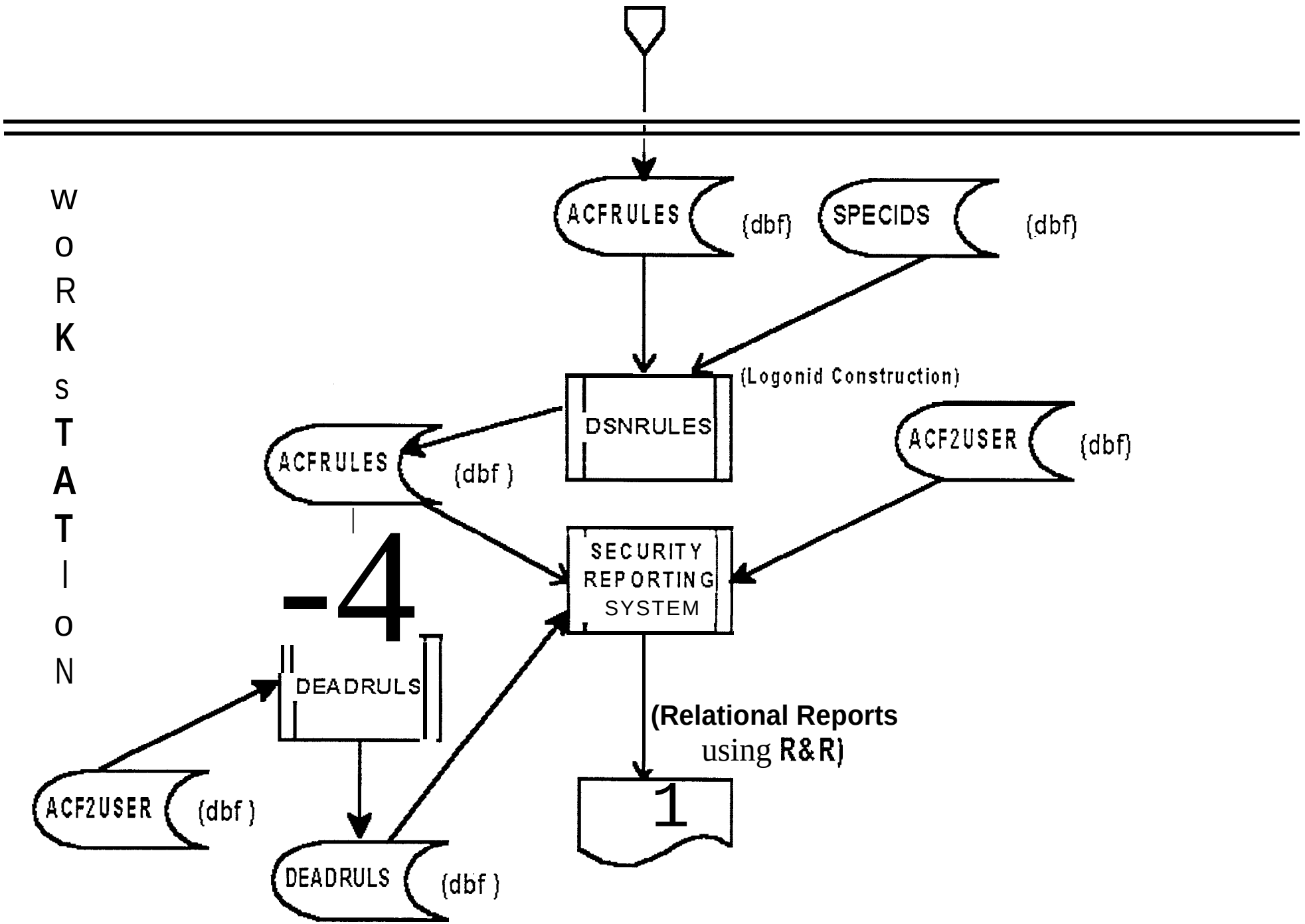
WORKSTATION
ACFRULES
(dbf)
SPECIDS
(dbf)
(Logonid Construction)
DSNRULES
ACFRULES
(dbf)
ACF2USER
(dbf)
SECURITY
REPORTING
SYSTEM
-4
DEADRULS
(Relational Reports
using R&R)
1
ACF2USER
(dbf)
DEADRULS
(dbf)

DATASET RULE EXTRACT AND REFORMAT
(Page 1)

```
//A01911D JOB (OIKW917,A01911 ),'HOLD*T. DAVIS ',
//*          TYPRUN=SCAN,
II*          RESTART=ACF3000,
II*          RESTART=FTPSEC,
II           MSGCLASS=H,
//           CLASS=A,
//           REGION=2048K,
//           TIM E=(60),
II           NOTIFY=A01911
/*ROUTE  PRINT U1
/*JOBPARM  L=9999,C=0,R=600,K=55,E=Y
/*OUTPUT   BBB DEST=U1,FORMS=118,CHARS=GS12,FCB=CH11,BURST=Y
//*****************************************************************
//' THIS JOBS EXTRACTS INFO FRONJPL.DATASET. RULES, BASED
//*    ON THE RULES MASK YOU SELECT REFORMATS AND REMOVES
//* THIS JOB  SELECTS  ALL  RULES FOR VARIOUS REPORTIN PURPOSES
//* FORMAT FOR VALIDATION AND REPORTING IN FOXPRO
//************* *****  ********************************,***********
//*ROUTE PRINT U1
//ACF2000  EXEC  PGM=IDCAMS
//*************** ****************** ********************************
II*       FILE CLEANUP
//*       DELETES ALL USER FILES REQUIRED FOR PROCESSING
//*****************************************************************
```

DATASET RULE EXTRACT AND REFORMAT

(Page 1 Continued)

```
//SYSOUT DD SYSOUT=*
//SYSPRINT DD SYSOUT=*
//SYSUDUMP DD SYSOUT=*
//SYSIN DD *
 DELETE 'A01911.ACF2RPT.RPTFILE'
 DELETE 'A01911.ACF2.RULES.EXTRACT'
   IF LASTCC = 8-
THEN SET MAXCC = O
//*
//ACF2070 EXEC PGM=DYL280,
II        REGION=4096K,
//        PARM='UA=********'      <=== ACF2RULE
//*****************************************************************************
//*     PRODUCE A SINGLE SEQUENTIAL FILE FROM PDS OF DECOMPED
Ii*     RULES WITH $KEY AS RECORD ID FOR EACH LINE OF RULE.
//*     RECORDS REFORMATED IN TO FIXED FOR DOWNLOAD AND REPORTING.
''*****************************************************************************
```

DATASET RULE EXTRACT AND REFORMAT

(Page 2)

```
//*      ONCE THE REPORT RECORD HAVE BEEN CREATED
//*      MULTIPLE REPORTS CAN BE RUN FROM THIS FILE
//*      "A01911.ACF2RPT.RPTFILE"                    *
//*****************************************************************
//STEPLIB  DD  DSN=D280.DYL280II.LOADLIB,DISP=SHR
//SYSPRINT DD  SYSOUT=*
//SYS280R  DD  SYSOUT=*
//SYSOUT   DD  SYSOUT=*
//SYS004   DD  UNIT=SYSDA,SPACE=(CYL,(2,2))
//LIBFILE  DD  DSN=JPL.DATASET.RULES,DISP=SHR
//RPTFILE  DD  DSN=A01911.ACF2RPT.RPTFILE,
//          DISP=(NEW,CATLG,DELETE),UNIT=SYSDA,
//          SPACE=(CYL,(5,5),RLSE),
//          DCB=(RECFM=FB,LRECL=145,BLKSIZE=2900)
//SYSIN    DD  *
FILE LIBFILE VB 251 PDS DSNAREA MEMBER MEMNAME STATUS STATIND
  INREC    255 01   ( )
  INSEQ     08 01
  INKEY     07
  FILLER    06
  INHLV     08
  INDAT     30 16
```

DATASET RULE EXTRACT AND REFORMAT

(Page 2 Continued)

```
FILE RPTFILE OUTPUT FROM RPTFILE FB 145
   OUTREC 14501
   OUTREC1 14501

WORKAREA
  WDSNAREA 52 01
  WDSNAME 44 01
  WVOLID 06
  WRECLNG 02 BI

WORKAREA
  WKRECF 80 01
  WKMEMF 08 01
  WKWRDF 01

WORKAREA
```

DATASET RULE EXTRACT AND REFORMAT
(Page 3)

```
WKRECP      80 01
WKMEMP      08 01
  WKWRDP  01
  WKDATA  20

WORKAREA
  WKPARM  10  01
  WKPMEM  08  01

WORKAREA
  WORD5     05  01
  WORD2     02 01
  WORDI     01 0-I

WORKAREA
  WKREC     145 01
  WKNDX      08 01
  WKPREFIX  16
  WKDSN     40
  WKUID     30
  WKACC     40
WORKAREA
WKFL1            10001
```

DATASET RULE EXTRACT AND REFORMAT

(Page 3 Continued)

```
WORKAREA
  WKKEY      49 01
  WKKEY1     40 1
  WKKEYB     06 9
  WKPFIX     02 9
  WKPFIX1    01 9
  WKSPNUM    06 9
  WKBNUM     05 9
  WKKEY2     09

WORKAREA
  WKSKEY     49 01
  WKSKEY1    40 01
  WKSKEY2    09

  ON ONE
    MOVE DYLPARM TO WKPARM
    ENDONE
  READDIR INBFILE
  IF STATIN= EQ 'E'
    STOP
    ENDIF
```

DATASET RULE EXTRACT AND REFORMAT
(Page 4)

WKMEMF

TO WKWRDP LENGTH 1
TO WKMEMP(INX) LENGTH 1

NE WKMEMP

'E'

DATASET RULE EXTRACT AND REFORMAT

(Page 4 Continued)

```
INY = 8
  MOVE INREC(INY) TO WORD2 LENGTH 2

  IF WORDI EQ '*'
    GOTO COOO
    ENDIF
*** SEE IF RECORD IS A $KEY ***
  IF WORD2 EQ '$K'
    INY = INY + 5
    MOVE INREC(INY) TO WKNDX LENGTH 8
    TRANSLATE WKNDX FROM ')' TO X'40'
    MOVE BLANKS TO WKPREFIX
    GOTO C000
    ENDIF

*** SEE IF RECORD IS A $PREFIX ***
IF WORD2 EQ '$P'
    INY = INY + 8
    MOVE INREC(INY) TO WKPREFIX LENGTH 16
    TRANSLATE WKPREFIX FROM ')' TO X'40'
GOTO COOO
    ENDIF
```

DATASET RULE EXTRACT AND REFORMAT

(Page 5)

```
*** RESET THE INDEX FIELDS FOR NEXT RECORD
  INY = 8
  INX=O
C010:
  MOVE INREC(INY) TO WORD5 LENGTH 5
  IF WORD5 EQ ' UID('
    MOVE SPACES TO WKDSN(INX)
    GOTO C020
    ENDIF
  MOVE INREC(INY  TO WKDSN(INX
  INX = INX + 1
  INY = INY + 1
  IF INY EQ40
    GOTO C020
    ENDIF
  GOTO CO I 0
C020:
***FINDSUID STRING *****
** TRANSLATE WKDSN FROM '-' TO SPACES
  INX = 0
  INY = INY + 5
D000:
  MOVE INREC(INY) TO WORDI LENGTH 1
```

DATASET RULE EXTRACT AND REFORMAT

(Page **5** Continued)

```
IF WORDI EQ ')'
    MOVE SPACES TO WKUID(INX)
    GOTO E000
  ENDIF
  IF INX GT40
    GOTO EOOO
  ENDIF
  MOVE WORDI TO WKUID(INX) LENGTH 1
  INX = NX + 1
  INY = NY + 1
  GOTO D000
E000:
  INY = INY + 2
  MOVE SPACES TO WKACC
  MOVE SPACES TO WKDATA
  MOVE INREC(INY) TO WKACC LENGTH 40
  INZ = 0
```

```
EO05:
  MOVE WKACC(INZ) TO WORD5 LENGTH 5
  IF WORD5 EQ 'DATA('
    MOVE WKACC(INZ) TO WKDATA
    MOVE SPACES TO WKACC(INZ) LENGTH 30
    MOVE WKDATA TO WKACC(INZ)
    GOTO EO06
  ENDIF
  IF INZ EQ 40
    GOTO EO06
  ENDIF
  INZ= INZ + 1
  GOTO EO05
E006:
  INY= INY + 1
  MOVE WKREC TO OUTREC1
  WRITE RPTFILE
  GOTO C000
E900:
  MOVE SPACES TO INREC
  GOTO COOO
F000:
  INX = O
  INY = O
  INZ = O
```

DATASET RULE EXTRACT AND REFORMAT
(Page 7)

```
//ACF3000 EXEC PGM=DYL280,COND= (4,LT),
//          REGION=4096K
//*****************************************************************
//*      FINAL REFORMAT PRIOR TO DOWNLOAD TO PC                    *
II*                                                                *
//*****************************************************************
//STEPLIB DD DSN=D280.DYL28011 .LOADLIB,
II          DISP=SHR
//SYSPRINT DD SYSOUT=*
//SYS280R DD SYSOUT=*
//SYSOUT DD SYSOUT=*
//SYS004 DD UNIT= SYSDA,
//          SPACE= (CYL,(2,2))
//INFILE DD DSN=A01911.ACF2RPT. RPTFILE,
II          DISP=(OLD)
//OUTFILE DD DSN=A01911.ACF2.RULES.EXTRACT,
//*         DISP=(OLD)
//          DISP=(NEW,CATLG,DELETE),
II          UNIT= SYSDA,
//          SPACE= (CYL,(2,1),RLSE),
II          DCB=(RECFM=FB,LRECL= 145, BLKSIZE=2900)
//SYSIN DD '
FILE INFILE INPUT FB 1452900
  INREC 14501
  RKEY    08 01
  RPREFIX 16
```

DATASET RULE EXTRACT AND REFORMAT

(Page 7 Continued)

```
  RDSN  40
  RUID   30
  RACC  40
  RTYPE  07  95

FILE OUTFILE OUTPUT FROM OUTFILE FB 145
   OUTREC  14501

 IF RTYPE EQ 'NEXTKEY'
   REJECT
 ELSE
   NEXT
 ENDIF

MOVE INREC TO OUTREC
WRITE  OUTFILE
/*
```

DATASET' RULE EXTRACT AND REFORMAT

(Page 8)

```
//FTPSEC  EXEC  PGM=FTP,COND=(4,LT)
//' THIS STEP AUTOMATICALLY DOWNLOADS THE FILES TOA WORKSTATION
II*     MUST HAVE SERVING FTP ACTIVE ON WORKSTATION - TERRI
//INPUT  DD  DSN=JPL.PROD.CNTL(FTPINPT),DISP=SHR
//          DD DSN=JPL.PROD.CNTL(FTPARULE),DISP=SHR
//OUTPUT DD SYSOUT=*
//SYSUDUMP DD SYSOUT=*
//SYSABEND DD SYSOUT=*
//SYSPRINT DD SYSOUT=*
//*
```

Date: 04/03/95

JPL/MASS DATASET ACCESS REPORT
OBSOLETE ACCESS RULES
BY ACF2 RULE KEY

KEY	PREFIX	DSN	LOGONID	RULE UID STRING
CAI		CA7-.-	A01911	**********01 911
CANDLE			EGAMON	**********OMEGAMON
DBAIDMSIDMS.	DBA	LOADLIB	A**SRM	**********SRM
		SYSCTL	A**SRM	**********SRM
SAD415A~	SAR2	D415AP41.$1	A81827	GEN##########JP##81827
		D415AP44.$1	A81827	GEN##########JP##81827
SAR		SYTEM3.SARDB	SA RXMS	STC**********SARXMS
SAR2MR9	SAR2	MRASY001.SP415	A81827	GEN##########JP##81827
		MRASYO02.SP417	A81827	GEN##########JP##81827
		MRASYO02.SP440	A81 827	GEN##########JP##81827
		MRASY006.$P455	A81 827	GEN##########JP##81827
		MRASY006.$P466	A8'i827	GEN##########JP##81827
JPL		DATASET. RULES	A00555	SCR**********JP**00555
WORK		DEV.	AO0555	**********00555

Filename:D:\SECURITY\HRRULES.DBF
Report Name: RULES BYNAME#1

AsOf: 05/24/95

JPL DATASET ACCESS REPORT
HRS SALARY REVIEW ACCESS
BY NAME

USER NAME	KEY	PREFIX	DSN	LOGONID	SEC	GROUP	RULE	UID STRING
ACE, MARIO				**M04519**	6150	**HRS00**		
	SAL7500K	SALSP2S	SAL7500P801G2					HRsoo##hw##JP##04519
	SAL7500L	SALSP2S	SAL7500PUNCH801					HRsoo#####JP##04519
ALVAREZ,JUANITA				**M03750**	6725	HRSAA		
	SALSMHH	SALSP2S	MHHRD025.G****V					HRSAA 1 ● ******J P**03750
BARBER,SEVILLE				M04770	1400	**GEN###**		
	SAL7300K	SALSP2S	SAL7300UP14X					GEN##########JP##04770
	SAL7400K	SALSP2S	SAL7400DOWN14X					GEN##########JP##04770
	SAL7500K	SALSP2S	SAL7500PNCH14X.-					GEN##########JP##04770
BARELO, CARIN				**M01224**	5060	**SAS###**		
	SAL7300M	SALSP2S	SAL7300UP506					SAS##########JP##01224
	SAL7400M	SALSP2S	SAL7400DOWN506					SAS##########JP##01224
	SAL7500L	SALSP2S	SAL7500PNCH506.-					SAS##########JP##01224
BARLOW. HARRY				M67739	3520	**GEN###**		
	SAL7300M	SALSP2S	SAL7300UP352					GEN##########JP##67739
	SAL7400L	SALSP2S	SAL7400DOWN352					GEN##########JP##67739
	SAL7500K	SALSP2S	SAL7500PNCH352.-					GEN##########JP##67739
BATES, NORMAN				M08342	3490	**SAS###**		
	SAL7300M	SALSP2S	SAL7300UP349					SAS##########JP##08342
	SAL7400L	SALSP2S	SAL7400DOWN349					SAS##########JP##08342
	SAL7500K	SALSP2S	SAL7500PNCH349.-					

PAGE: 1

NOVELL FILE SERVER EXTRACT/COMPARE FLOW DIAGRAM

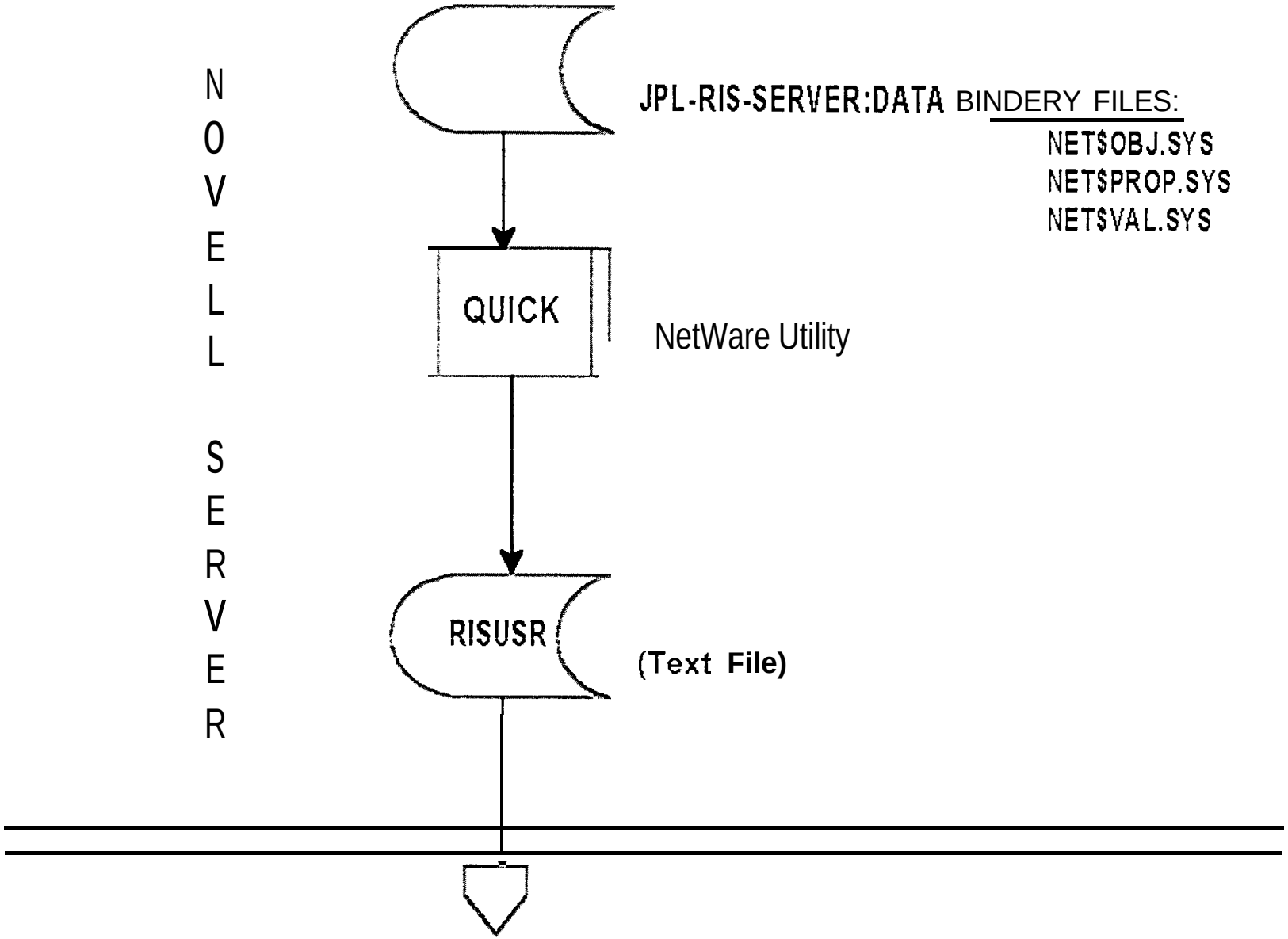
NOVELL SERVER
JPL-RIS-SERVER:DATA BINDERY FILES:
NET$OBJ.SYS
NET$PROP.SYS
NET$VAL.SYS
QUICK
NetWare Utility
RISUSR
(Text File)

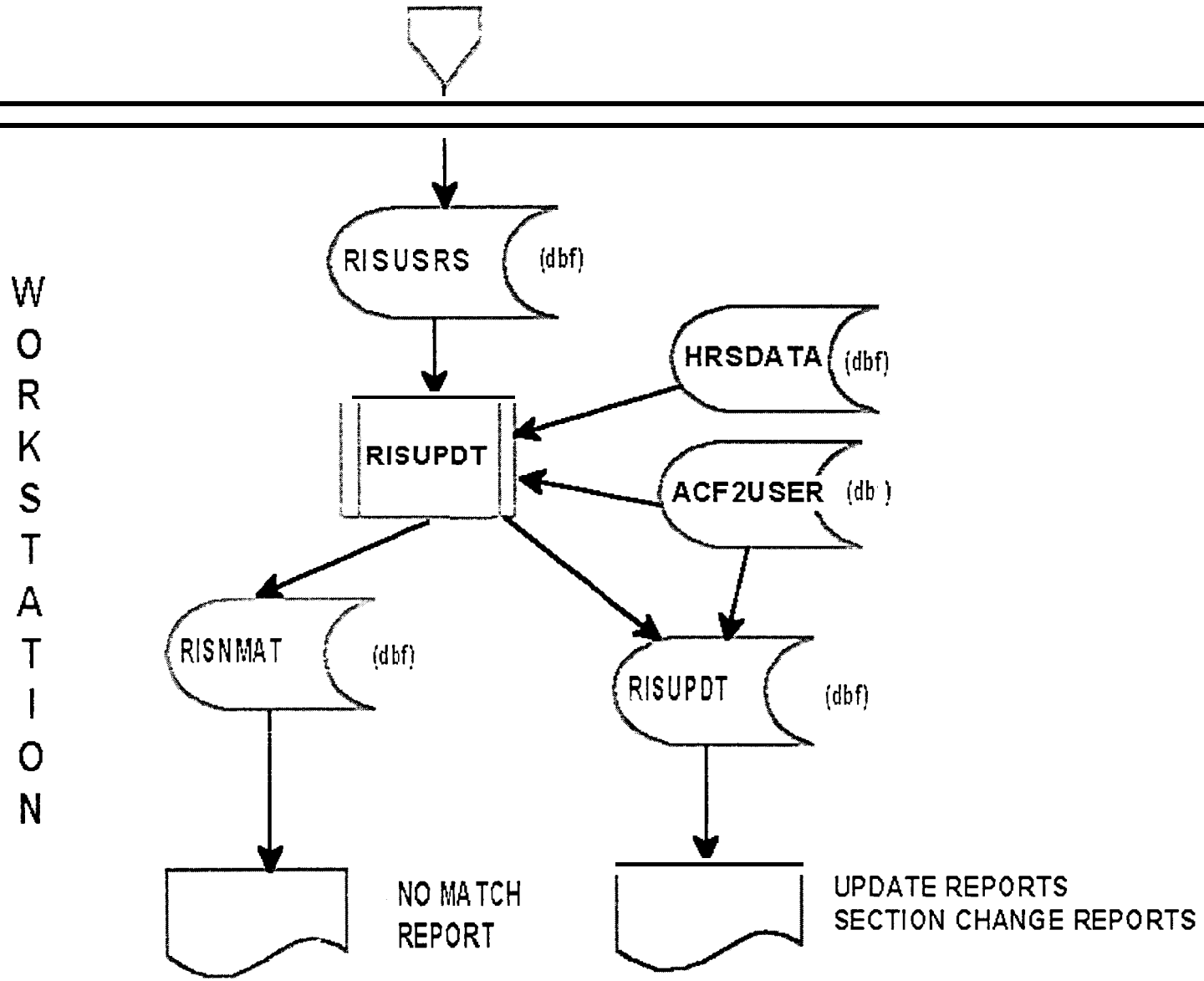
WORKSTATION
RISUSRS
(dbf)
HRSDATA
(dbf)
RISUPDT
ACF2USER
(db)
RISNMAT
(dbf)
RISUPDT
(dbf)
NO MATCH
REPORT
UPDATE REPORTS
SECTION CHANGE REPORTS

D:\SECURITY\RIS UPDT DBF
Printed: 04103/95 12:06

MASS DATA SECURITY
RIS RCP SECTION CHANGE REPORT #I
BY NAME

USER NAME	USERID	PROJ	JOB	COG ORG	CURR SECT	OLD SECT	EMPLOYEE STATUS
ABRAMS, DAN	A02030				3110	3150	1
BARBELL, CAROL	A01224				5060	6035	1
				603			
D'MARIO, LOIS	A17216				3120	3153	1
		544		3120			
		544		3140			
DU MARIN, CAROL L.	A19524				5010	5000	1
		781					
		782					
		783					
				500			
KUBOS, HOLLY	A00927				352C	3550	
		567	412A0				
LA BELLE, PATI	A01540				3330	3150	

Total Users: 6

MICROSOFT SQL SERVER LOGIN ID EXTRACT

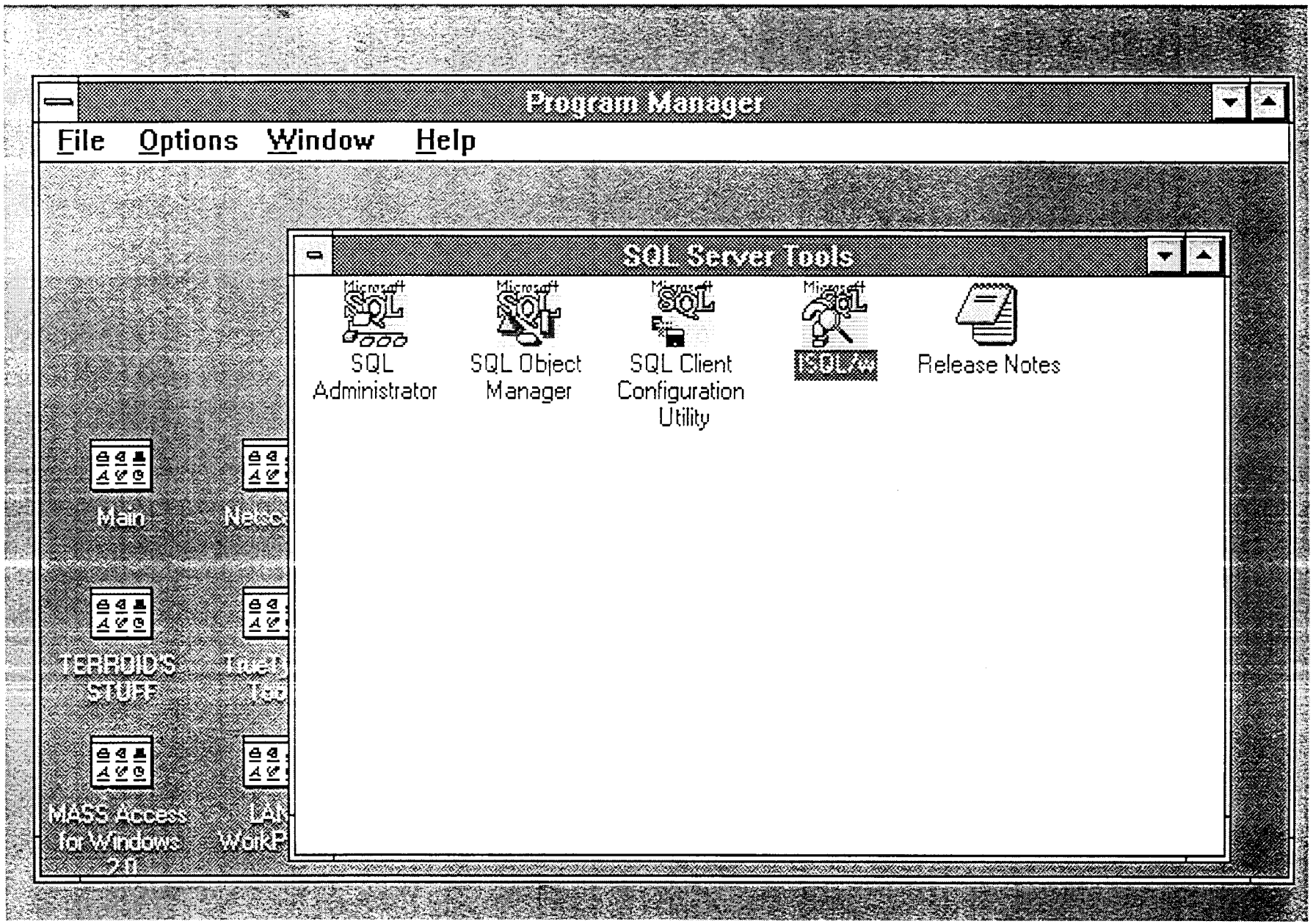
Program Manager
File Options Window Help
SQL Server Tools
SQL Administrator
SQL Object Manager
SQL Client Configuration Utility
ISQL/w
Release Notes
Main
TERROIDS STUFF
MASS Access for Windows 2.0

Window 3.1 SQL Tools Group

- Perform Security Administration on SQL Server Applications residing on OS/2 or Win NT Servers.

- Install SQL Administrator specifying Network Protocol, i.e. Novell IPX/SPX, TCP/IP, Name Pipes(default)

Microsoft SQL Administrator

File View Manage Window Help

Current Connections:

Connect Devices DB Logins Remotes System Query

Connect Server

Server: JPL-MASS-010

Login Id: sa

Password: ********

Start Server before Connect

Connect

List Servers...

Cancel

Help

Access to the SQL Server

- Login to the SQL server as the SA (System Administrator/Supervisor)

JPL

[redacted]

[redacted]

File View Manage Window Help

Current Connections:

JPL-MASS-010

Connect Devices DB Logins Remotes System Query

[redacted]

SQL Administrator Window

- Select (Click on) “QUERY”

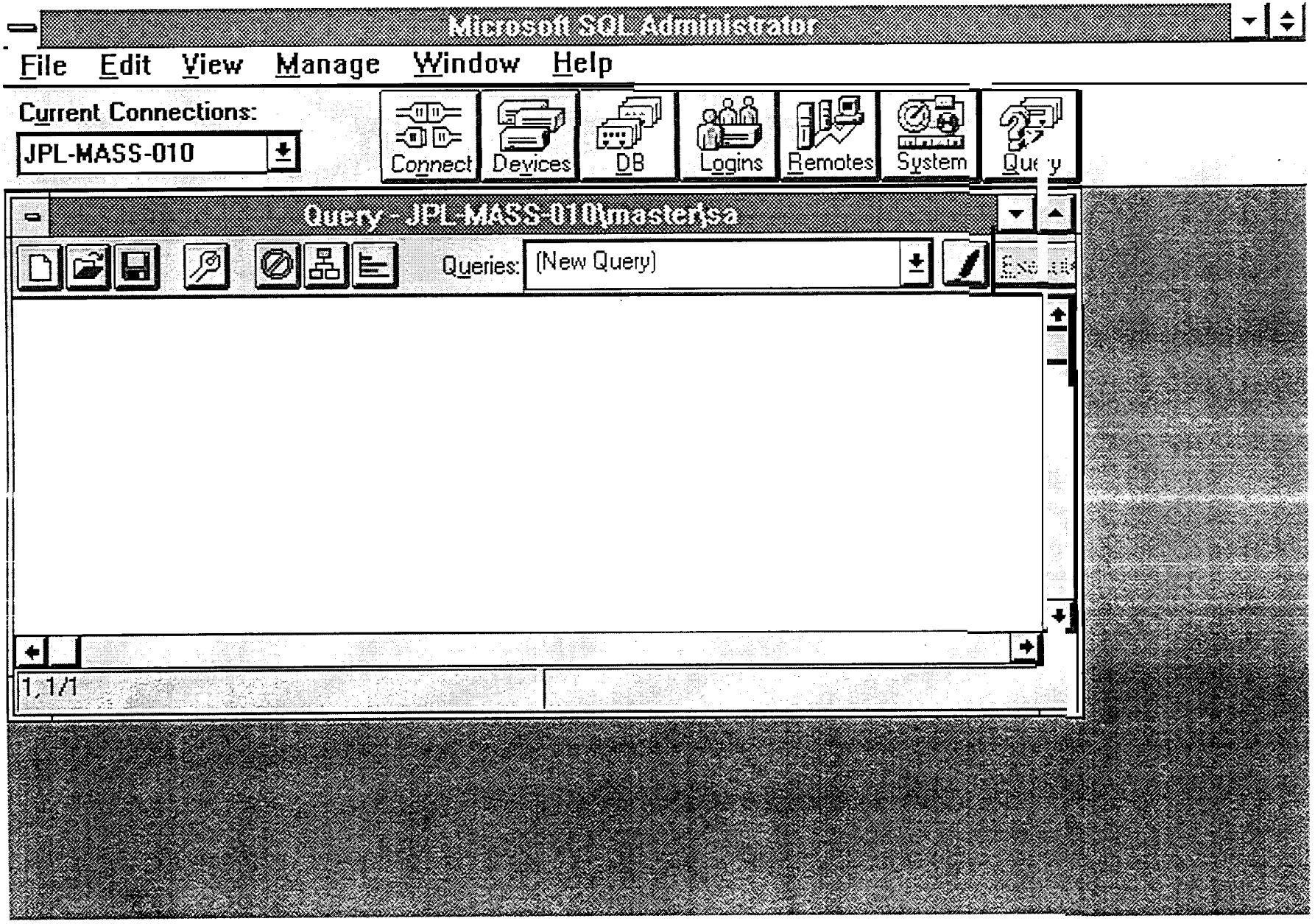
Microsoft SQL Administrator
File Edit View Manage Window Help
Current Connections:
JPL-MASS-010
Connect
Devices
DB
Logins
Remotes
System
Query - JPL-MASS-010\master\sa
Queries:
(New Query)
1, 1/1

SQL Query Window

- The Master Database contains the Login Id data for the Server

JPL

F e Ed V ew Manage W ndow He p

Current Connections:

JPL-MASS-010

Connect Devices DR Logins Remotes System Query

Query - JPL-MASS-010\master\sa

Queries: (New Query) Execute

```
select ab   e,name,passwor^ from syslogins
```

43, 1/1

SQL Command to Extract Logins

- Type in command and select (click on) "Execute"
- The subsequent screen provides the results of the query

Microsoft SQL Administrator

F e Ed V ew Manage W ndow Help

Cu en Connec ons

JP_ MASS 0 0

Connect Devices DB Logins Remotes System Query

Query - JPL-MASS-010\master\sa

#1 select dbname,name,passwo ... - Results

Cancel Close

dbname	name	p
mast er	sa	$
mast er	probe	(
FTE	f teadmin	d
FTE	M00204	s
FTE	M01563	#
FTE	M02404	j
FTE	M07496	b
FTE	M10194	b
FTE	M10623	L
FTE	M13957	C

1, 1/216

Microsoft SQL Administrator

File Edit View Manage Window Help

Save File

File Name:

iplsql.txt

Directories:

c:\sql\bin

c:\
sql
bin

OK

Cancel

Network...

List Files of Type:

Report Files (*.RPT)

Drives:

c: agassi

M01563	FTE
M02404	FTE
M07496	FTE
M10194	FTE
M10623	FTE
M13957	FTE

1, 1/1

18, 7/216

Save Results to a File

- Resulting file is a fixed format text file, easily imported to a DBF

Alternate Method to Extract Logins from SQL

```
@Echo ON

ISQL IS {server name} /U sa /P {sa password} /Q " {select
accdate, dbname,name,password from syslogins}" /o
C:\Security\sqluser.txt
```

From a Windows workstation where SQL Tools are installed:

- **Replace "server name" with the SQL Server, and "password" with the SA password**
- **Execute the above command as a Batch File from the DOS Prompt**

Resulting File

AC CD ATE	DBNAME	NAME	PASSWORD
JAN 1 1900 12: 00AM	MASTER	SA	*******
MAR 14 1994 10:46AM	MASTER	PROBE	(NULL)
MAR 14 1994 3:06PM	FTE	FTEADMIN	TENNIS
MAR 14 1994 3:11PM	FTE	AO0204	RAIDERS
MAR 14 1994 3:12PM	FTE	A01563	MONTANA
MAR 14 1994 3:13PM	FTE	A02404	49 NERES
MAR 14 1994 3:13PM	FTE	A07496	AGASSI
MAR 14 1994 3:14PM	FTE	A10194	USOPEN
MAR 14 1994 3:14PM	FTE	A10623	EL FMAN
MAR 14 1994 3:15PM	FTE	A13957	BOINGO
MAR 14 1994 3:15PM	FTE	A15744	EMERALD
MAR 14 1994 3:15PM	FTE	A17257	KISSME
MAR 14 1994 3:16PM	FTE	A17275	PEA RJAM
MAR 14 1994 3:16PM	FTE	A17941	OFFSPRING
MAR 14 1994 3:17PM	FTE	A31420	VEGAS
MAR 14 1994 3:1 7PM	FTE	A32894	MYPAT
NOV 21 1994 4:55PM	FTE94	FTE94ADMIN	FAR FLUFF

Current release of SQL Server (v4.2.1), passwords are <u>not</u> encrypted!

APPENDICES

- Program Code
- File Definitions