Compact Drilling and Sample System

Greg R Gillis-Smith* and Doug Petercsak**

Abstract

The Compact Drilling and Sample System (CDSS) was developed to drill into terrestrial, cometary, and asteroid material in a cryogenic, vacuum environment in order to acquire subsurface samples. Although drills were used by the Apollo astronauts some 20 years ago, this drill is a fraction the mass and power and operates completely autonomously, able to drill, acquire, transport, dock, and release sample containers in science instruments. The CDSS has incorporated into its control system the ability to gather science data about the material being drilled by measuring drilling rate per force applied and torque. This drill will be able to optimize rotation and thrust in order to achieve the highest drilling rate possible in any given sample. The drill can be commanded to drill at a specified force, so that force imparted on the rover or lander is limited. This paper will discuss the cryo dc brush motors, carbide gears, cryogenic lubrication, quick-release interchangeable sampling drill bits, percussion drilling and the control system developed to achieve autonomous, cryogenic, vacuum, lightweight drilling.

Introduction

The goal that initially began the development of the CDSS was to obtain a subsurface sample from up to 1 meter deep, without mixing with the material along the hole, and place that sample in a science instrument onboard the lander, without letting the sample warm up at all. Originally this mechanism was developed to drill into cometary materials in a microgravity environment where a controlled maximum drilling force was critical. Cryogenic and vacuum operation, small mass, and low power requirements were the primary design requirements. As this drill became a candidate for Mars sampling, operation requirements became easier to meet with an increase in temperature and atmosphere.

In order to not thermally alter the sample, the CDSS was designed such that all components would operate at the bulk temperature of the sample. For comets this meant as cold as -165°C and for Mars it is closer to -1 OO"C. The motors, lubricants, and materials had to be developed to meet these requirements. Following is a summary of the operation of the CDSS and then a discussion about each of the major components of the mechanism.

•Mars Exploration Engineering, Caltech, Jet Propulsion Lab, 4800 Oak Grove Dr, Pasadena, CA 91109
"* American Technology Consortium, 251 O-G Las Posas Rd, Suite 201 Camarillo, CA 93010

Basic Design

The basic design of the drill mechanism uses a keyed acme lead screw that is rotated by one motor/gearbox and a nut driven by a second motor/gearbox to provide thrust, Since the nut and keys can drive the screw from anywhere along its length, this design allows the drill to be longer than its current 1.2 m screw by adding screw segments. H does not require a drill tower equal in height to the desired drill depth. The mass of the drill mechanism without indexing arm is 2,0 kg. Maximum electrical power to drive the mechanism is below 25 W. The current drill diameter is about 15 mm and sample volume is about 400 mm^3.

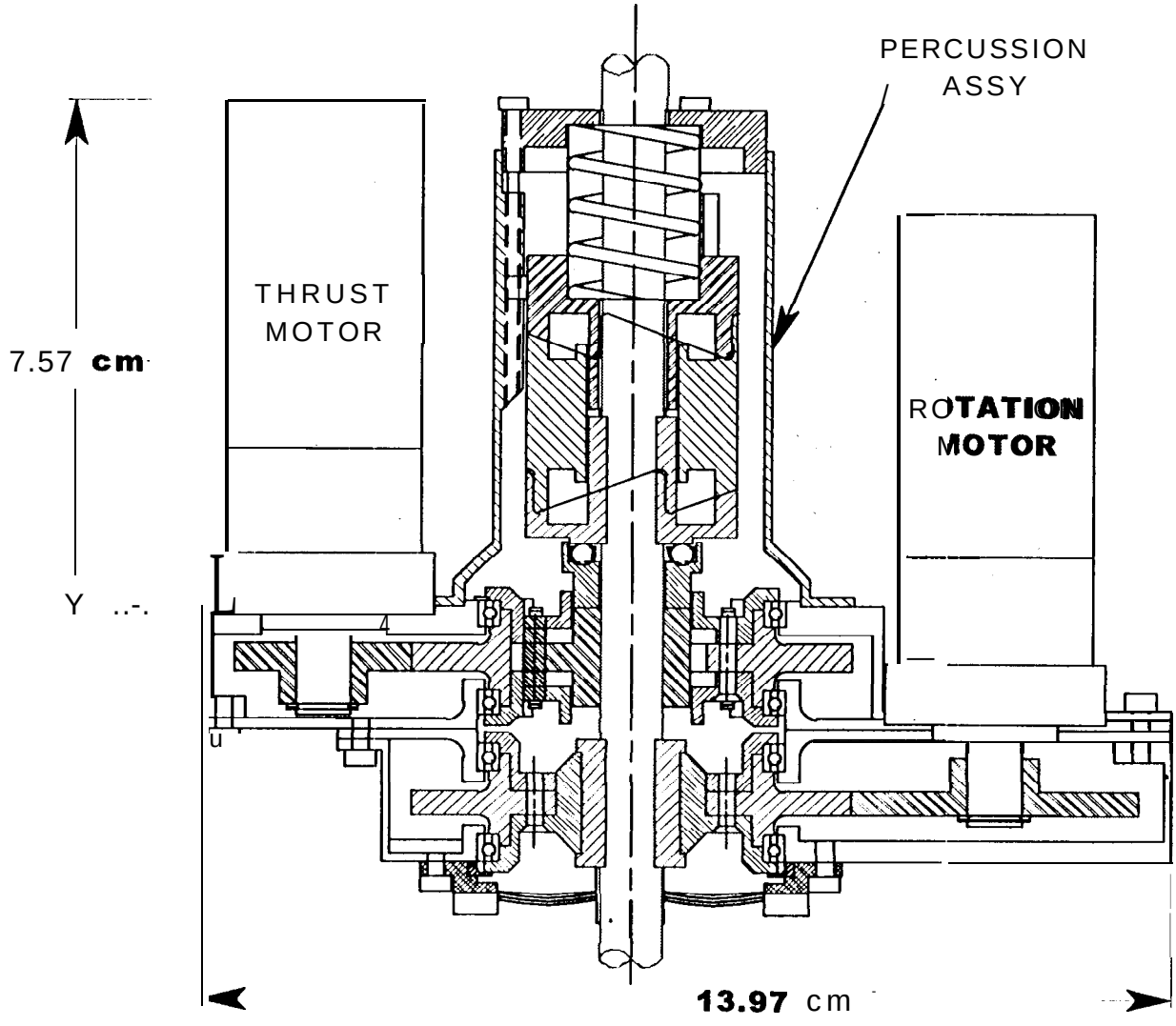

Figure 1. Compact Drill Mechanism Cross-Section

Operation

The drill is commanded to rotate clockwise (CW) and plunge until the surface is encountered. Software controls the speeds and feeds to optimize power and drilling speed. A discrete sample may be taken at any depth by opening the sample door in the end of the bit at that location. The sample door is opened by turning the drill in reverse (CCW) while plunging. Once the sample is acquired, the drill in driven CW while plunging to close the door. The sample and bit is extracted from the hole while rotating forward and withdrawing the drill bit.

The drill is launched with one drill bit attached to the end of the drill rod, but after capturing the first sample, the drill deposits the drill bit with sample enclosed into the science instrument. The drill then attaches to the next drill bit with a positive latch mechanism. Further drilling and sampling is done with the second bit, which is deposited in the second instrument. A third bit is picked up and drilling is continued.

Some advantages of such a removable bit design include the ability to have no contamination of samples. Also, removal of the bit, which is the crucible, removes the thermal mass from instrument. The bits are always sharp and failure of one bit would not impact the success of the mission. For future sample return projects, the multiple bits would allow for easy storage and return of multiple samples. The design of the removable bit drill eliminates the need for a secondary delicate and precise sample ejection system. Disadvantages include the challenge of autonomously picking up and putting down small mechanical parts.

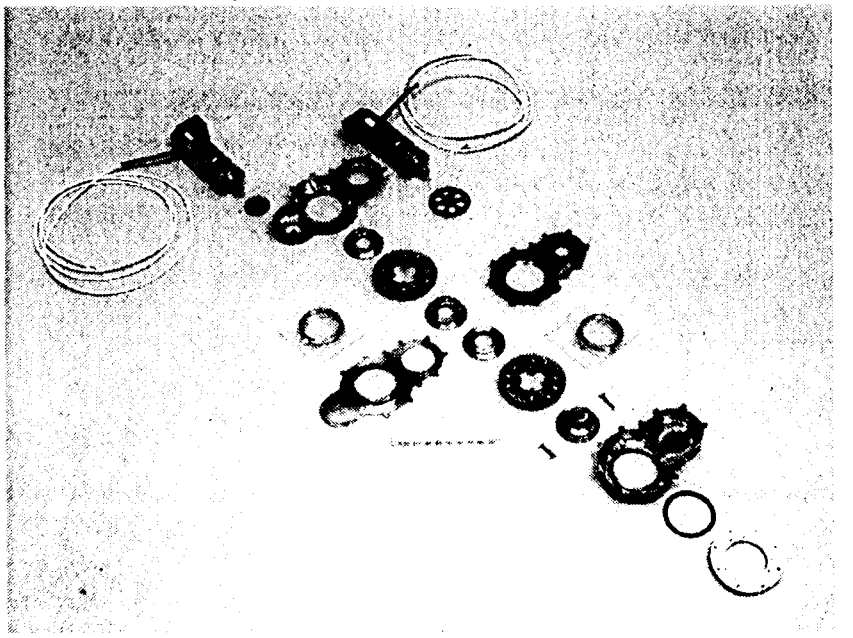

Figure 2. Compact Drill Mechanism Exploded View

Compact Drill Mechanism Components

Motors

In order to minimize mass and power, a dc brush motor needed to be developed for this limited-life application that could survive the –165°C vacuum environment.

Motor Trades

The extremely low operating temperature requirement warranted a conservative approach with respect to internal torque margins and demands on the lubricant scheme. To this end, a low speed high torque brush motor was developed to work in concert with a relatively low gain two stage planetary gearbox. This resulted in a slightly heavier motor than optimum with very high margins over internal frictional losses. Frictional losses were a major concern in the design since the characteristics of the lubricants were not well understood at the operating temperature. The brush DC motor was of a conventional wound armature laminated core design with a pair of permanent magnets attached to a stationary backiron that also acted as the motor housing.

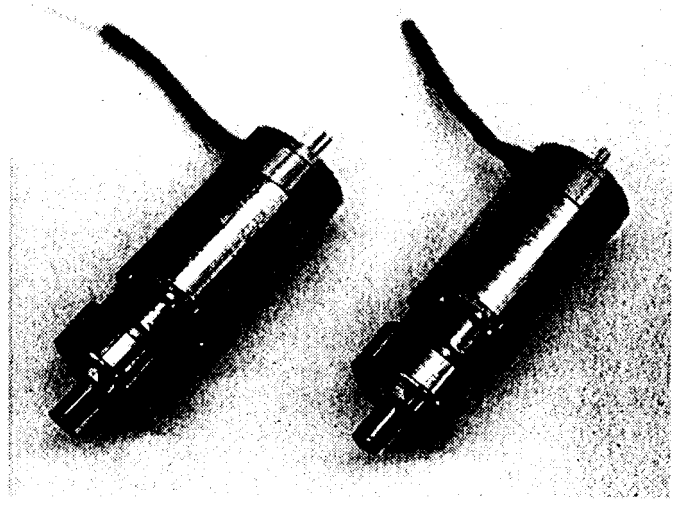

Figure 3. Cryogenic DC Brush Motors

Motor Brush Design

Based on previous experience with vacuum brush motor design silver graphite was chosen as the brush material. Since brush wear at the extreme low temperatures was also an unknown inspection ports were provided to allow for easy brush inspection. The silver graphite brushes transfer current to the rotor through a silver bar commutator.

Brush DC motors are wear limited devices, consequently reducing the rate of brush wear is almost always of paramount concern. There are two basic mechanisms of brush wear, mechanical wear and electrical wear.

Mechanical brush wear can be caused by excessive brush preload, high commutator surface speed, commutator runout, and/or bar to bar misalignment. Each of these contributors to excessive mechanical brush wear was addressed by the motor design. The size of the commutator was minimized to minimize the surface speed of the commutator with respect to the brush. By reducing the commutator surface speed brush life is enhanced considerably. The reduced commutator size also has the added benefit of making additional room for extra brush material again increasing the potential life of the brushes. The increased brush length reduces the reaction loads reacted into

the brush holder from the brush as it resists the drag force generated at the brush/commutator interface. Reduced reactions forces improve the brush's ability to maintain contact with the commutator even under adverse conditions of commutator runout and bar to bar misalignment. Commutator runout and bar to bar misalignment were controlled by final machining of the commutator at the rotor assembly level using diamond tip tools, Dynamic models of the brush holder assembly and commutator were developed to simulate the behavior the brush as it reacted against the commutator with manufacturing tolerances for worst case runout and bar to bar misalignment, The models were used to optimize the brush holder design and the ' brush spring force required. Originally the design of the brush holder included negator springs to provide near constant force brush pressure over brush life. Schedule constraints and long lead times conspired to force revisions to the brush holder to also allow the use of torsion springs. The completed units used torsion springs for providing brush preload. The torsion springs were designed to have a very low spring constant to minimize the change in preload as the brushes wore in and the initial preload was set to be on the high end of the brush pressure envelope.

Inadequate brush preload, excessive current density, and/or electrical arcing can cause electrical brush wear. Designing the brush with a large enough cross section to prevent excessive current densities eliminated problems due to improper current density. Electrical arcing, another significant contributor to electrical wear can be controlled through several different approaches. The right brush material for the operating environment is crucial. Standard graphite brushes that operate acceptably at sea level provide very poor performance in low pressure and vacuum conditions. This is because of the lack of humidity and atmosphere that supports the development of an oxide layer on the commutator, this film reduces both the mechanical and electrical wear of the brush.

Another contributor to electrical arcing is... This form of electrical arcing was controlled by increasing the number of commutator bars as high as possible. The maximum number of commutator bars feasible in the application was eleven. The higher number of commutator bars the less inductance and hence less inductive energy. This reduces the electrical stress on the brush.

Brush arcing was then further reduced by the addition of a ceramic capacitor in parallel with the brush assemblies, The ceramic capacitor acts to suppress arcing of the brushes by reducing the effective source impedance at high frequencies.

Armature

Wire EDM was used to manufacture the armature core from a bonded laminated stack of Ml 9 steel. The wire EDM process is ideal for low volume motor development applications since it allows design iterations to be incorporated without expensive and time consuming tooling changes. Kapton insulation was used to insulate the rotor core slots in-place of a typical electrostatic coating over concerns that the electrostatic insulation might crack and flake off at low temperatures, The trade-off for using the

Kapton insulation is that the rotor end-turns are slightly longer thus increasing the motor size.

Magnetic Design

Magnetic models of the motor were developed to predict the motor performance and size the motor for the application. The magnetic analysis allowed optimization of the motor backiron, magnet, and rotor core geometry for reduced weight. Neodymium-iron-boron rare earth magnets provided additional weight savings through increased energy densities over alnico and samarium based magnets. Initial testing with the motor control system indicated that motor detent would need to be reduced to improve the low speed controllability of the units. Since both the armature core and magnets were manufactured using the wire EDM process it was relatively easy to manufacture new skewed magnets to replace the original straight magnets and achieve the desired reduction in motor detent.

Temperature Performance

Due to the extremely low operating temperature of the motor the winding resistance drops from TBD ohms at ambient to TBD ohms at -165°C. Consequently the current draw increases at the reduced temperatures and performance is actually enhanced over ambient performance considerably. Motor predicted performance versus actual performance at -165°C is presented in figure TBD.

It has been found that the current motors are not powerful enough to drill some rock samples. This year's goal was to design a motor that used minimal power to see if it could still drill the harder samples. To optimize power usage and still use common motors, a new motor design will be developed that is slightly larger diameter with **more** output torque. The detent torque will be reduced by skewing the magnets and mass will be reduced by using more advanced materials and optimizing the design of some the more mass inefficient parts. The motor that drives the thrust component would have fewer stages in the planetary gearbox to increase speed, since torque is not the limiting . value. The rotation axis would be driven by this higher torque motor with the larger gearbox so that it can be run under greater load to cut rock samples without stalling. With the added torque available the percussion system could be enhanced by using a larger spring.

wore off and allowed the 440C and maraging steels to gall. Also, dry bearium retainers and bushings galled.

The higher speed, low load bearings in the motor were also lubricated with bearium retainers. These seemed to perform without galling, but were rather noisy.

Percussion

Picture of Cams

Drilling in hard, brittle materials is usually assisted by using percussion. Percussion has been incorporated into the drilling mechanism by using axial toothed cams that load a compression spring which then accelerates a large mass. To make the percussion system more mass efficient, the accelerated mass is made up of the three cam pieces. Most of the mass is accelerated for CW rotation, while CCW rotation only accelerates the small cam. Bare 440C and Nitronic 60 have been used for the cams with good results. In order to decrease the friction that the small motors had to overcome for the ambient tests, some Bray 602 was added.

The percussion cams operate at 5 strikes per revolution in the CW drilling direction. When storing samples and rotating in the CCW direction, the drill still strikes at 5 hits per revolution, but with reduced energy due to the mass division.

It was found that percussion generated by this spring-cam system did not improve drilling performance in most materials. It is believed that the arm is not stiff enough and that the energy imparted is not high enough to yield the typical drilling improvement that is seen in commercial hammer drills.

Planetary Gear Box

The planetary gearbox and secondary spur gears, with associated bearings and lubricants needed to be developed to function in this challenging environment. The planets and sun gears in the two-stage planetary gearbox are made out of maraging Vascomax C250 steel and lubricated with a tungsten-disulfide molecular coating. The bearings in the first stage are modified 440C bearings with ceramic balls and lubricated with retainers made out of bearium, a copper, lead and tin alloy. The second stage planets are simply bushing supported. The tungsten-disulfide coating performed well in ambient conditions, but failed after one and a half hours at cryo/vac. The failure appeared to be wearing of the lubricant and subsequent galling of the maraging steel.

Ferro-Tic pins and bushings were installed which resulted in galling failure in one and a half minutes. Figures XX-XX. Ferrotic is a metal matrix composite that contains hard rounded titanium carbide grains in a steel matrix. Notice in the micrographs the visible Tic grains that appear black. For this material to perform well, one must polish the parts such that the matrix is worn down enough to expose the TiC grains but not so much that they fall out. Our parts had not been polished enough, so the matrix material was able to contact the matrix material of the contacting part. Although this material shows promise of performing well, it was abandoned due to its process sensitivity.

Figure 5. Ferro-Tic Pin with Galling

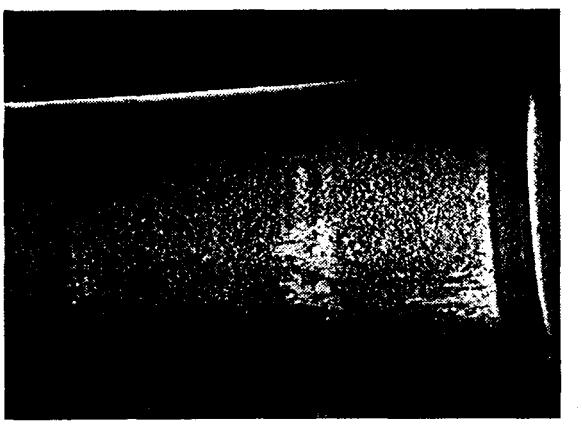

Figure 4. Ferro-Tic Pin with Galling

Nitronic 60 pins and bearium bushings were installed and tested and failed in air due to bearium galling. Although bearium is good as a bushing material when wet lubed, it tended to gall under dry operation. Due to this failure, the bearium retainers in the large bearings were inspected for wear. The retainers were slightly misshapen and the holes elongated. Applying a small amount of Bray 602 grease to the large bearings reduced the loud squealing that had been present with the dry bearium retainers.

Secondarv Gears

Tungsten carbide was chosen for the secondary spur gears to eliminate galling and need for lubrication. Wire EDM was used to cut these gears to a AGMA class 14 quality. While these gears have good anti-gall properties and high rupture strength, they are more than twice as heavy as steel. These gears performed well under ambient conditions. These were later changed to Titanium Carbo-Nitride to save weight. Figure XX. These performed well both at room temperature and - 165"C. During FY98, the bearings in the motors and large bearings that support the secondary gears will be made entirely out of Titanium Carbo-Nitride.

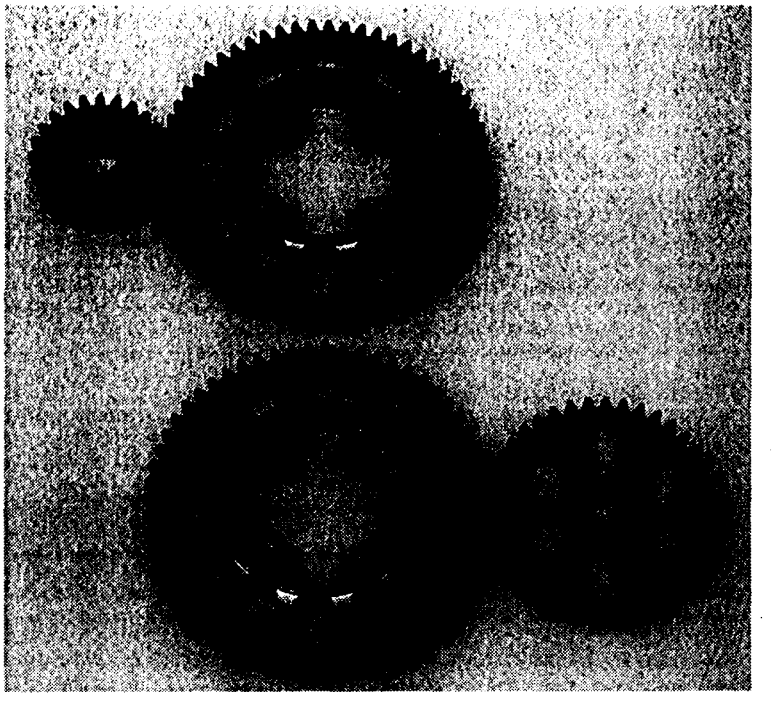

Figure 6. Titanium Carbo-Nitride Gears

The drive nut was originally made out of tungsten carbide, but fracturing of the thread surfaces required a change in materials. Due to the cryo/vac environment, bare Nitronic 60 was selected and has been performing well under ambient conditions and at -1 65°C and will be tested at cryo/vac soon.

Lubrication

Lubrication for cryogenic, vacuum operation **has long been a design challenge, which has usually** been solved by isolating the friction components, lubricating them with grease, and heating them. In the new age of smaller, lower power spacecraft, the luxury of heating mechanical components will soon disappear. To prepare for this, the hybrid ceramic/stainless steel bearings with bearium retainers that were developed this year will be further improved to decrease friction and increase life. All titanium carbo-nitride bearings have been fabricated and tested at Mecanex S.A. in Switzerland by Dr. Volker Gass. These bearings have superior friction properties and still have high toughness properties at cryo temperatures. No liquid or dry lubrication is used, thus eliminating the problems of grease viscosity and dry lube buildup. Having had positive results with the titanium carbo-nitride secondary gears, it is anticipated that this will be a worthwhile study.

Several of most significant failures in this mechanism were due to incorrect lubrication. As discussed in the Planetary Gearbox section, the tungsten-disulfide molecular coating

Drill Bits

There are two features that make these drill bits unique and elegant. The sample chambers are inside the bit and the bits are interchangeable. Figure xx and xx. The swivel-head bit was developed to eliminate the need for an additional motor to be able to drill to any depth, take a sample at that depth, and reduce sample mixing with material along the depth of the hole. The swivel-head is passive and only requires counterclockwise rotation of the bit to open the chambers. Once the sample is acquired with multiple CCW revolutions, the head is swiveled closed with multiple CW rotations. Figure XX. The sample is fully contained in the bit. By making the bit removable the sample could stay in the bit and the bit used as the crucible for science experiments.

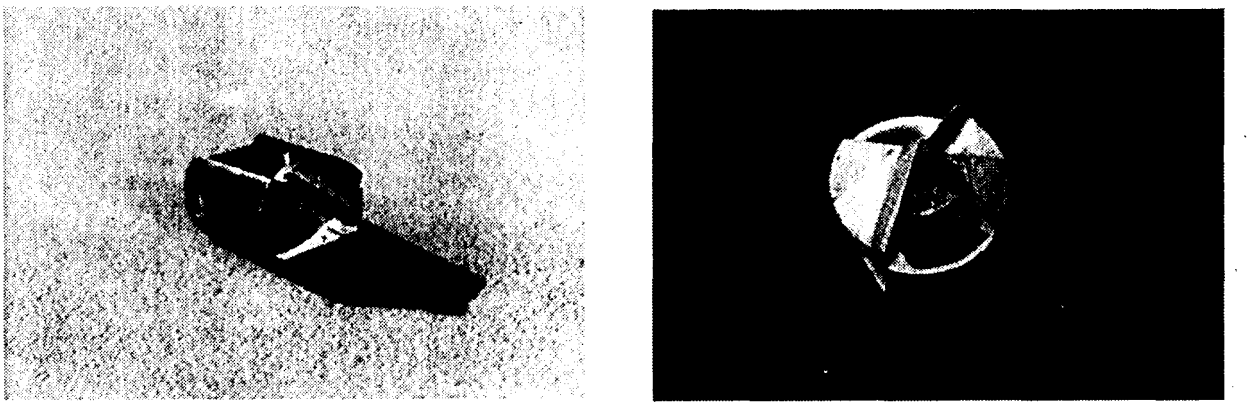

Figure 7. Drill Bit with Head Swiveled Open

Past designs of the drill had some type of sample acquisition area that would be filled in some way and then emptied by some mechanical means into a science instrument. The advantages of interchangeable bits was soon discovered. Interchangeable bits allow the use of different types of bits depending on sample type, the use of the bit as the crucible, the acquisition of several discreet samples for a sample return mission, the elimination of a secondary mechanism to extract the sample, and the ability to replace a damaged bit.

The current drill bit was custom designed to have high strength, low wear, and high sample volume. Eight different bit styles were tested in six different material at different drilling forces and rotation rates. It was found that a split tip design worked best, with a 15° rake angle and 10° relief angle. The notches seen in the rear row of bits did not seem to affect drilling performance.

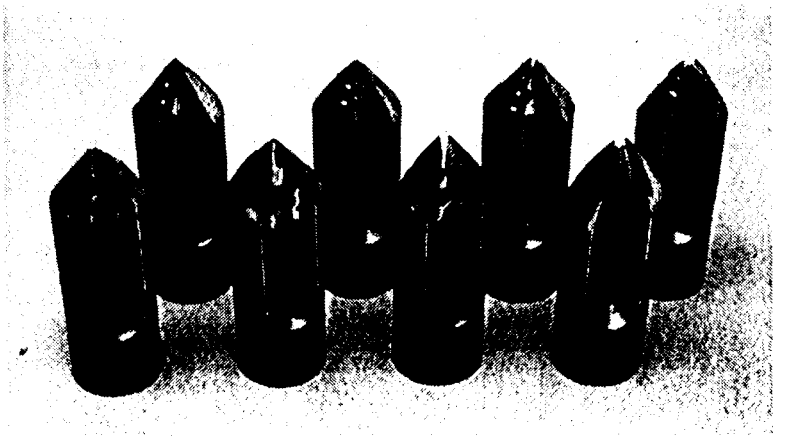

Figure 8. Test Drill Bits

Quick Release

The quick release is composed of two button bars separated by a compression spring. Figure 9. By pressing in on the upper buttons, the lower ones retract to allow engagement with the bit. Knife-edge pivots are used to make it more tolerant to debris.

The quick release design functions well, but accurate placement and repeatability are required. Testing has been completed that autonomously dropped off a bit in the right hand port and picked up a new bit from the left port and then continued drilling. It was found that a mechanical indexing feature is necessary to ensure alignment between the bit and the bit pick-up device.

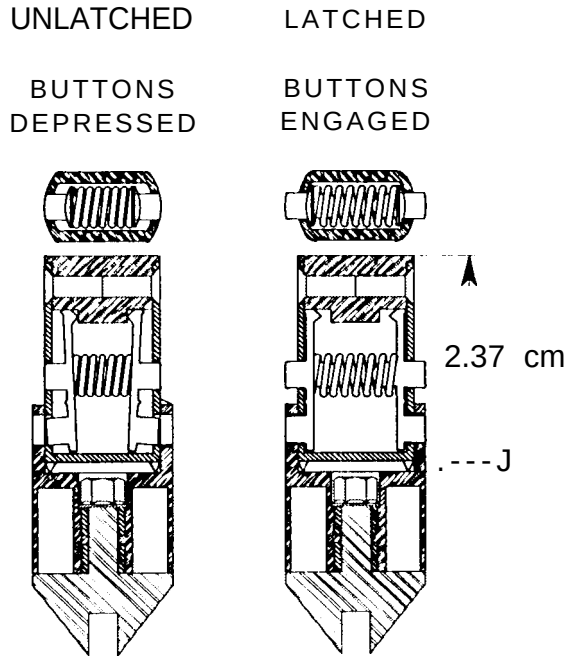

Figure 9. Drill Bits Cross-Section

Mechanical Testing

Mechanical testing of six different materials has been completed. Both bending/shear and compression tests have been done in order to determine a correlation between drilling rate and mechanical properties. From the hundreds of drilling tests using eight different bits at three rotational speeds with and without percussion at two different forces it has been determined what are the most significant factors in drilling.

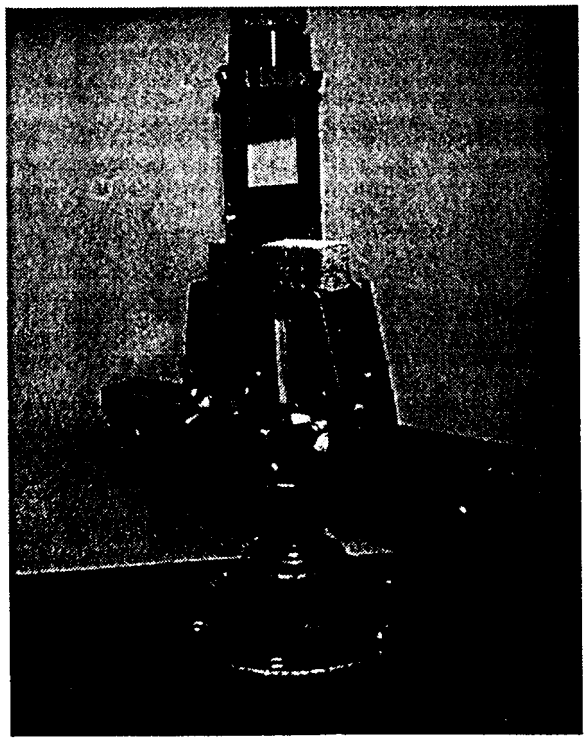

Figure 10. 3-Point Bend Test

Materials Data Correlation

By measuring the thrust and torque imparted on the drill bit while drilling, substantial data was collected and processed for each material and bit. What was found was a signature for each material that could be related to the 3-point bend data. The drilling rate was inversely proportional to the 3-point bend strengths, but unrelated to the compression strengths,

Control Svstem

The control system uses a three-axis force transducer to determine thrust, lateral, and torque to either drill at a specified force or rate. The software will determine drill thrust and rotation rates based on sample hardness, cohesiveness, texture and maximum allowable thrust imparted to the lander or rover. Data regarding the speeds and feeds will be recorded and compared to analog material data to make assessments of material properties. This is the first known adaptive drill that is also a science instrument to acquire data about the material being drilled.

The software and motor control system is designed to be able to drill any sample by either manually specifying drill thrust velocity and rotation speed or using force control mode which automatically modulates the speed and feeds to maintain the optimal or highest drilling rate. These control sequences are being integrated into a single autonomous sequence that will undock, index, drill, acquire, transport, deposit, and pick up new drill bits. Since by measuring speeds and feed rates and doing force versus deflection testing will determine the material characteristics, more analog materials will be tested and cataloged. These cataloged data will enable the flight drilling instrument to make comparisons to earth analogs and customize its drilling.

The drill is controlled by an adaptive drilling software system. This software will · determine drill thrust and rotation rates based on sample hardness, cohesiveness, texture and max allowable thrust imparted to the lander. For microgravity landing environments found on asteroids and comets, drilling thrust loads must be controlled under the holding abilities of the anchoring system and yet high enough to provide efficient drilling. There are maximum rotation and thrust rates above which power efficiency is diminished, so the drill is able to recognize this and control to lower rates.

Conclusion

In conclusion,

Acknowledgments

The work discussed in this paper was performed at the Jet Propulsion Laboratory under the . . .

References

Dr. Volker Gass
Doug Petercsak
Shenandoah Wang
Web site for Exploration of Small Bodies Task: http://esb.jpl.nasa.gov/
Web site for American Technology Consortium: www.consortium.com