Ground- and Space-based Optical & IR Stellar Interferometry

Xiaopei Pan

1. Mark III Optical Interferometer
2. Palomar Testbed Interferometer
3. Space Interferometry Mission
4. Stellar Diameters, Masses & Temperatures
5. Parallax with μas Precision
6. Wide- & Narrow-angle Astrometry

Star,

an ideal point source in physics ?

or too big ?

or multiple components ?

or substellar companions ?

Why Interferometry ?

1. High Resolution
2. High Accuracy

Why Challenging ?

1. Pathlength compensation
2. Two parallel beams
3. High sampling rate

Why Booming Now ?

1. Fast CPU
2. Laser metrology
3. Active optics
4. New detectors

The Mark III Stellar Interferometer

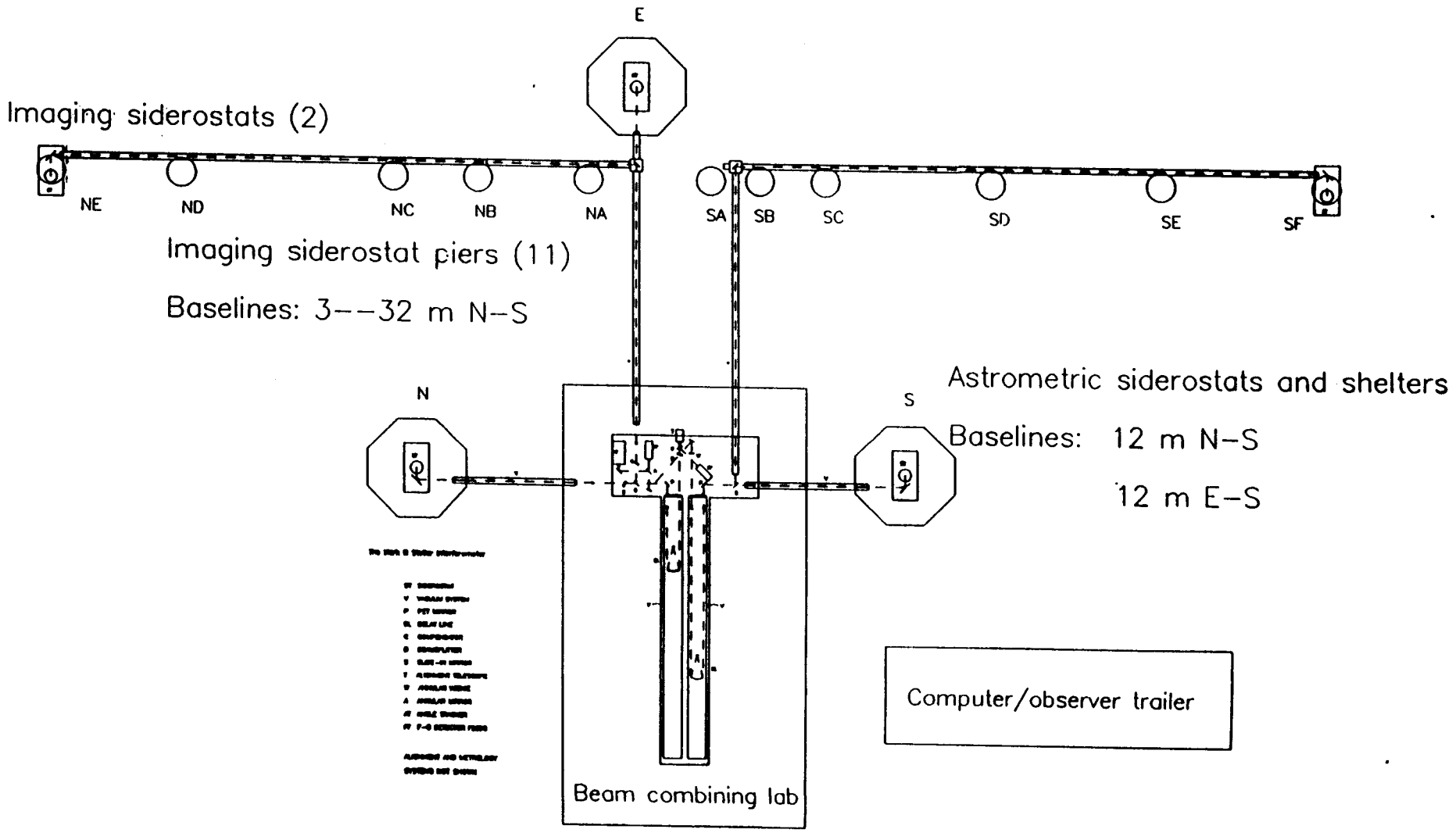

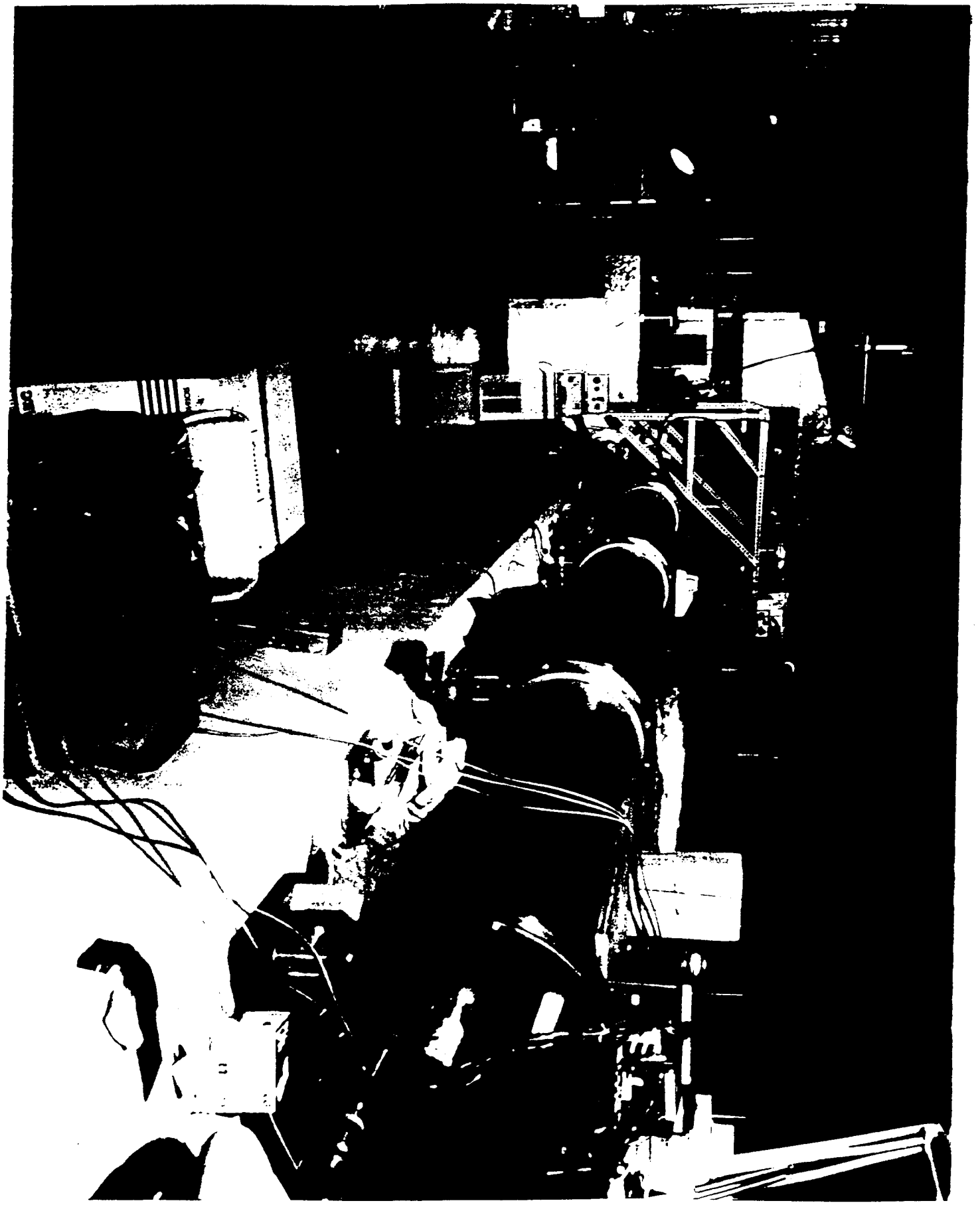

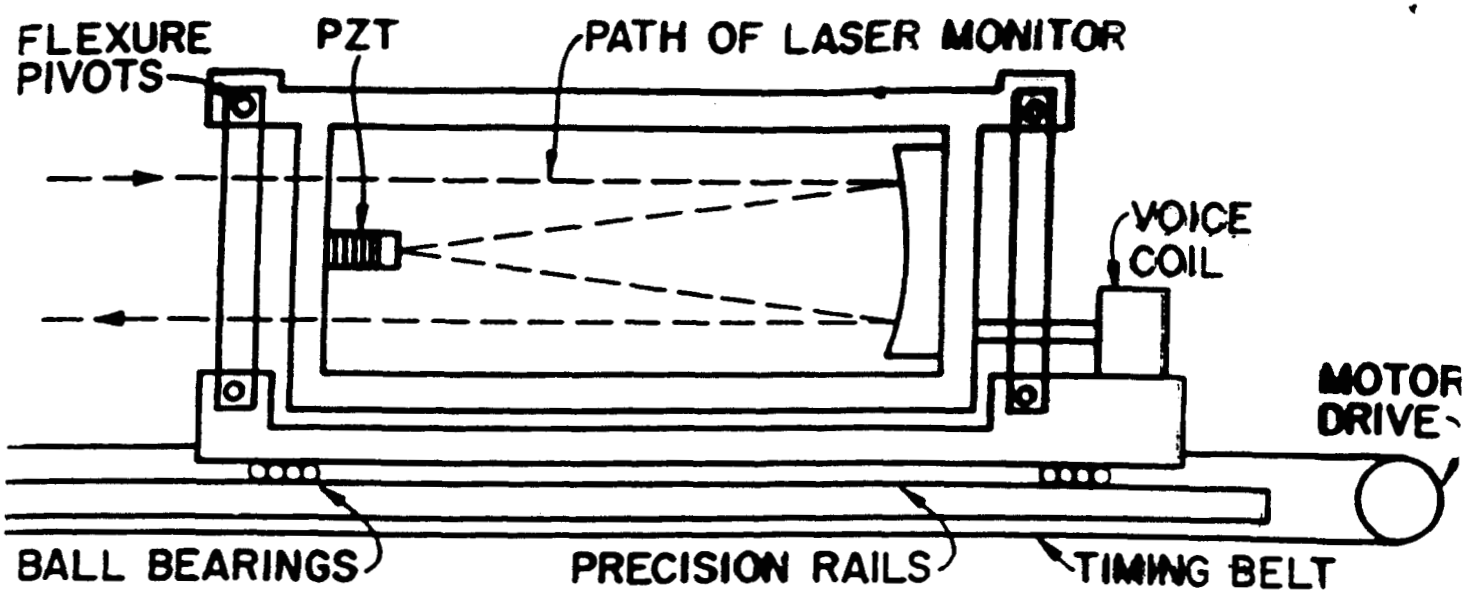

Three stage (PZT, Voice Coil, Motor) optical delay line

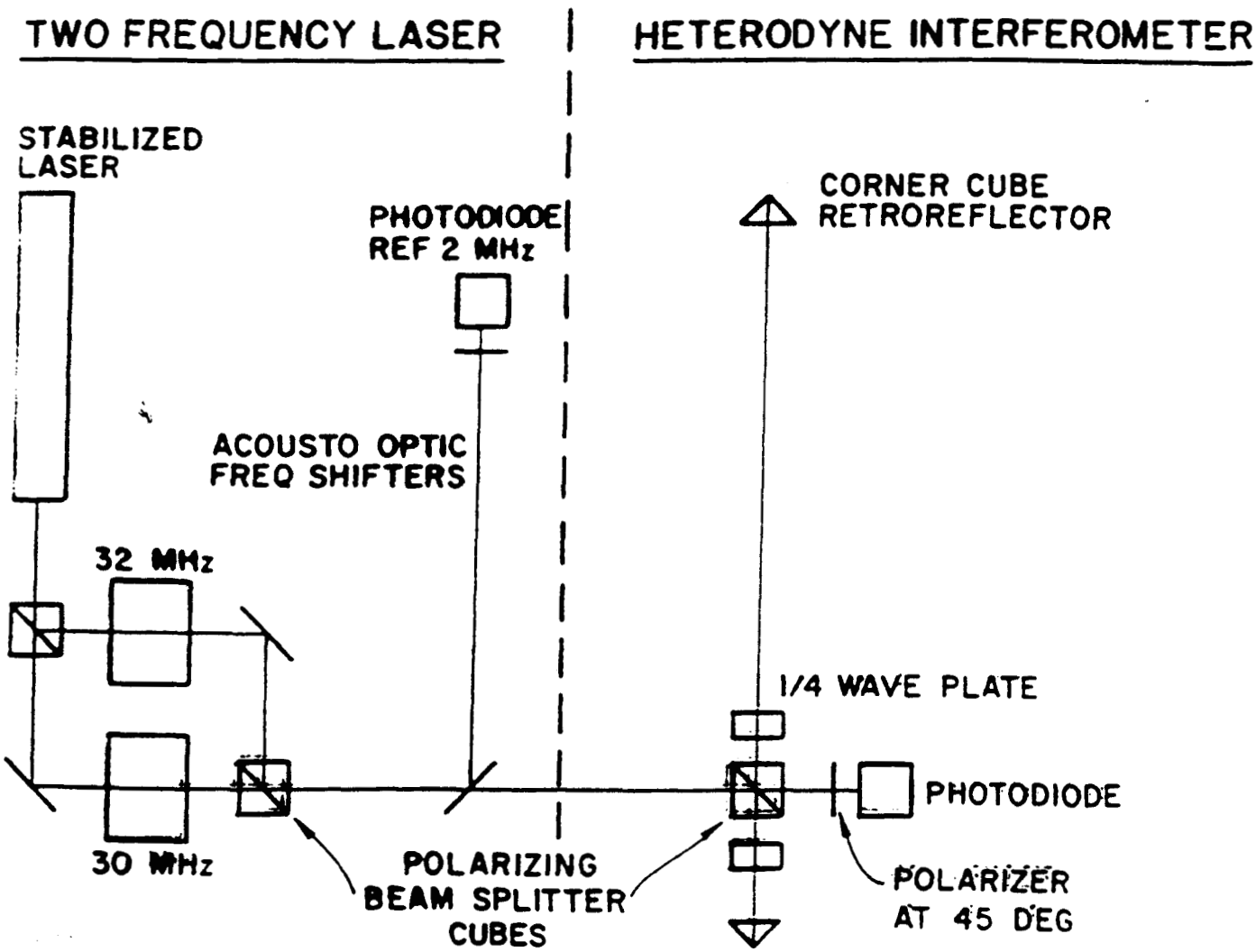

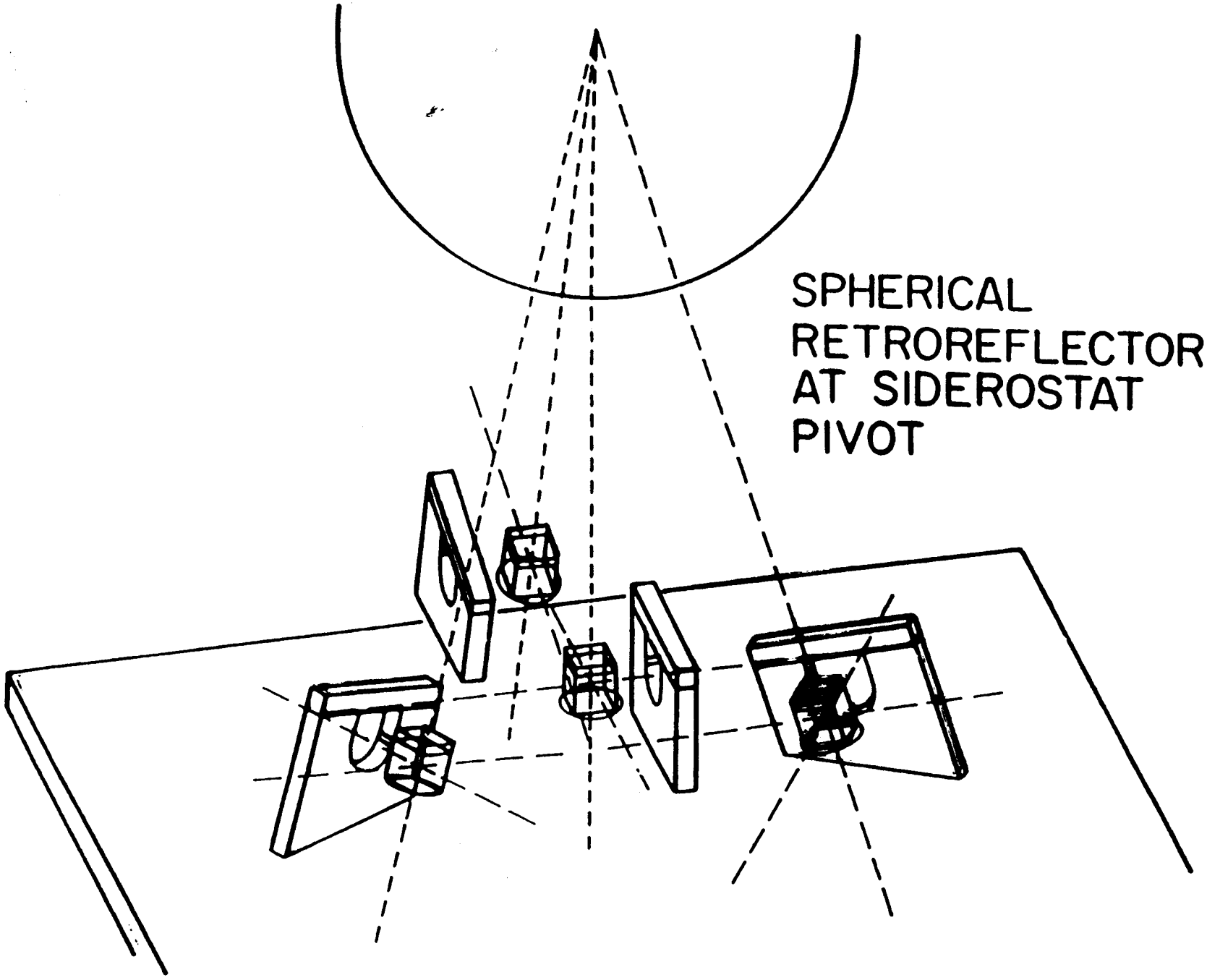

Laser metrology system for baseline vector monitor

SIDEROSTAT WITH 4-LASER PLATE

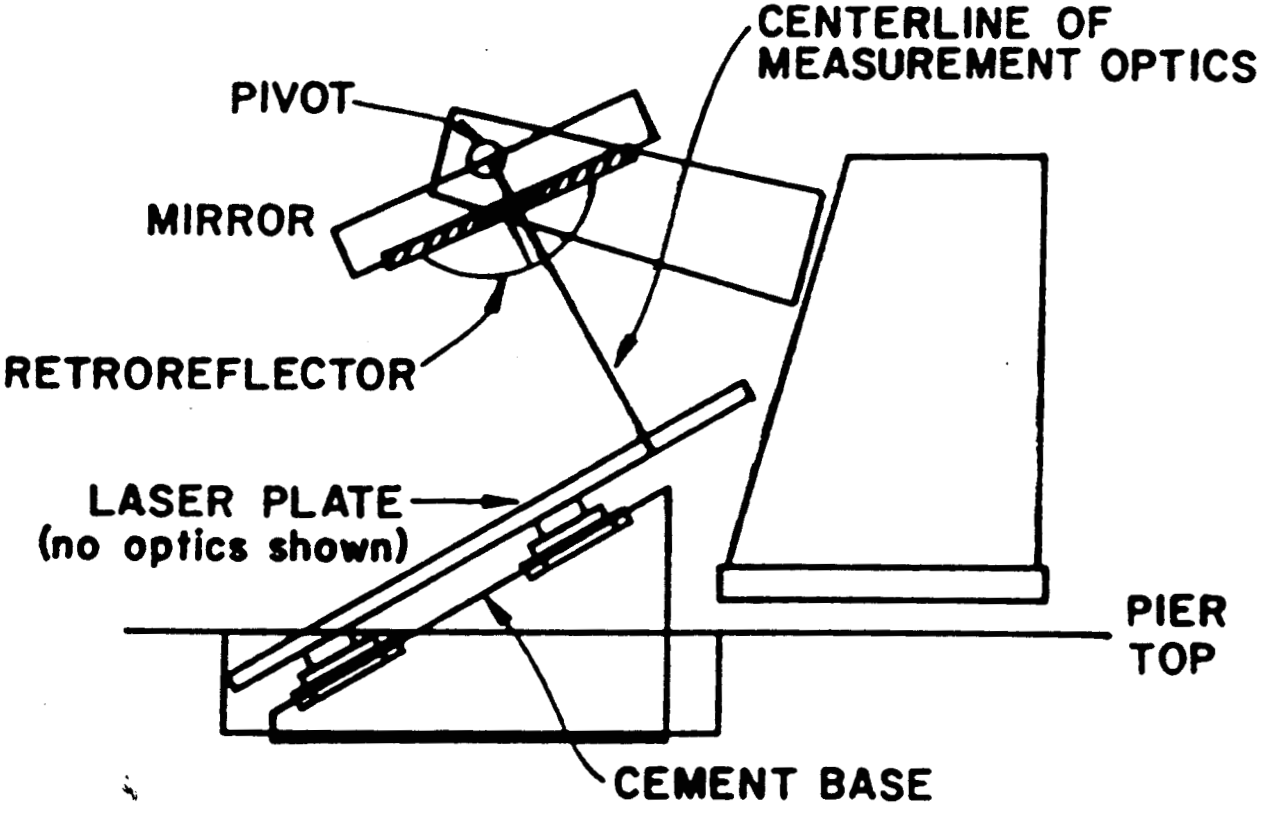

Arrangement of siderostat and laser plate on Pier

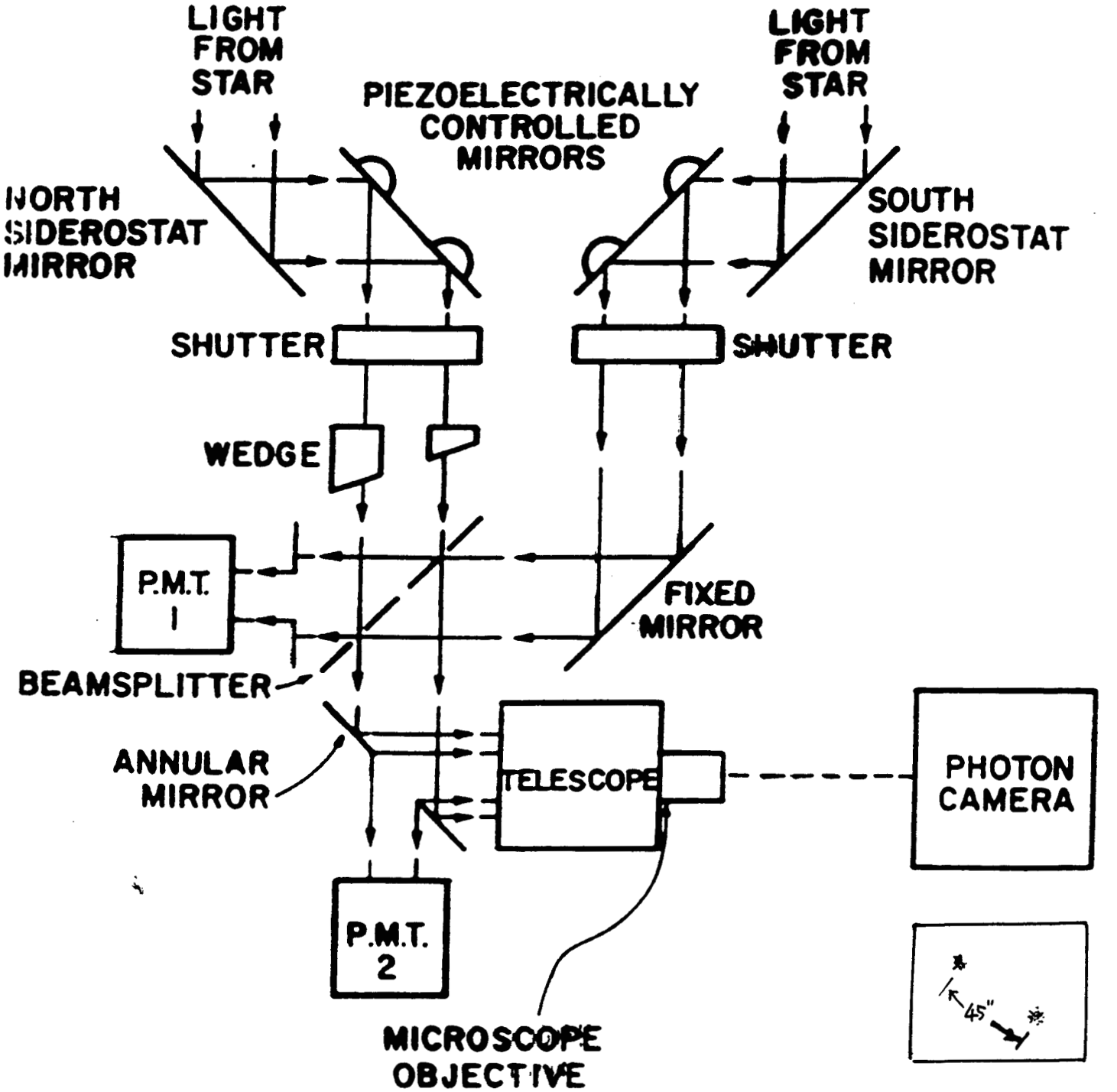

OPTICAL LAYOUT OF STAR TRACKER

Draft

Palomar Testbed Interferometer

Resolution	2 mas
Wavelength	2.0 - 2.4 μm
Faintest Star	5 mag
Largest Star	4.3 mas
Smallest Star	0.5 mas
Largest Sep.	110 mas
Smallest Sep.	2 mas
Dynamic Range	4 mag

Top-Level Parameters

- 2-element interferometer, 100 m maximum baseline
  - Expect atmospheric error ~30 uas / hr for two stars 15" apart
- 40 cm effective aperture
  - Good match to atmosphere:
    - 1 r0 at 2.2 um (fringe-tracking wavelength)
    - 3 r0 at 0.7 um (star-tracking wavelength)
- +/- 40 m delay range
- Optimized for narrow-angle astrometry
- Palomar Mountain site

Description of Palomar Interferometer

Pointing System :	Siderostats
	Acquisition system
	Dual-star feed
	Star tracker
Phasing System :	Primary fringe tracker
	Secondary fringe tracker
	Delay lines
	Constant-term metrology
Control System :	VMEbus-based system
	Multiprocessing architecture
	Clean partitioning of functions

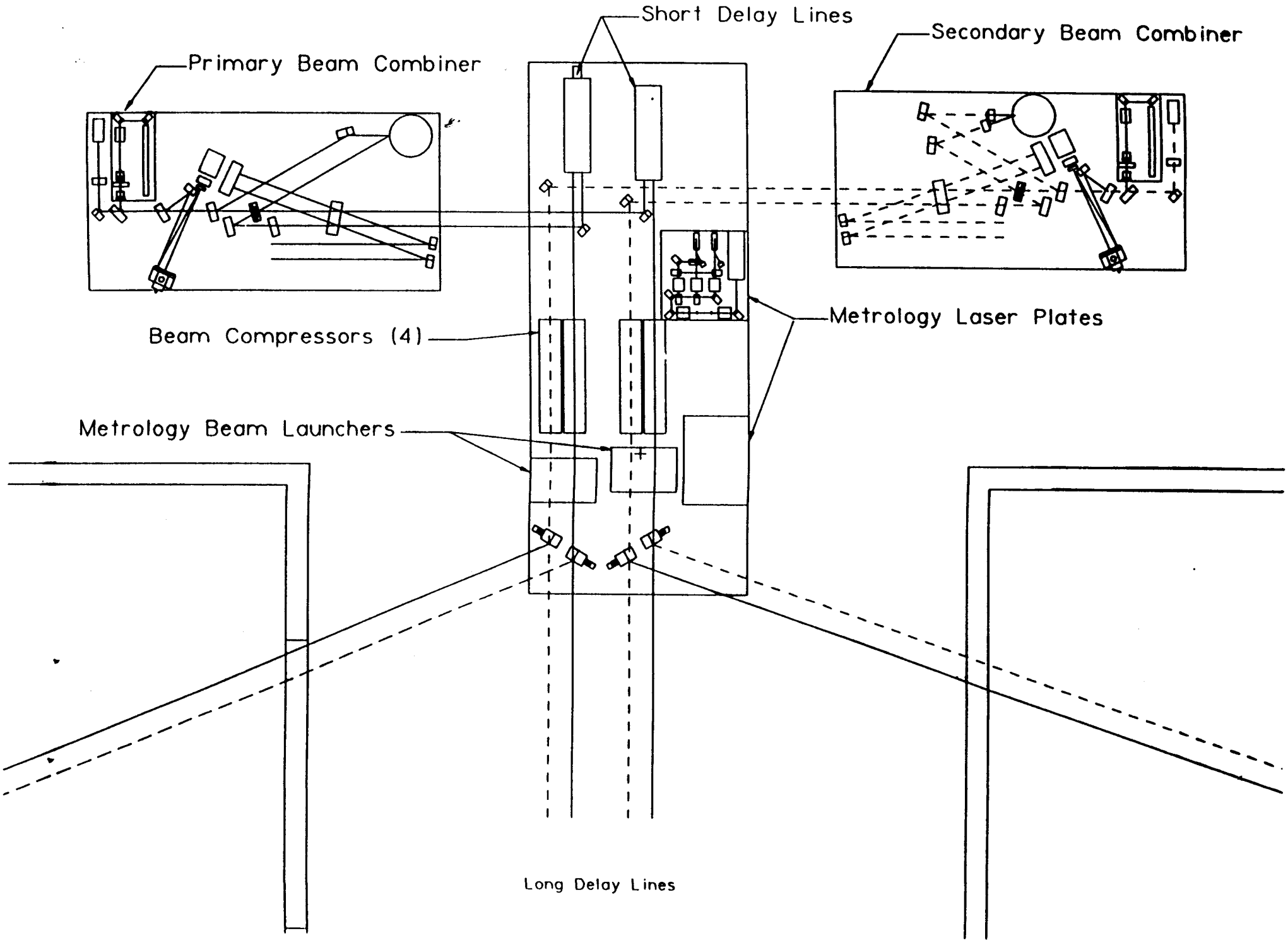
Short Delay Lines
Secondary Beam Combiner
Primary Beam Combiner
Metrology Laser Plates
Beam Compressors (4)
Metrology Beam Launchers
Long Delay Lines

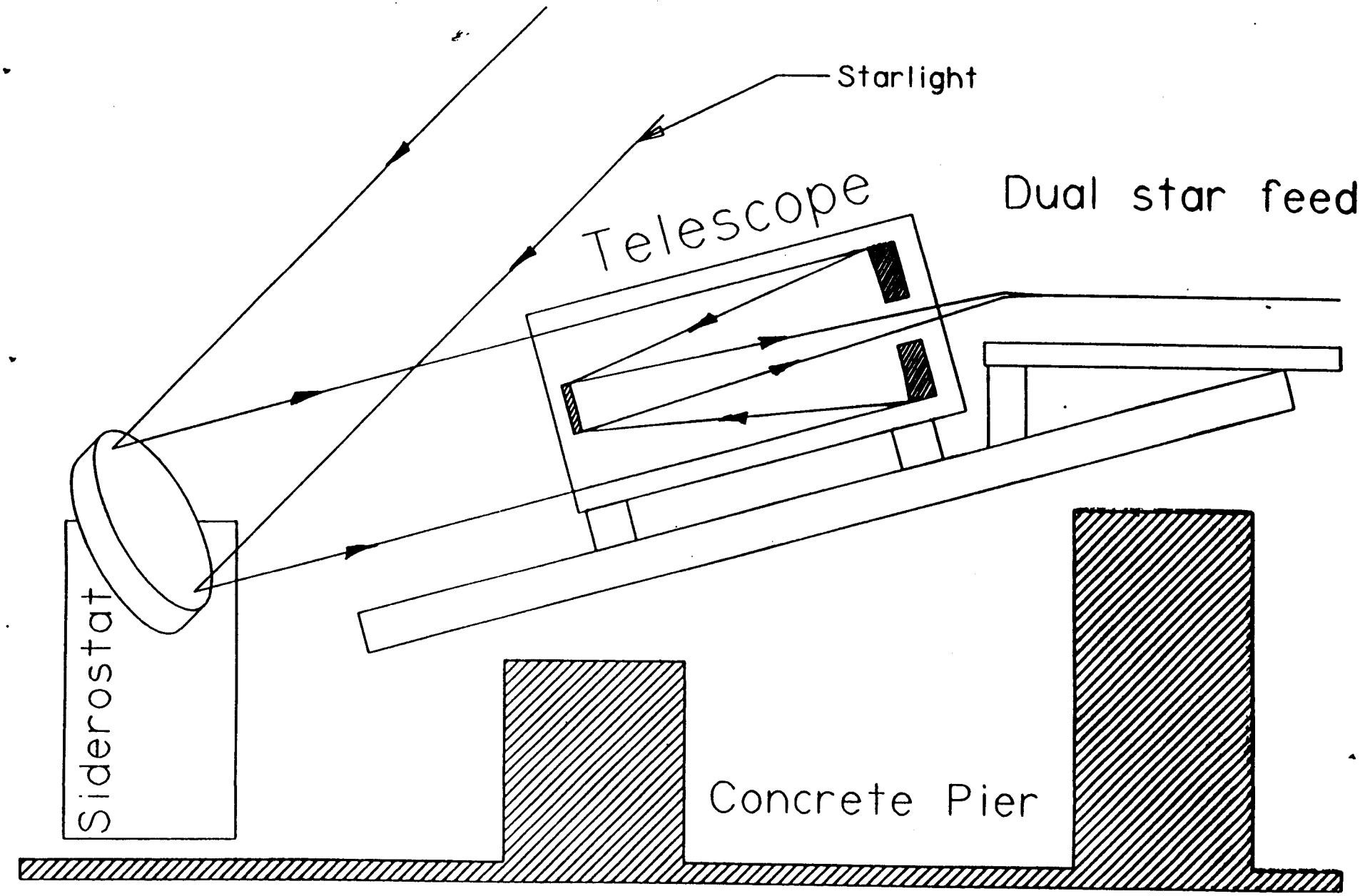
Starlight
Telescope
Dual star feed
Siderostat
Concrete Pier

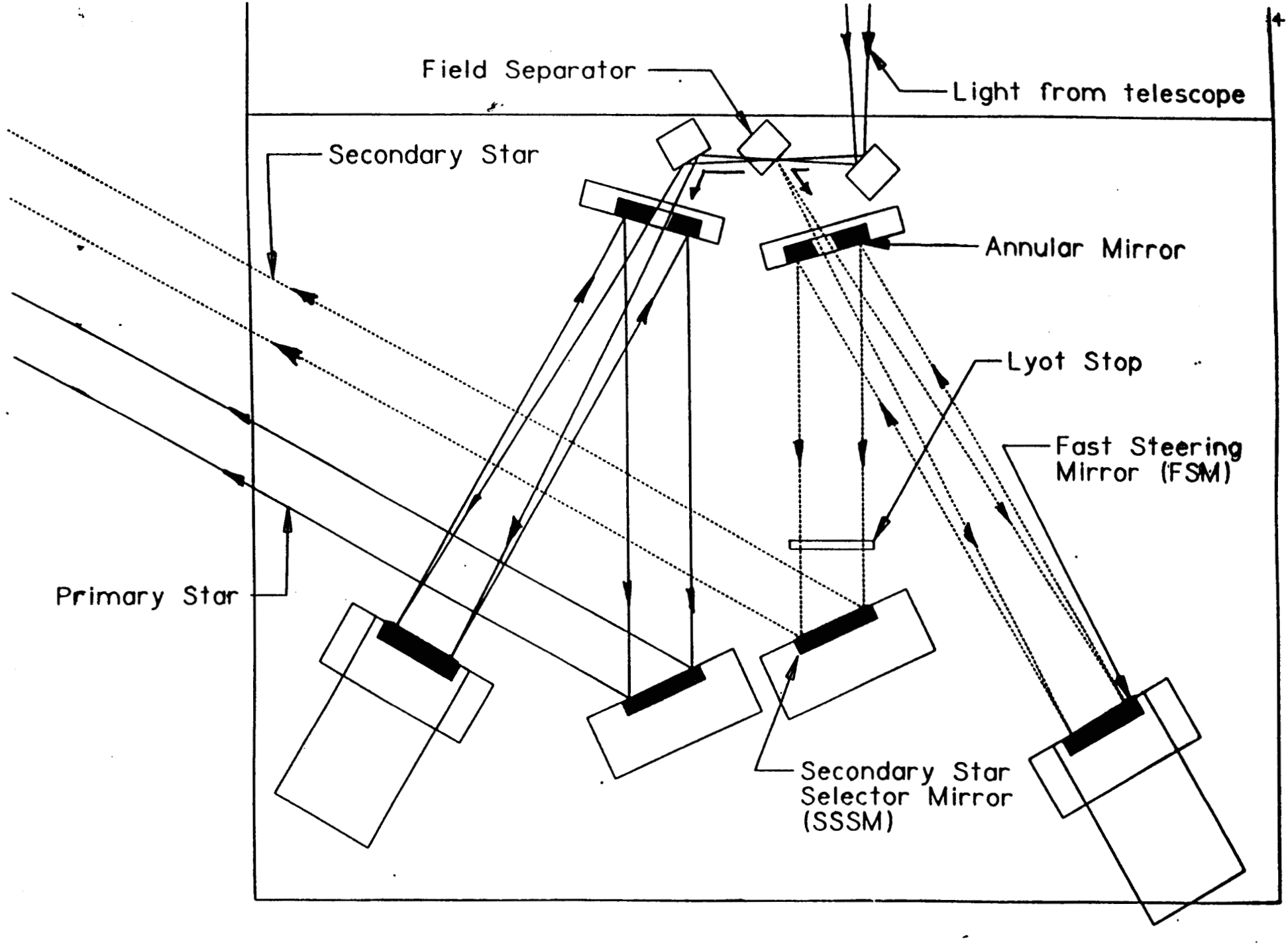
Field Separator
Light from telescope
Secondary Star
Annular Mirror
Lyot Stop
Fast Steering Mirror (FSM)
Primary Star
Secondary Star Selector Mirror (SSSM)

Acquisition System

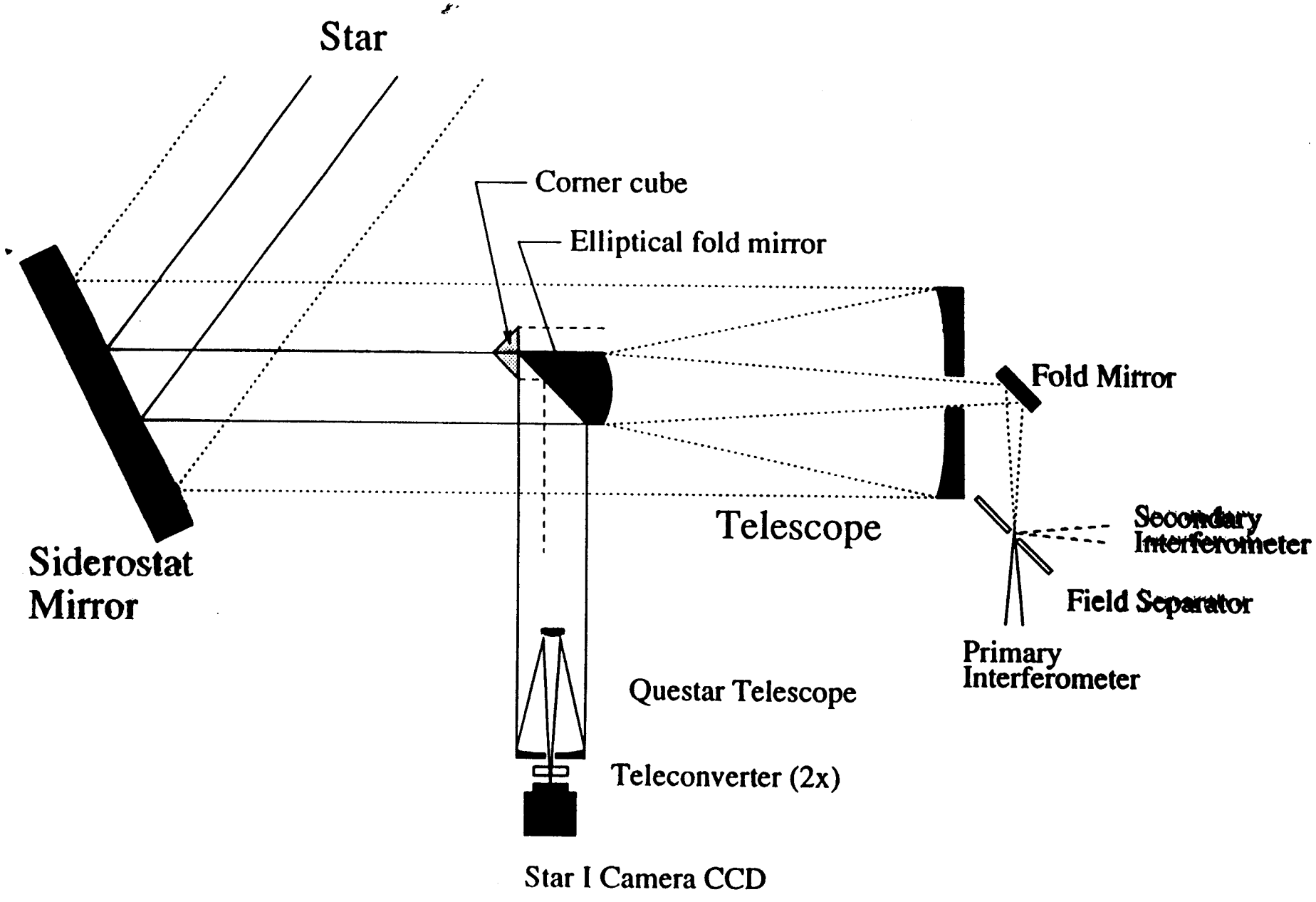

Delay Lines

- Long delay lines
  - 20 m physical range each
  - 4-stage servo, high tracking speed capability
    - 50 mm/s @ 15 nm rms
  - Delays both primary and secondary star (2 7.5 cm beams)
- Short delay lines
  - 20 cm physical range
  - 2-stage servo
  - Delays primary star only (2 cm beam)

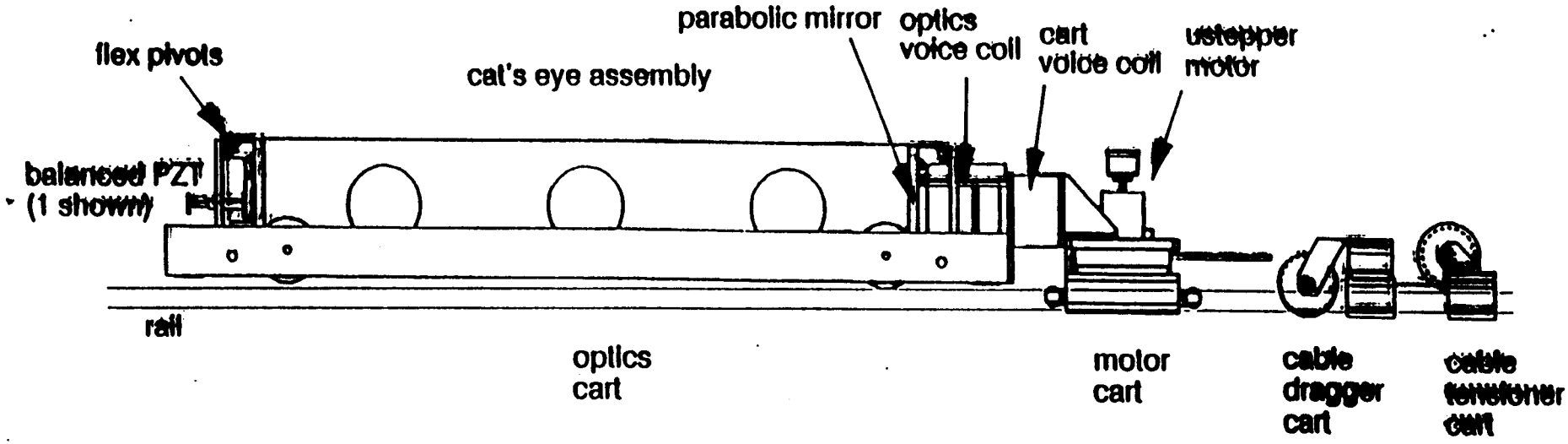
flex pivots
balanced PZT
(1 shown)
cat's eye assembly
parabolic mirror
optics
voice coil
cart
voice coil
ustepper
motor
rail
optics
cart
motor
cart
cable
dragger
cart
cable
tensioner
cart

Star Tracker

- Configuration
  - Photon-counting APD quad cell detector, sensing from 0.7-1.0 um
  - Chopper allows use of single detector for both beams in each beam combiner
- Control functions
  - High bandwidth tracking on primary (bright) star
  - Low bandwidth tracking on secondary (dim) star, with feedforward of high-frequency tilt information from primary star
  - Automated alignment to instrument boresight

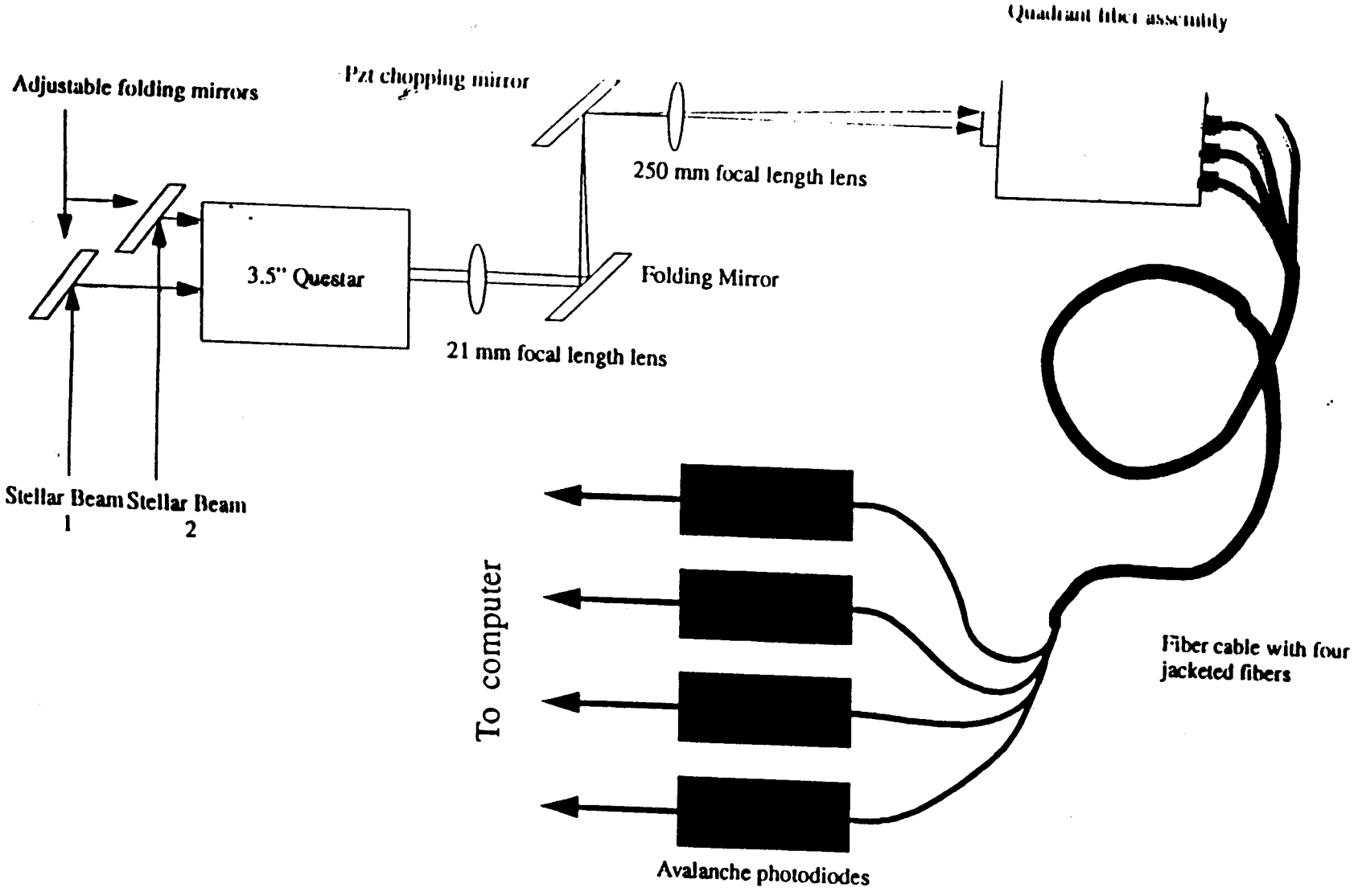

Narrow Angle Star Tracker Optical Layout

Dual Object Interferometry

Simultaneous fringe measurement of two stars for differential astrometry

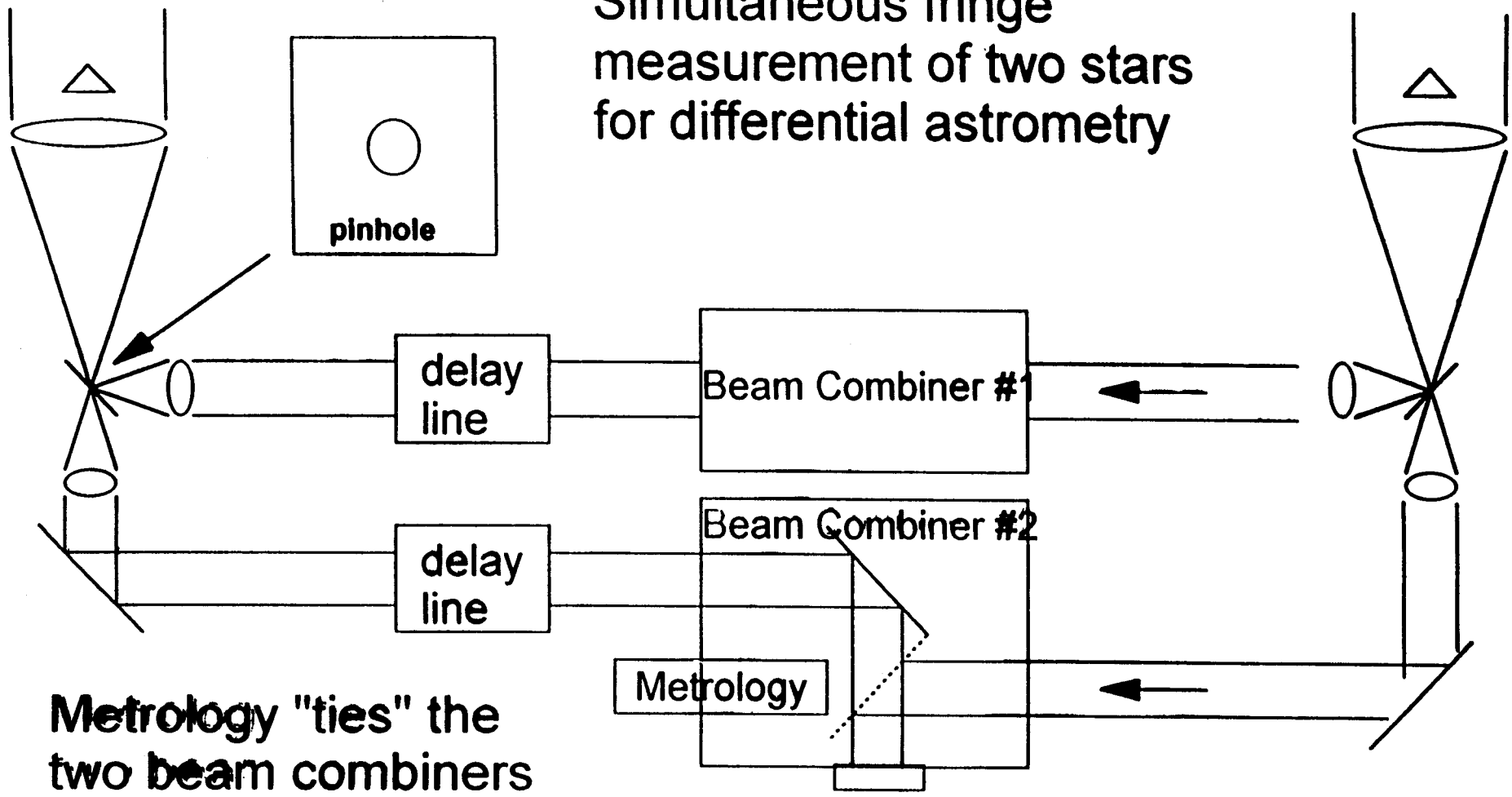

Metrology "ties" the two beam combiners together (~10nm)

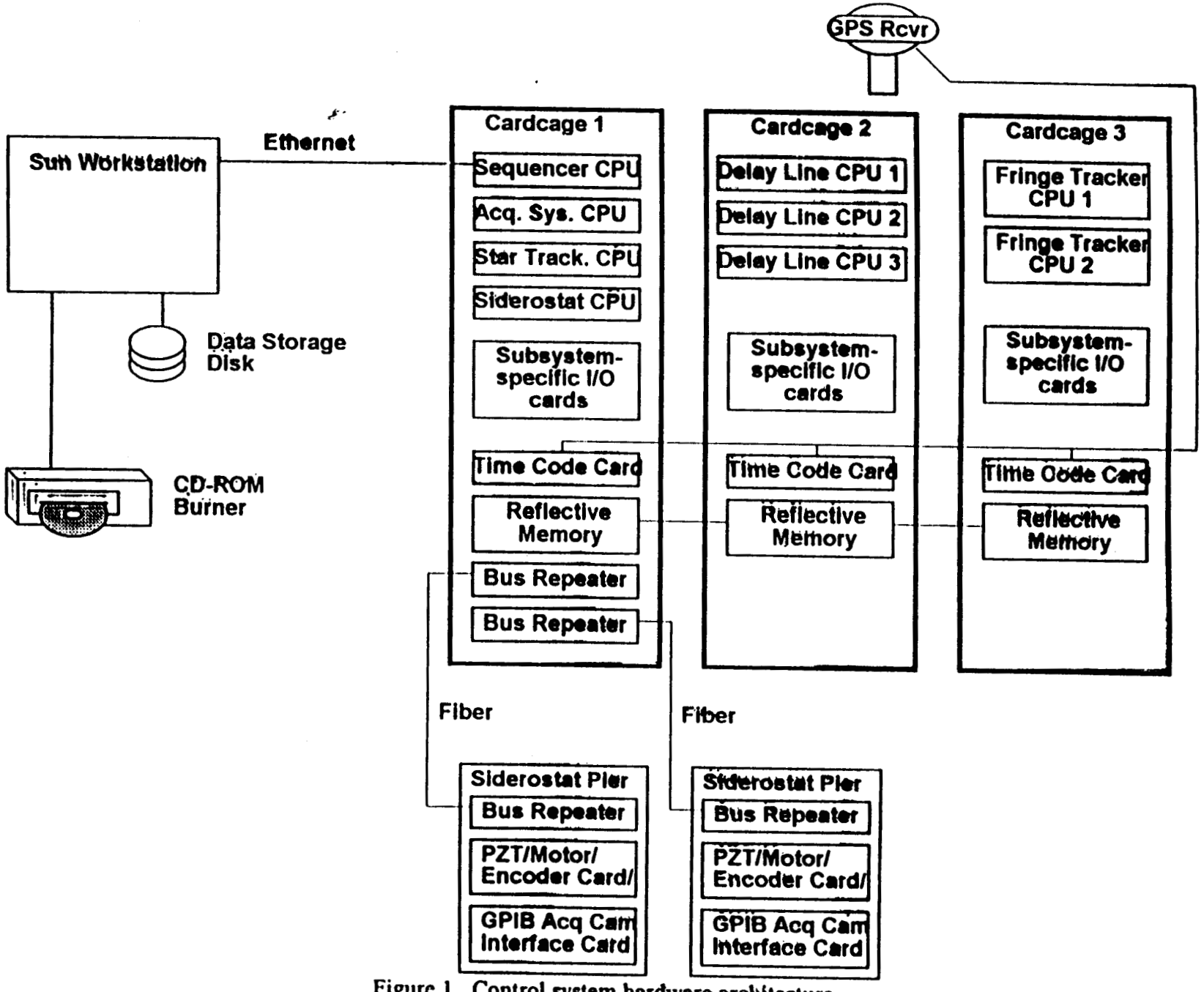

Figure 1. Control system hardware architecture

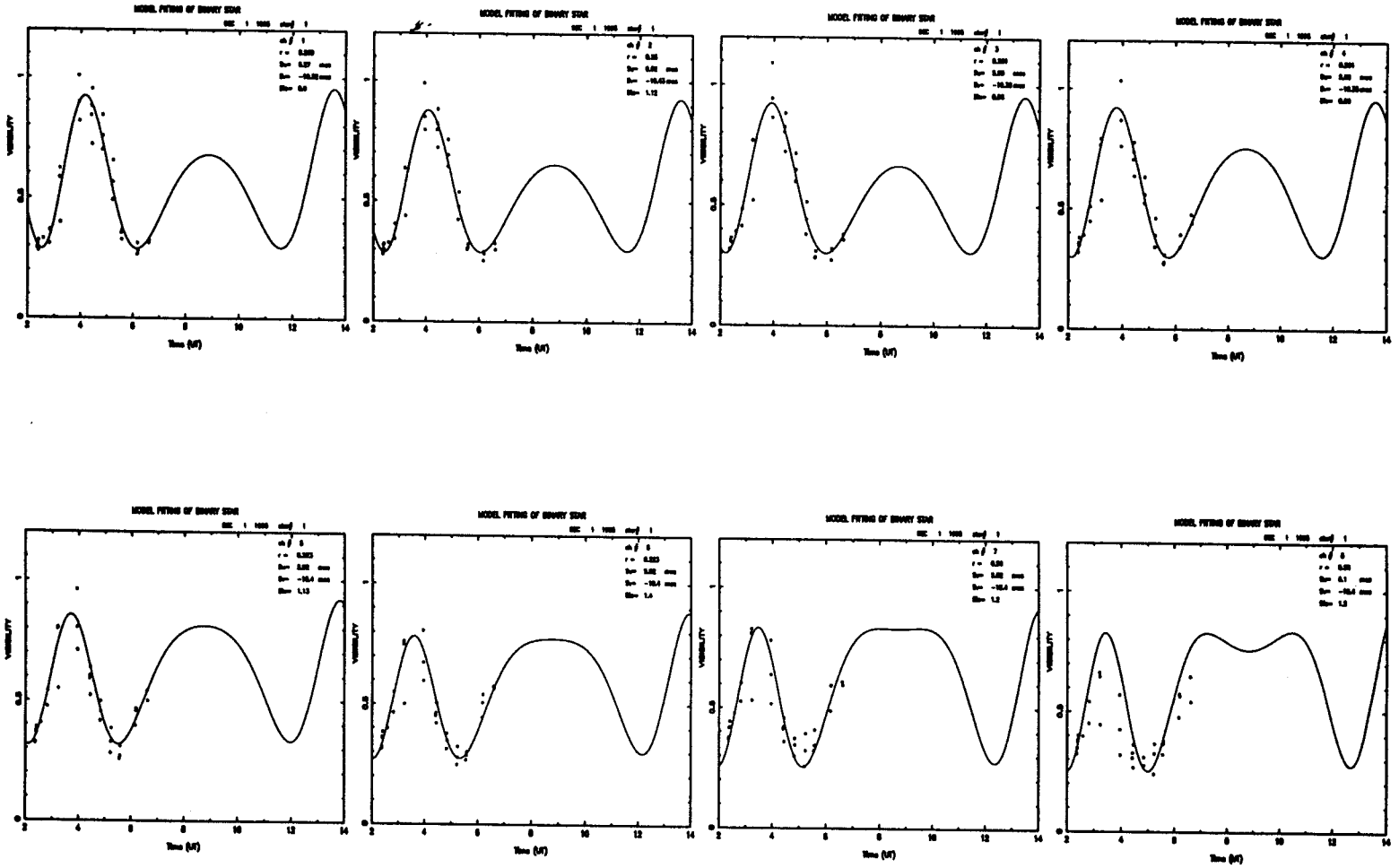
MODEL FITTING OF BINARY STAR
VISIBILITY
Time (UT)

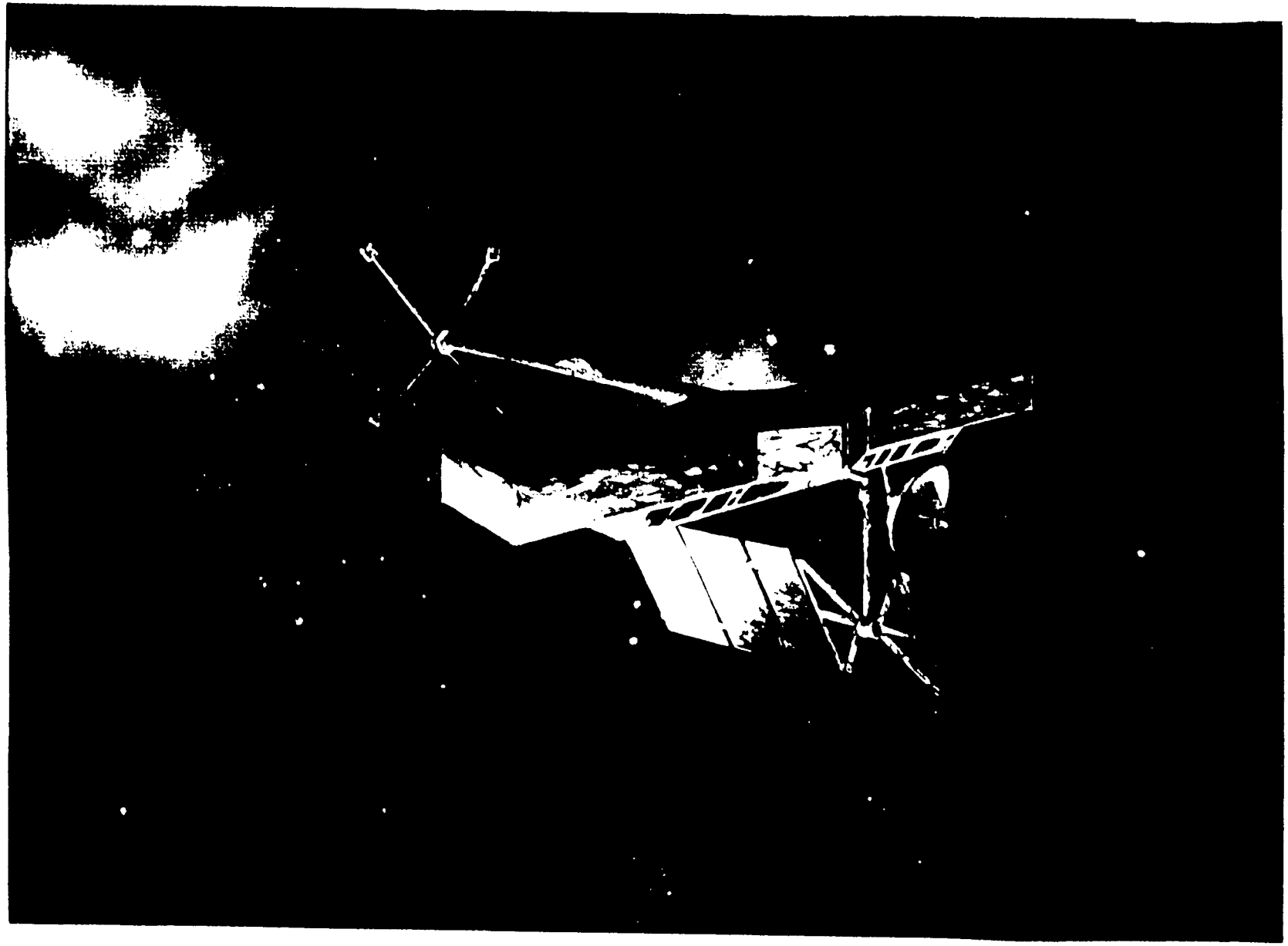

Backpacker SIM Classic Configuration

SIM

Space
Interferometry
Mission

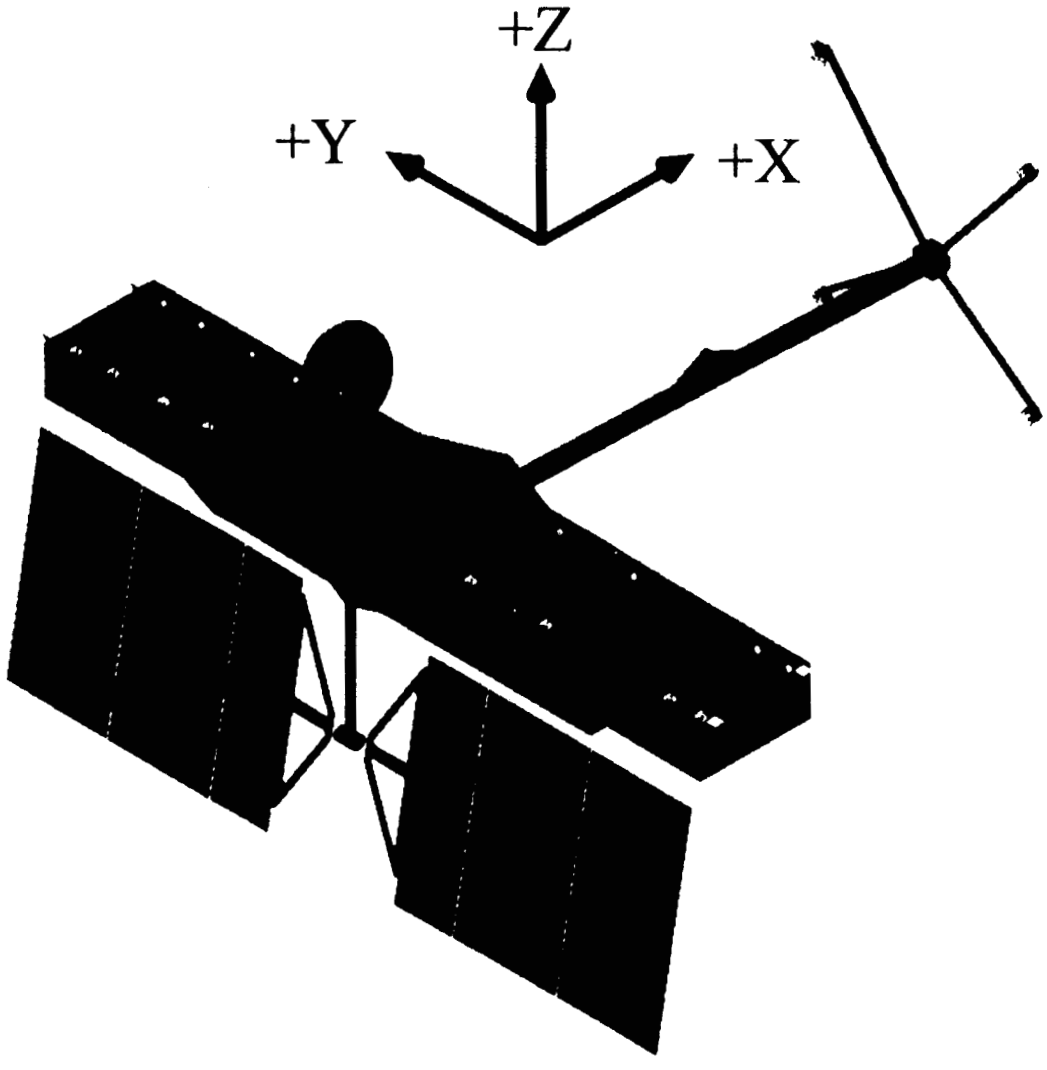

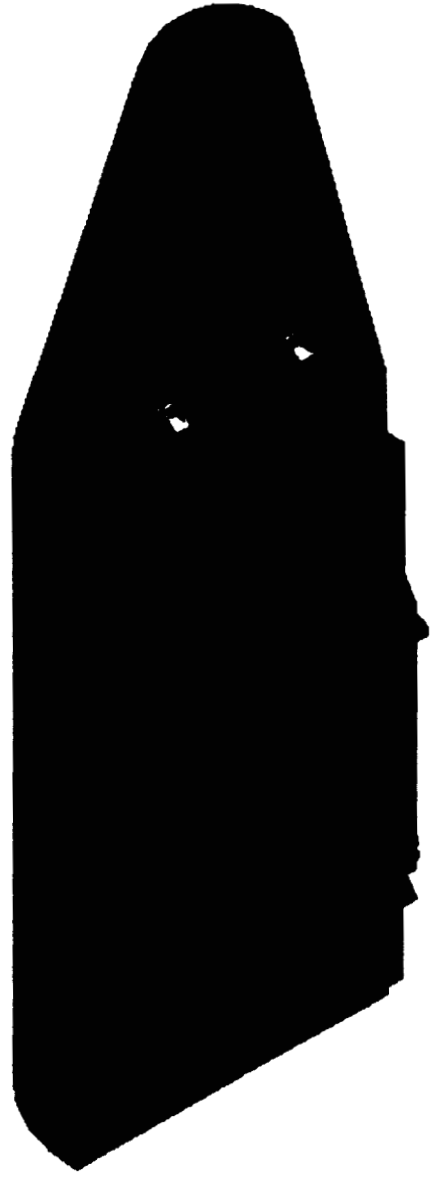

SIM Classic Configuration

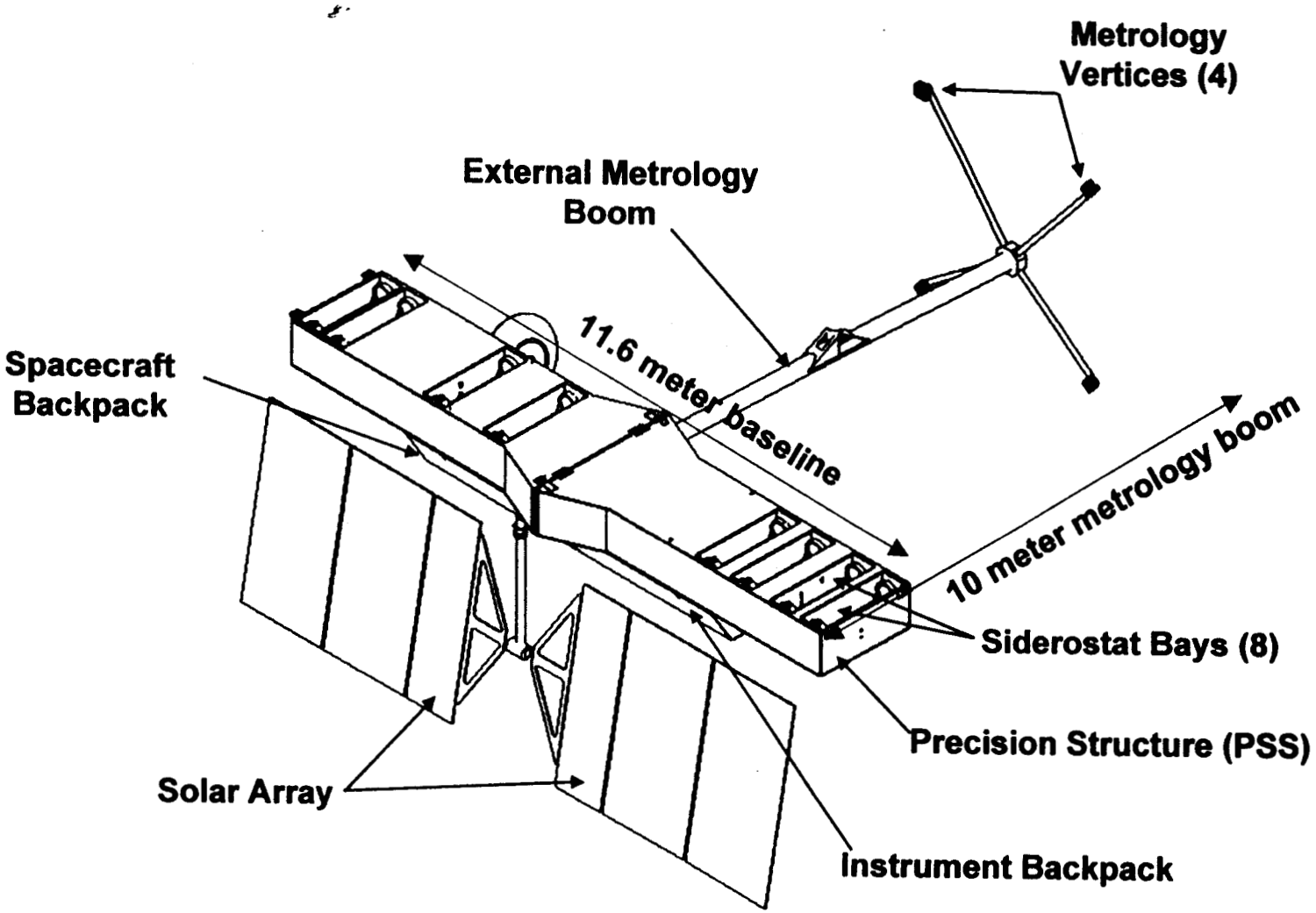

SIM

Space Interferometry Mission

SIM Instrument & Mission Parameters

Baseline	10 m
Wavelength	0.4 - 0.9 μm
Aperture	0.3 m
Field of Regard	15 °
Narrow-angle FOV	1 °
Imaging FOV	1."4
Orbit	Heliocentric Earth-trailing
Mission life	5 years (launch 2006)
Sensitivity	20 mag
Wide-angle Accuracy	4 μas
Narrow-angle Accuracy	1 μas
Imaging Resolution	10 mas
Interferometric nulling	Null depth 10

Recent stellar diameter results with the Mark III

Name	θ_{UD} (mas) 800 nm		θ_{UD} (mas) 450 nm		θ_{LD} (mas)
δ And	3.927	±0.038	3.638	±0.040	4.12
α Cas	5.297	±0.053	4.918	±0.051	5.64
β And	12.783	±0.128	11.535	±0.159	13.81
γ^1 And	7.328	±0.073	6.572	±0.097	7.84
α Ari	6.412	±0.064	5.855	±0.068	6.85
α Cet	12.254	±0.158	11.325	±0.285	13.23
α Tau	19.689	±0.196	18.467	±0.540	21.21
α Ori	49.401	±0.237			
α CMi	5.261	±0.053	5.139	±0.051	5.51
β Gem	7.545	±0.075	7.129	±0.071	8.04
ϵ Cyg	4.340	±0.037			4.62
β Peg	16.618	±0.059	15.996	±0.200	17.98

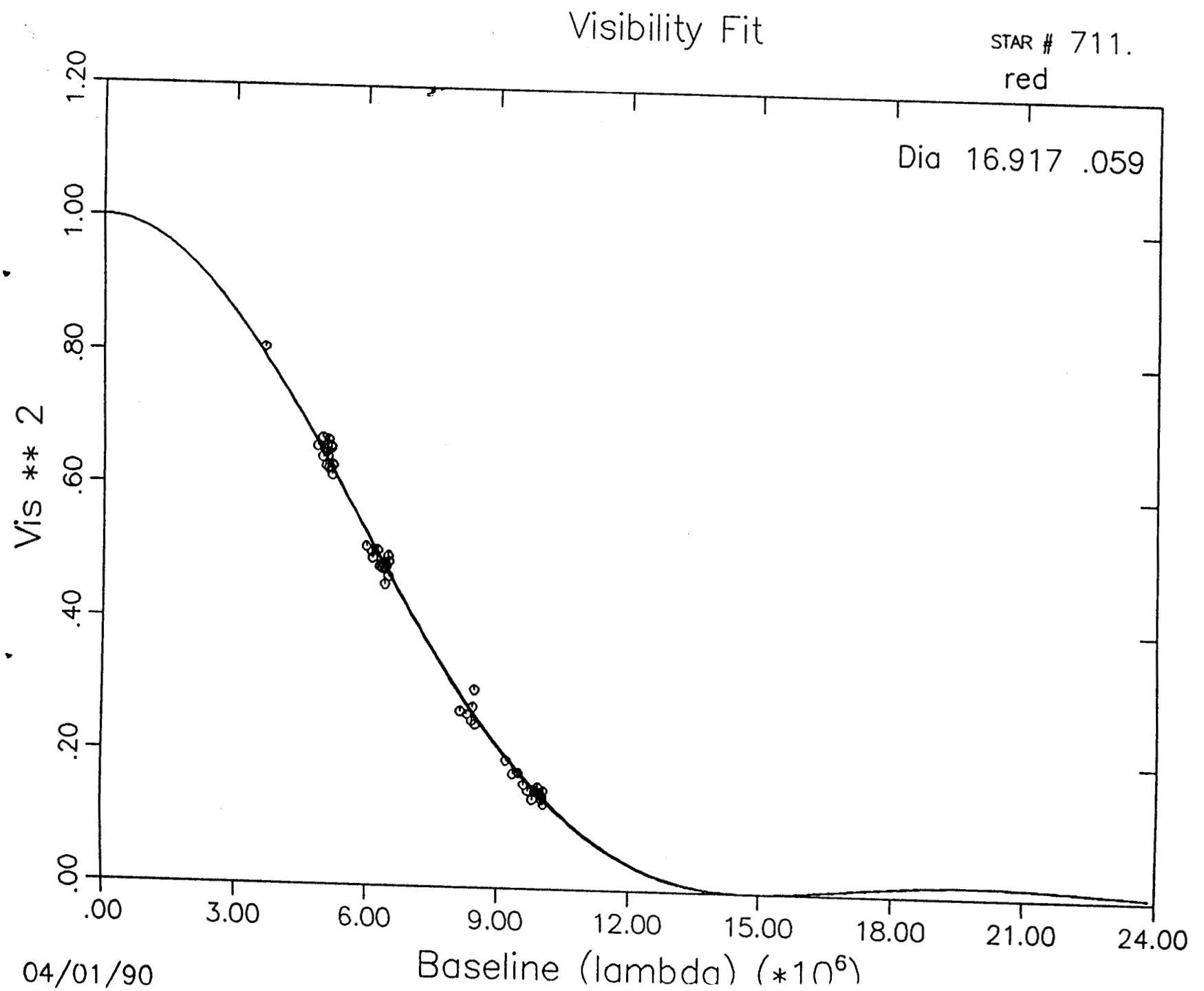
Visibility Fit
STAR # 711.
red
Dia 16.917 .059
Vis ** 2
1.20
1.00
.80
.60
.40
.20
.00
.00
3.00
6.00
9.00
12.00
15.00
18.00
21.00
24.00
Baseline (lambda) (*10^6)
04/01/90

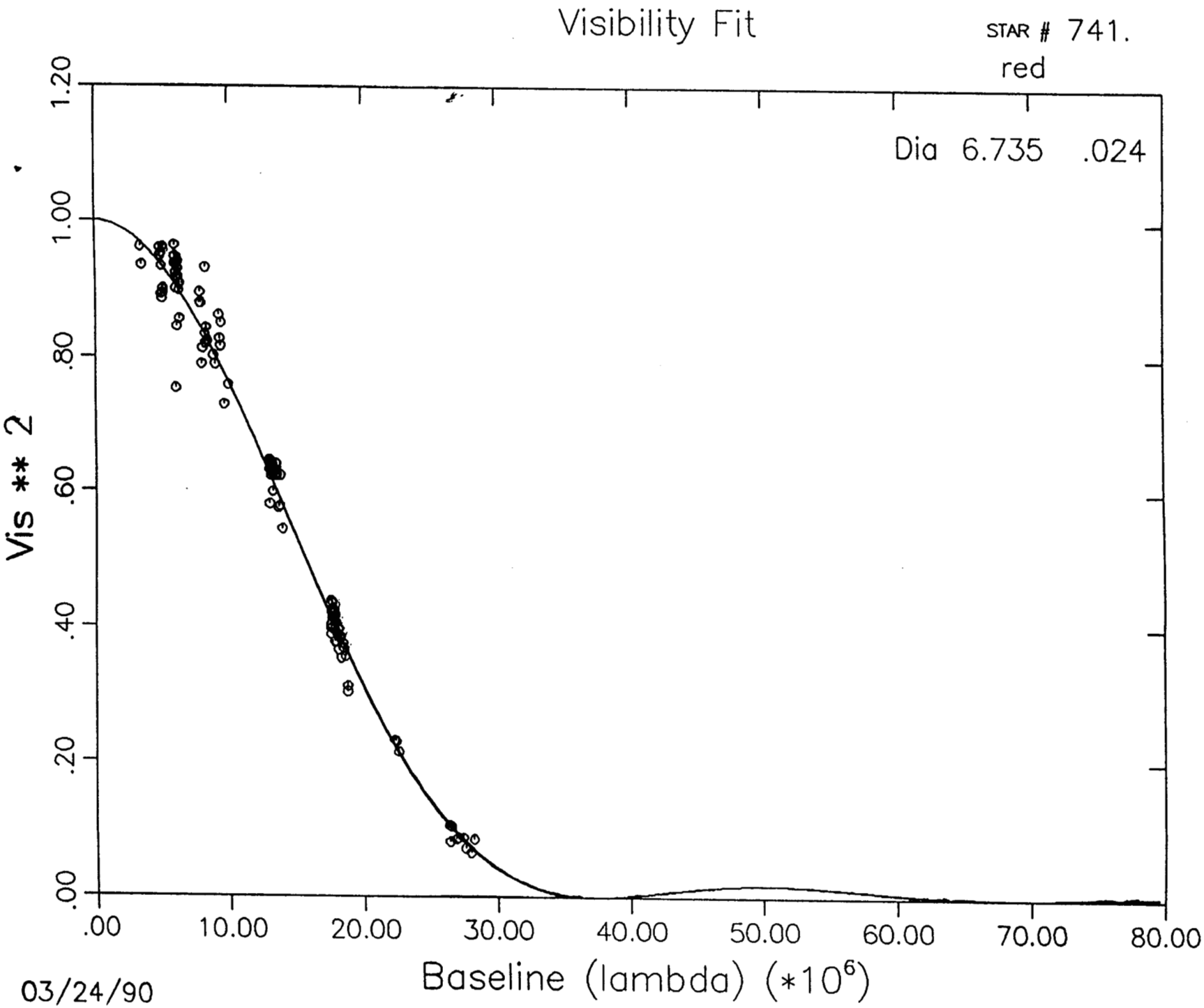
Visibility Fit
STAR # 741.
red
Dia 6.735 .024
Vis ** 2
1.20
1.00
.80
.60
.40
.20
.00
.00
10.00
20.00
30.00
40.00
50.00
60.00
70.00
80.00
Baseline (lambda) (*10^6)
03/24/90

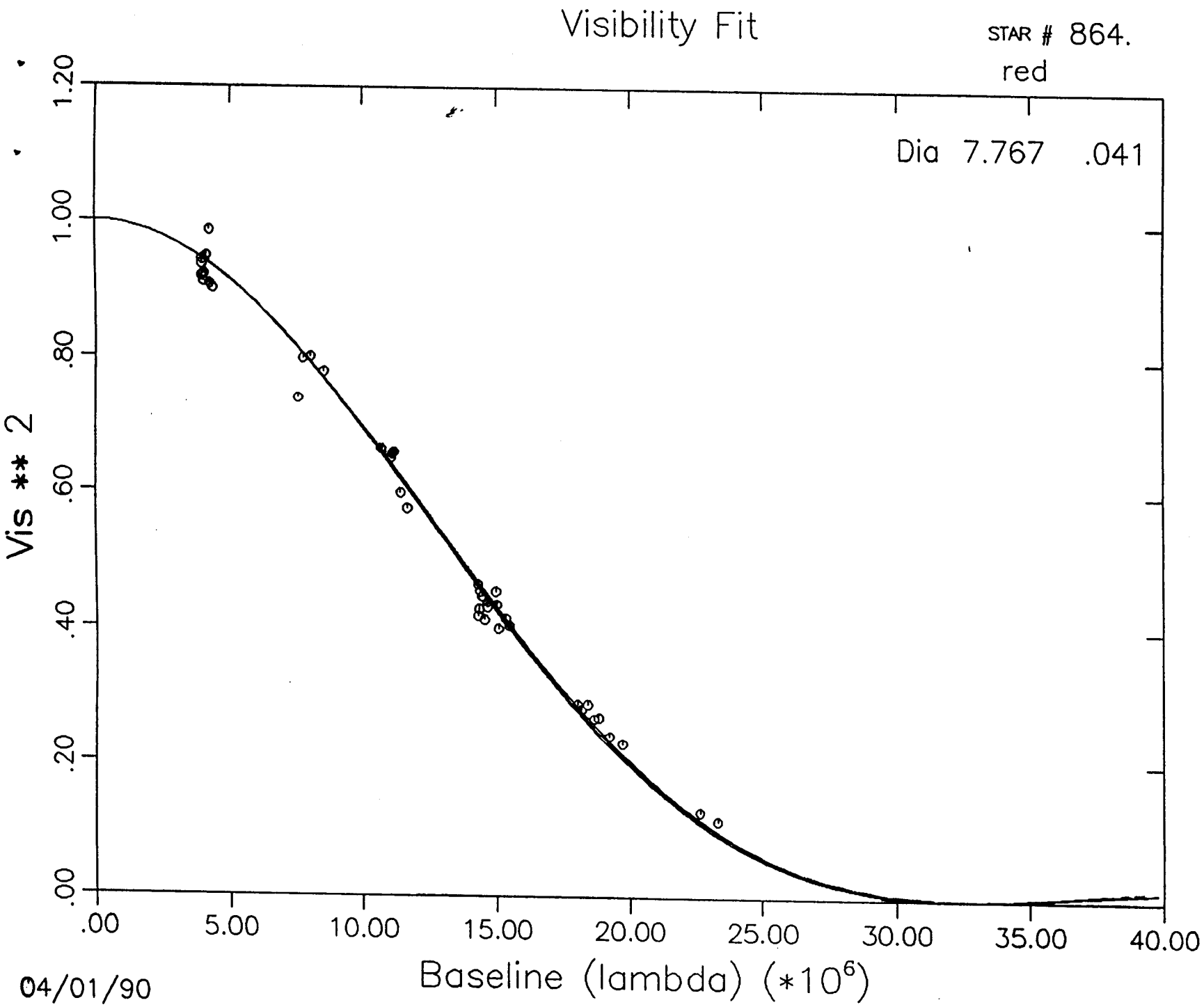
Visibility Fit
STAR # 864.
red
Dia 7.767 .041
Vis ** 2
1.20
1.00
.80
.60
.40
.20
.00
.00
5.00
10.00
15.00
20.00
25.00
30.00
35.00
40.00
Baseline (lambda) (*10^6)
04/01/90

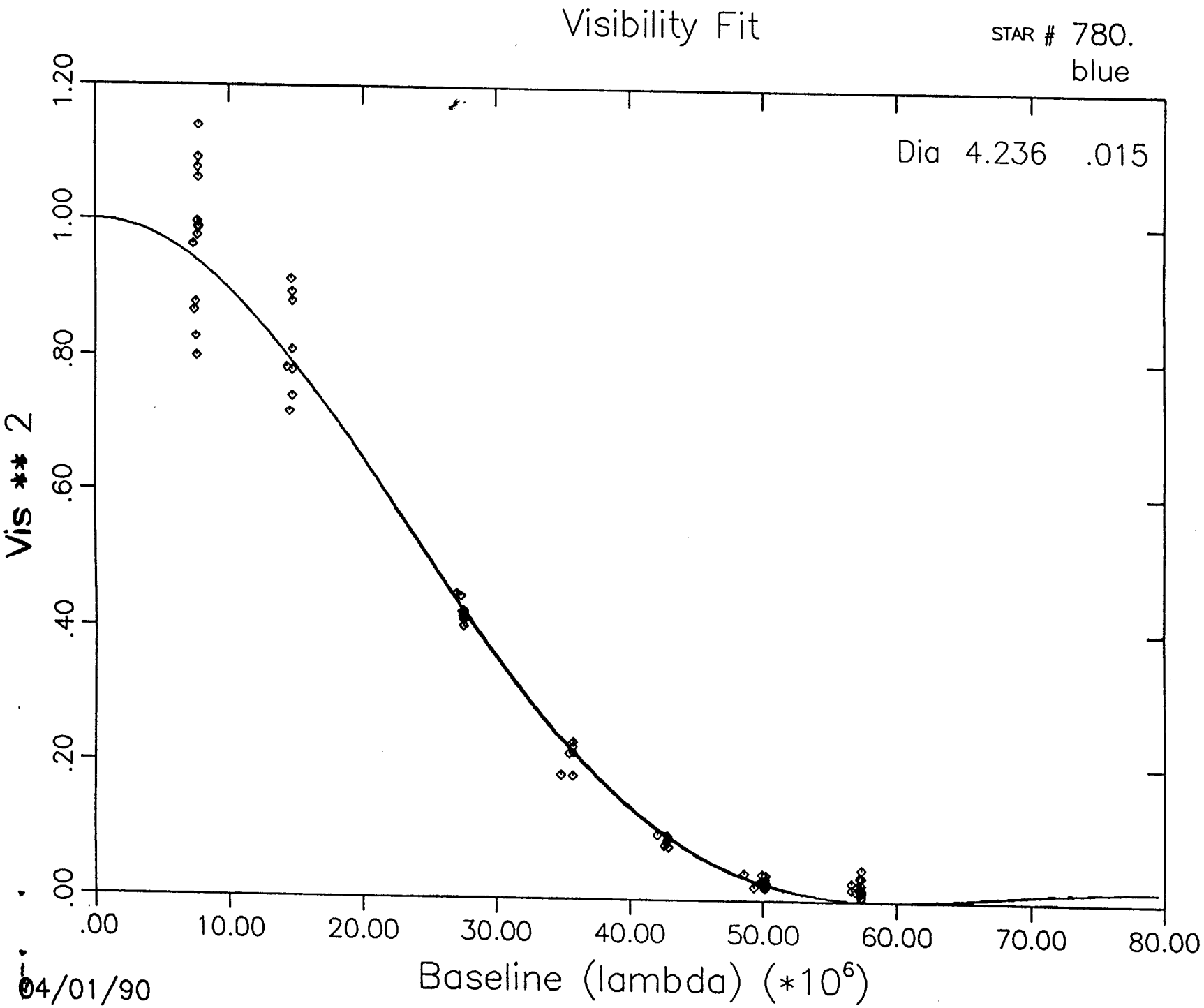
Visibility Fit
STAR # 780.
blue
Dia 4.236 .015
Vis ** 2
1.20
1.00
.80
.60
.40
.20
.00
.00
10.00
20.00
30.00
40.00
50.00
60.00
70.00
80.00
Baseline (lambda) (*10^6)
04/01/90

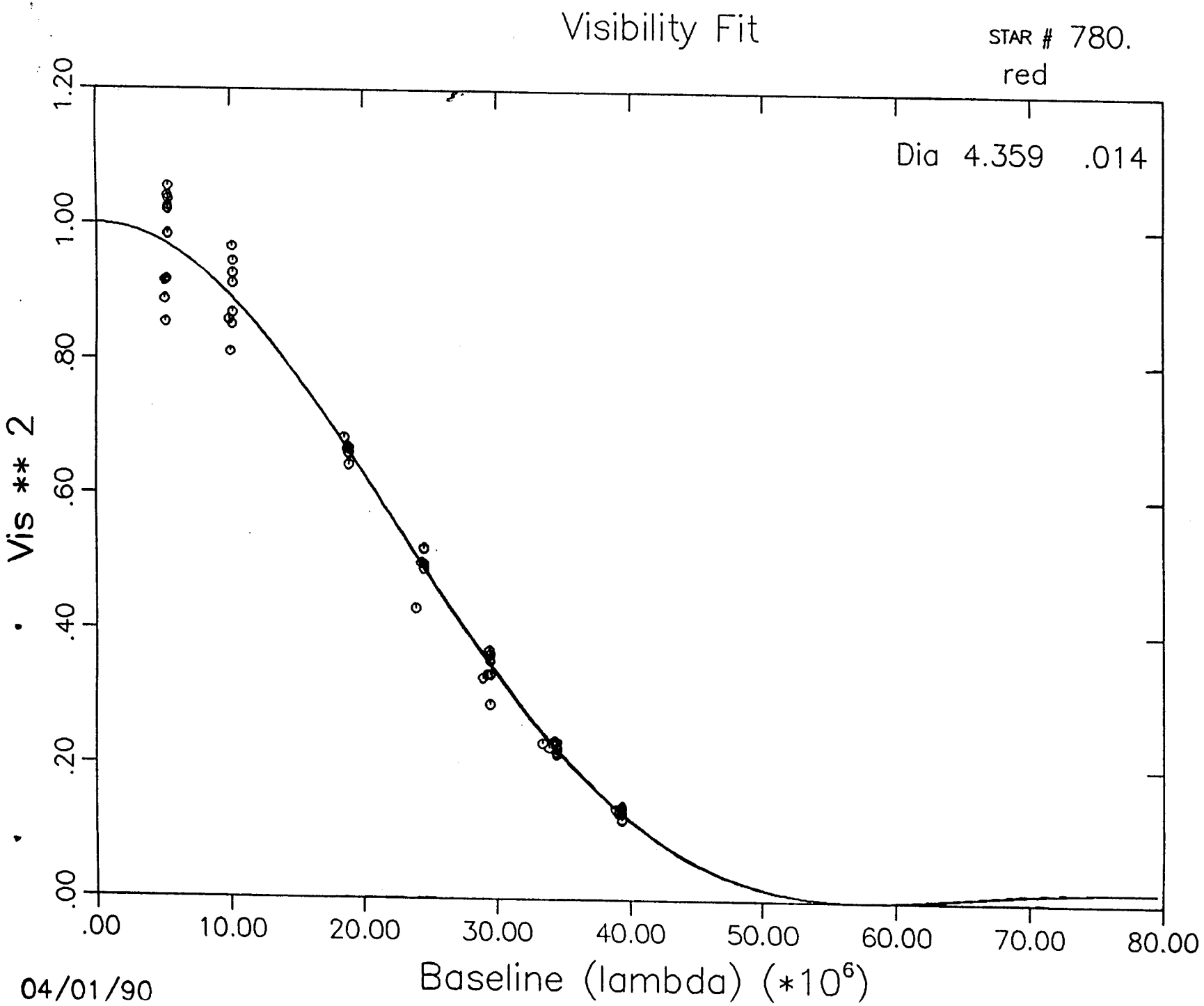
Visibility Fit
STAR # 780.
red
Dia 4.359 .014
Vis ** 2
1.20
1.00
.80
.60
.40
.20
.00
.00
10.00
20.00
30.00
40.00
50.00
60.00
70.00
80.00
Baseline (lambda) (*10^6)
04/01/90

Table 2. Accurate Stellar Masses with the Mark III Interferometer

Star	Spectrum	a''(mas)	i°	K_1(km/s)	K_2(km/s)	$m_1(m_\odot)$	$m_2(m_\odot)$
HR5793	B9.5IV,G5	7.75± 0.13	88.3 ± 0.07	35.35 ± 0.50	99.00 ± 0.5	2.58 ± 0.04	0.92 ± 0.01
HR6927	F7V,K3V	122.5 ± 0.20	74.76 ± 0.05	17.87 ± 0.10	24.20 ± 0.20	1.08 ± 0.03	0.78 ± 0.01
HR7478	G8III,G8III	23.7 ± 0.40	78.37 ± 0.40	26.79 ± 0.05	27.88 ± 0.05	2.26 ± 0.05	2.17 ± 0.05

Table 3. Comparison of Magnitude Differences measured with the Mark III Interferometer and Spectrophotometry

Star	Mark III		Spectrophotometry
	at 800 nm	at 550 nm	at 550 nm
HR 15	$1.^m82 \pm 0.^m04$	$1.^m99 \pm 0.^m04$	$1.^m35$
HR 154	$0.^m97 \pm 0.^m10$	$0.^m92 \pm 0.^m10$	$3.^m17$
HR 271	$0.^m94 \pm 0.^m06$	$1.^m01 \pm 0.^m05$	$0.^m29$
HR 553	$2.^m63 \pm 0.^m22$	$3.^m30 \pm 0.^m30$	$2.^m80$
HR 622	$0.^m52 \pm 0.^m04$	$0.^m44 \pm 0.^m04$	$1.^m19$
HR 936	$2.^m63 \pm 0.^m09$	$2.^m92 \pm 0.^m15$	$2.^m60$
HR 6927	$2.^m02 \pm 0.^m06$	$2.^m44 \pm 0.^m17$	$1.^m99$
HR 8131	$1.^m23 \pm 0.^m03$	$0.^m47 \pm 0.^m06$	$0.^m60$

Visual Orbit of the AB-C System of Algol

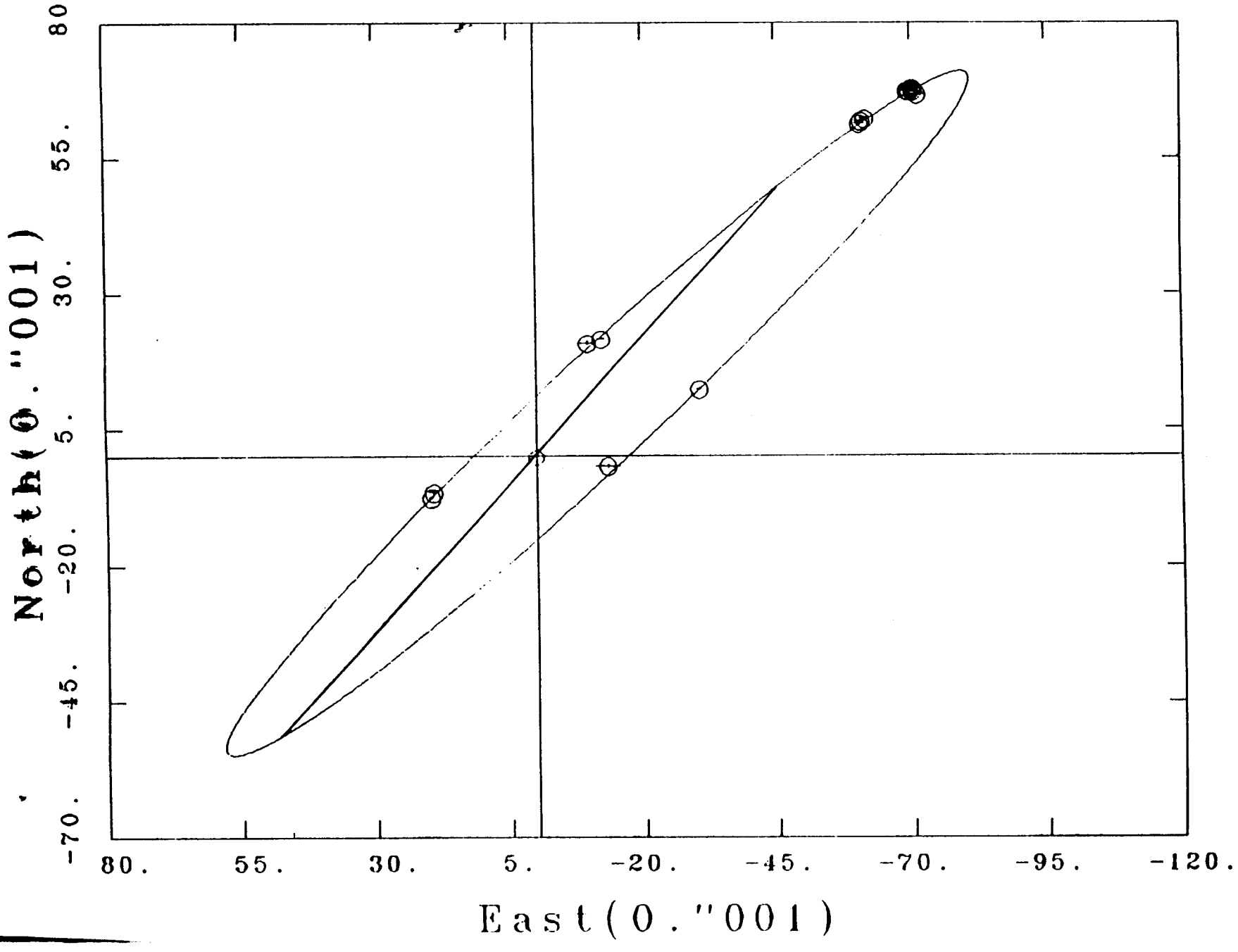

Mark III Long Baseline Interferometer

TABLE 2

GEOMETRIC AND PHYSICAL PARAMETERS OF THE AB-C SYSTEM OF ALGOL

Parameter	Value
P	$680^{d}.05 \pm 0^{d}.06$
T	JD 2,446,931.4 ± 1.5
e	0.225 ± 0.005
w	$310^{\circ}.29 \pm 0^{\circ}.08$
i	$83^{\circ}.98 \pm 0^{\circ}.09$
a''	94.61 ± 0.22 mas
Ω	$312^{\circ}.26 \pm 0^{\circ}.13$
a	2.67 ± 0.08 AU
d	28.2 ± 0.8 pc
M_C	2.86 ± 0.46 mag
$\mathcal{M}_{AB}$	3.98 ± 0.38 $\mathcal{M}_\odot$
$\mathcal{M}_C$	1.50 ± 0.11 $\mathcal{M}_\odot$

while the inclination of the short-period pair A-B is $82^{\circ}.42 \pm 0^{\circ}.04$ (Tomkin & Lambert 1978). The small difference of the inclinations, i.e., $1^{\circ}.56 \pm 0^{\circ}.10$, means a possibility of the coplanarity between the A-B system and the AB-C system, as implied by dynamical arguments (Soderhjelm 1980). However, an analysis of eclipse polarization (Kemp et al. 1983) concludes that the two orbits are perpendicular to within about 10°. Hopefully, a future measurement of Ω for the A-B system will resolve this discrepancy. The visual orbit of the AB-C system of Algol and the measured data are displayed in Figure 2; the calculated separations [$S_r(C)$ and $S_\theta(C)$] and the residuals for this orbit are also entered in Table 1 (note that these values are for the equinox of the observation epoch). The rms residuals between the measured and the calculated separations are 0.5 [illegible] the residuals for the speckle data are 5.6

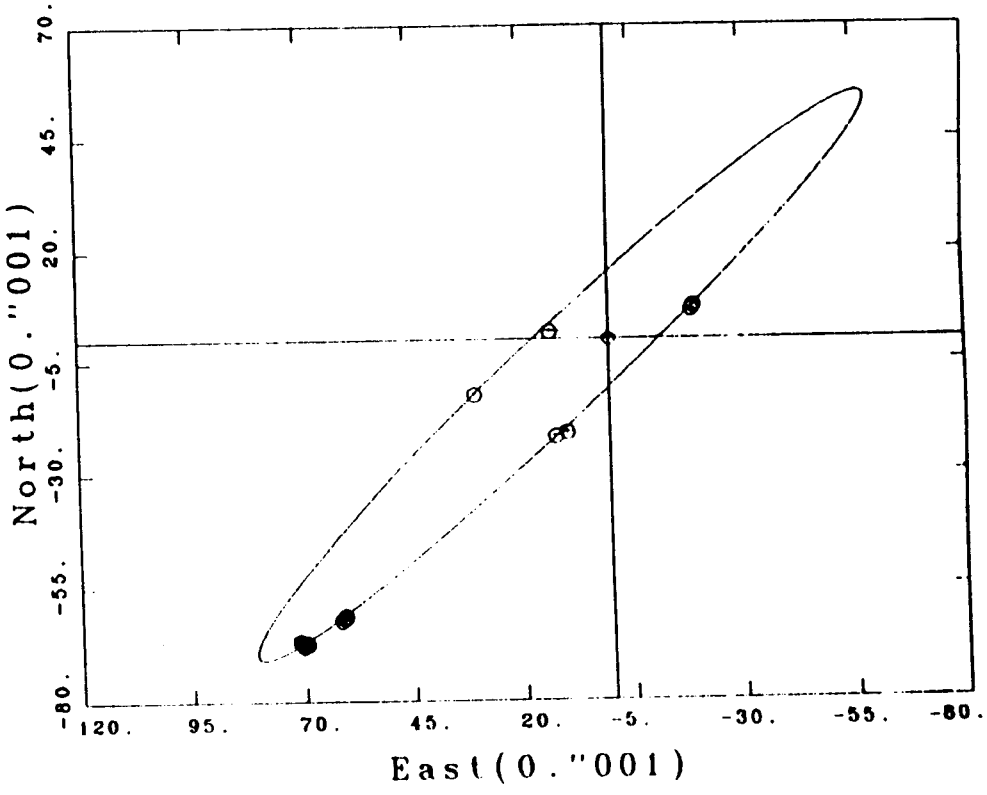

FIG. 2.—Apparent orbit of the AB-C system of Algol and measured data at 800 nm. The individual measurements, which are at the centers of the open circles, are connected to the calculated positions by a short line. The formal errors (1 σ) in R.A. and decl. are indicated by the lengths of crosses centered on the points.

mag at 550 nm. Given the apparent visual magnitude m_V = 2.12 mag, the visual magnitude of the C component is 5.11 ± 0.46 mag, and the absolute magnitude M_C is 2.86 ± 0.46 mag. Using the multicolor photometric results for Algol (Johnson et al. 1966), the estimated value of V − 800 nm is 0.03 ± 0.01 mag. Thus, the magnitude of the C component at 800 nm is estimated as 4.81 + 0.25 mag, and its color index

Visual Orbit of the AB-C System of Algol

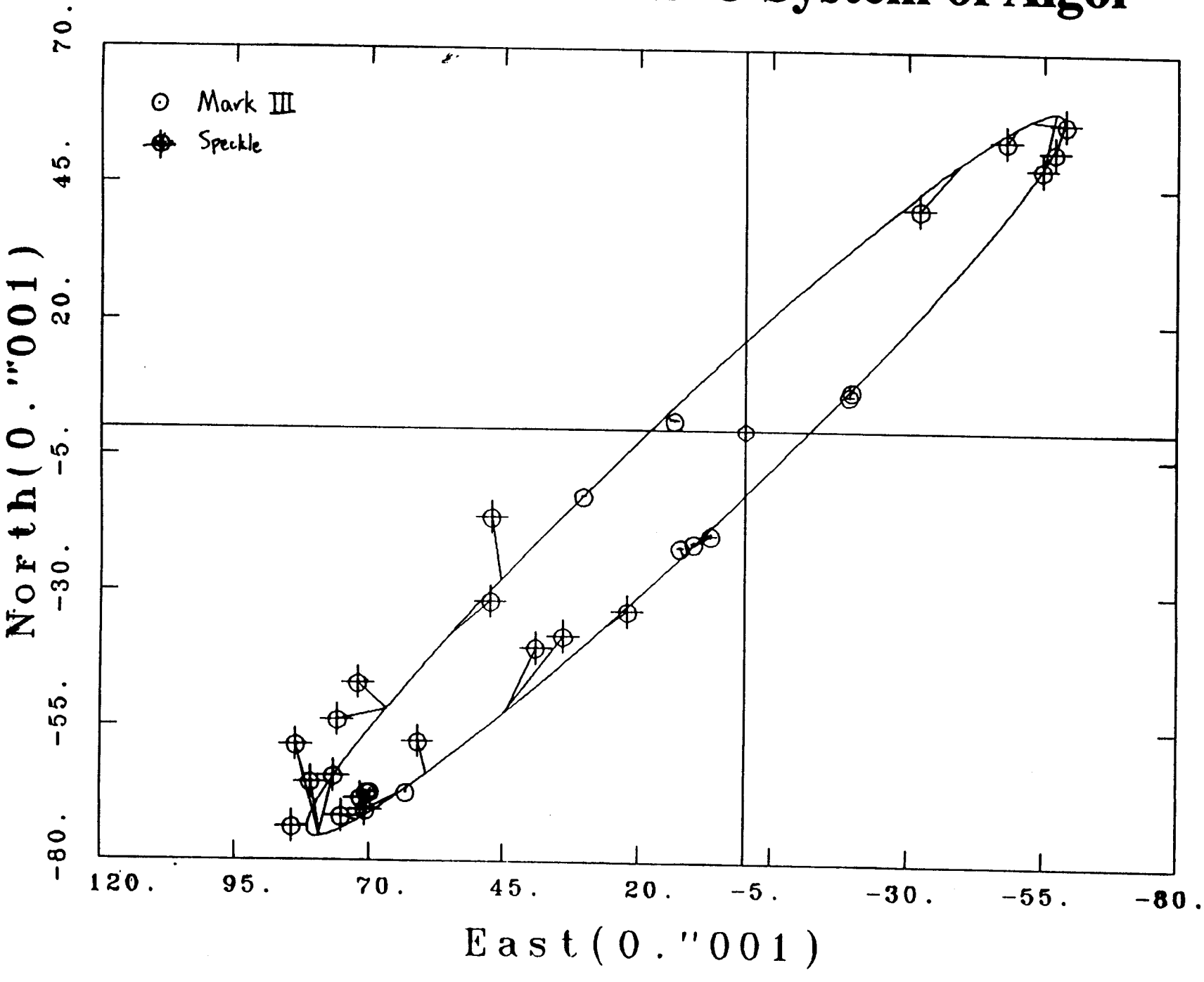

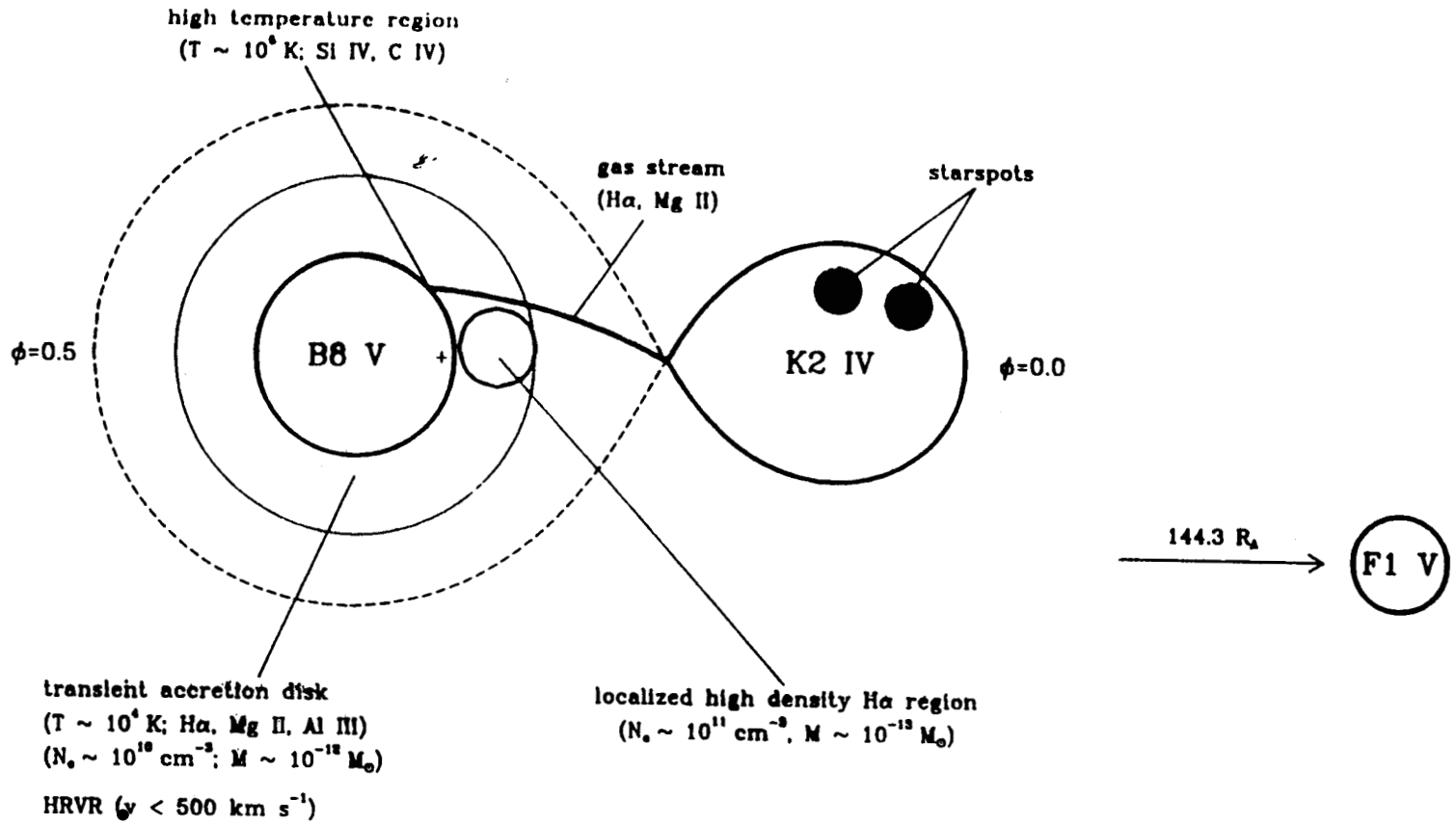

T_A = 13000 ± 500 K	$1''_{AB}$ = 2.3 mas	T_B = 4500 ± 300 K	a''_{AB-C} = 74.6 mas	T_C = 7000 ± 200 K
M_A = 3.7 ± 0.3 $M_\odot$	a_{AB} = 0.065 au	M_B = 0.81 ± 0.05 $M_\odot$	a_{AB-C} = 2.67 au	M_C = 1.6 ± 0.1 $M_\odot$
R_A = 2.90 ± 0.04 $R_\odot$	θ''_A = 0.50 mas	R_B = 3.5 ± 0.1 $R_\odot$	θ''_B = 0.52 mas	R_C = 1.4 ± 0.1 $R_\odot$

FIG. 8.—Model for Algol in the orbital plane of the binary derived from the results of this paper, the ultraviolet spectral studies of Cugier & Molaro (1984) and Brandi et al. (1989), the Hα line profile analysis of Richards, Bolton, & Mochnacki (1989, 1990), and the infrared light curve results of Richards (1990a, b). The circumstellar material is concentrated in several regions which exist within a transient accretion disk around the primary star which extends above (and below) the orbital plane to cover the visible disk of the star. The observed locations of the components of the circumstellar material, the predicted position of the gas stream (Lubow & Shu 1975, 1976), and the center of mass of the binary (*plus sign*) are shown. The transient disk has a radius of $1.8 R_A$ and the binary and tertiary are drawn to scale.

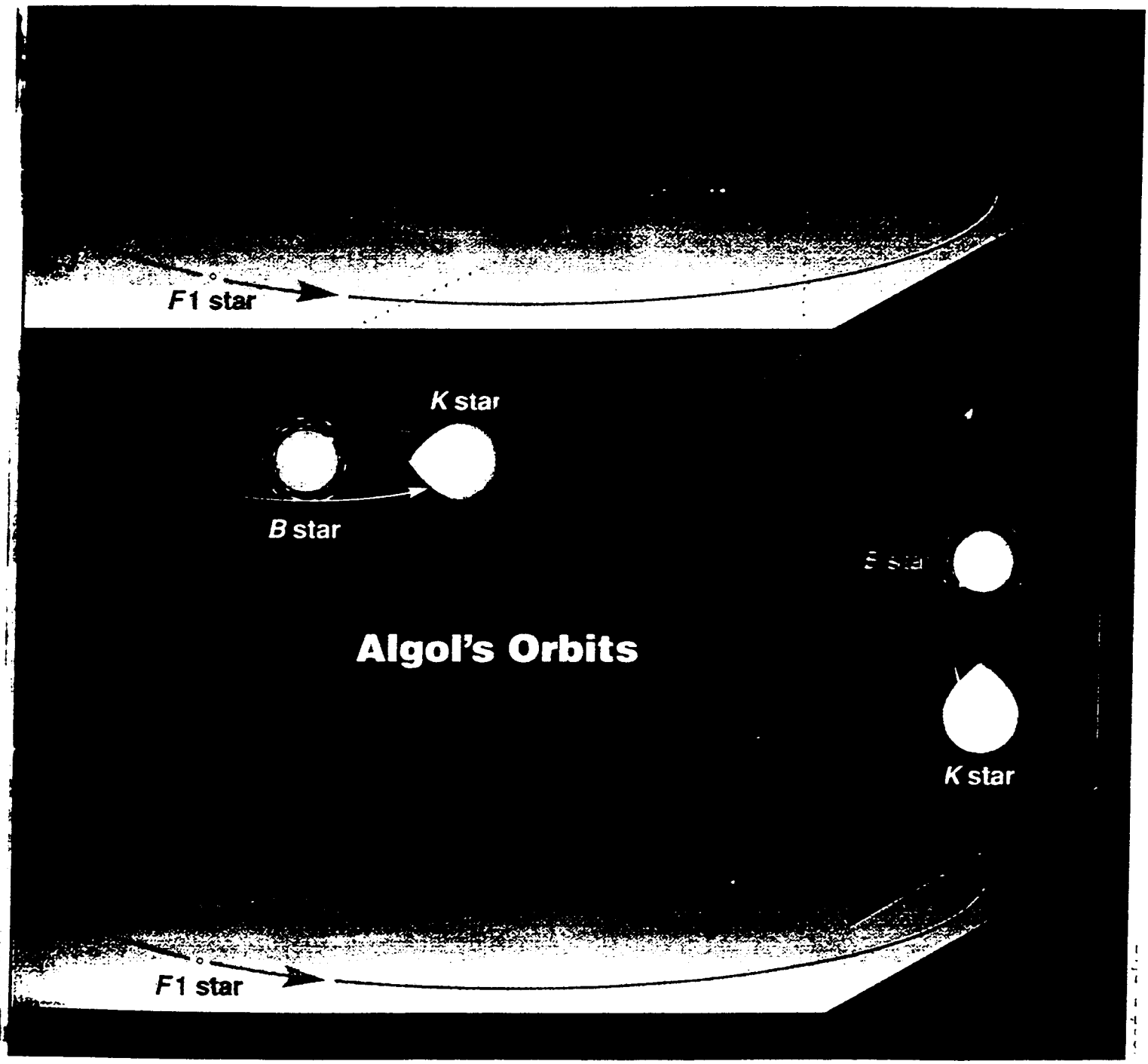

Which is the real Algol? Recent studies disagree about whether the close pair orbits in a **plane** perpendicular to the orbit plane of the distant companion (bottom) or in the same **plane** *(top)*. Adapted from the *Astrophysical Journal*.

Algol (β Per)

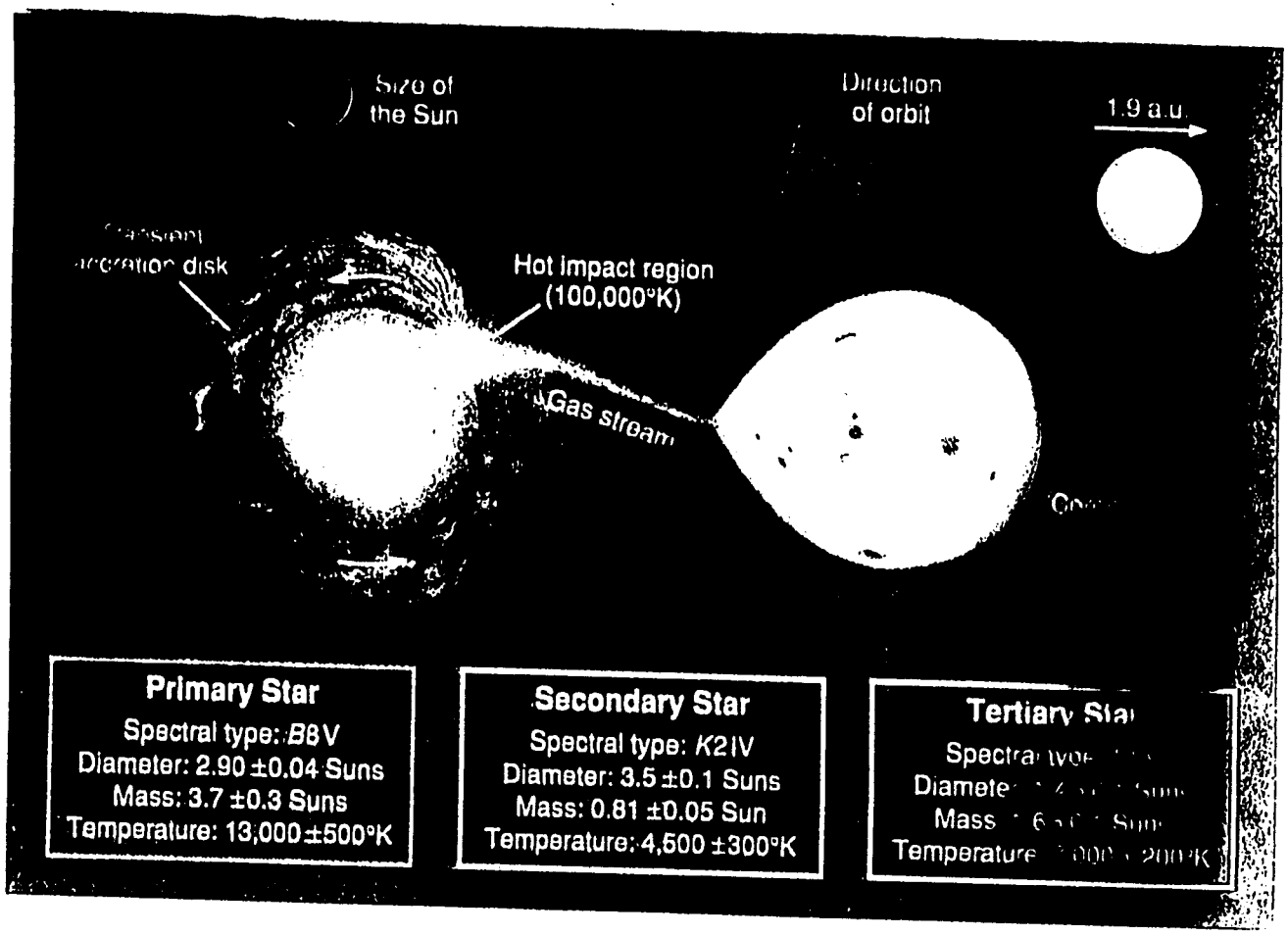
Size of the Sun
Direction of orbit
1.9 a.u.
Hot impact region (100,000°K)
Gas stream
Primary Star
Spectral type: B8V
Diameter: 2.90 ±0.04 Suns
Mass: 3.7 ±0.3 Suns
Temperature: 13,000 ±500°K
Secondary Star
Spectral type: K2IV
Diameter: 3.5 ±0.1 Suns
Mass: 0.81 ±0.05 Sun
Temperature: 4,500 ±300°K

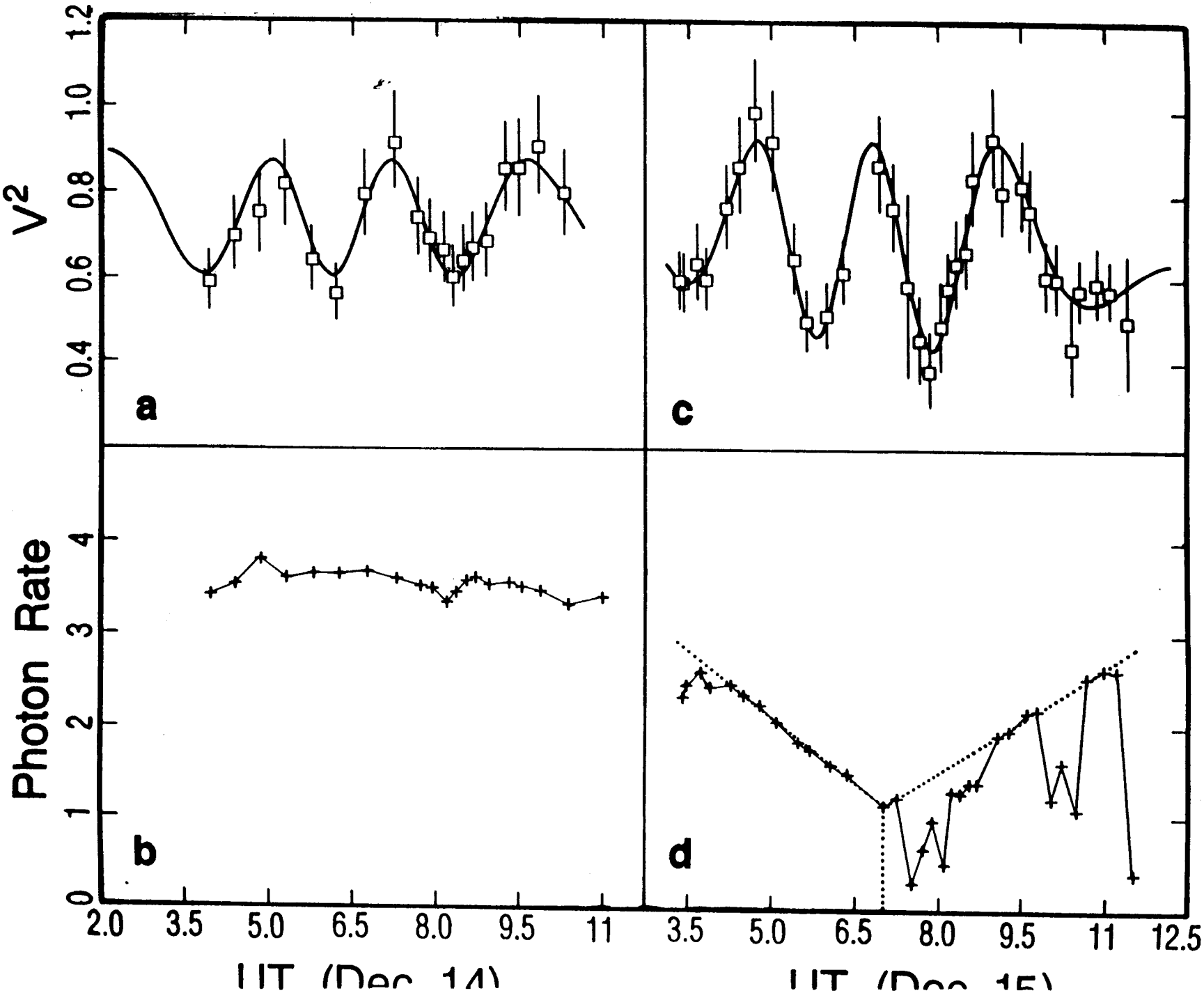
V²
1.2
1.0
0.8
0.6
0.4
a
c
Photon Rate
4
3
2
1
0
b
d
2.0
3.5
5.0
6.5
8.0
9.5
11
3.5
5.0
6.5
8.0
9.5
11
12.5

Table 1. Comparison of parameters determined with the Mark III, astrometry, speckle, and spectroscopy for χDra

	Mark III		Astrometry		Speckle		Spectroscopy Primary		Spectroscopy Secondary	
P(day)	280.54	±0.03	—		280.550		280.55		280.7	
T(year)	1984.8352	±0.0019	—		1984.8360		1984.8360		1984.8283	
e	0.416	±0.003	—		0.445		0.445	±0.005	0.415	±0.008
$a''(mas)$	122.5	±0.2	149	±10	122	±1	—		—	
i°	74.76	±0.05	56.0	±2.1	74.9	±0.9	—		—	
ω°	119.15	±0.09	—		119.2	±0.7	121.7	±1.0	292.2	±1.5
Ω°	230.48	±0.12	235.5	±2.5	231.5	±0.7	—		—	
d(pc)	8.33	±0.11	7.90	±0.34	8.33	±0.10				
Δm_{800}	2.02	±0.06	—		—		—		—	
Δm_{550}	2.44	±0.17	—		—		1.99			
M_{1bol}(mag)	4.04	±0.08	—		—		—			
M_{2bol}(mag)	6.14	±0.27	—		—		—			
$Color_1$	+0.54	±0.20	—		—		—			
$Color_2$	+0.96	±0.24	—		—		—			

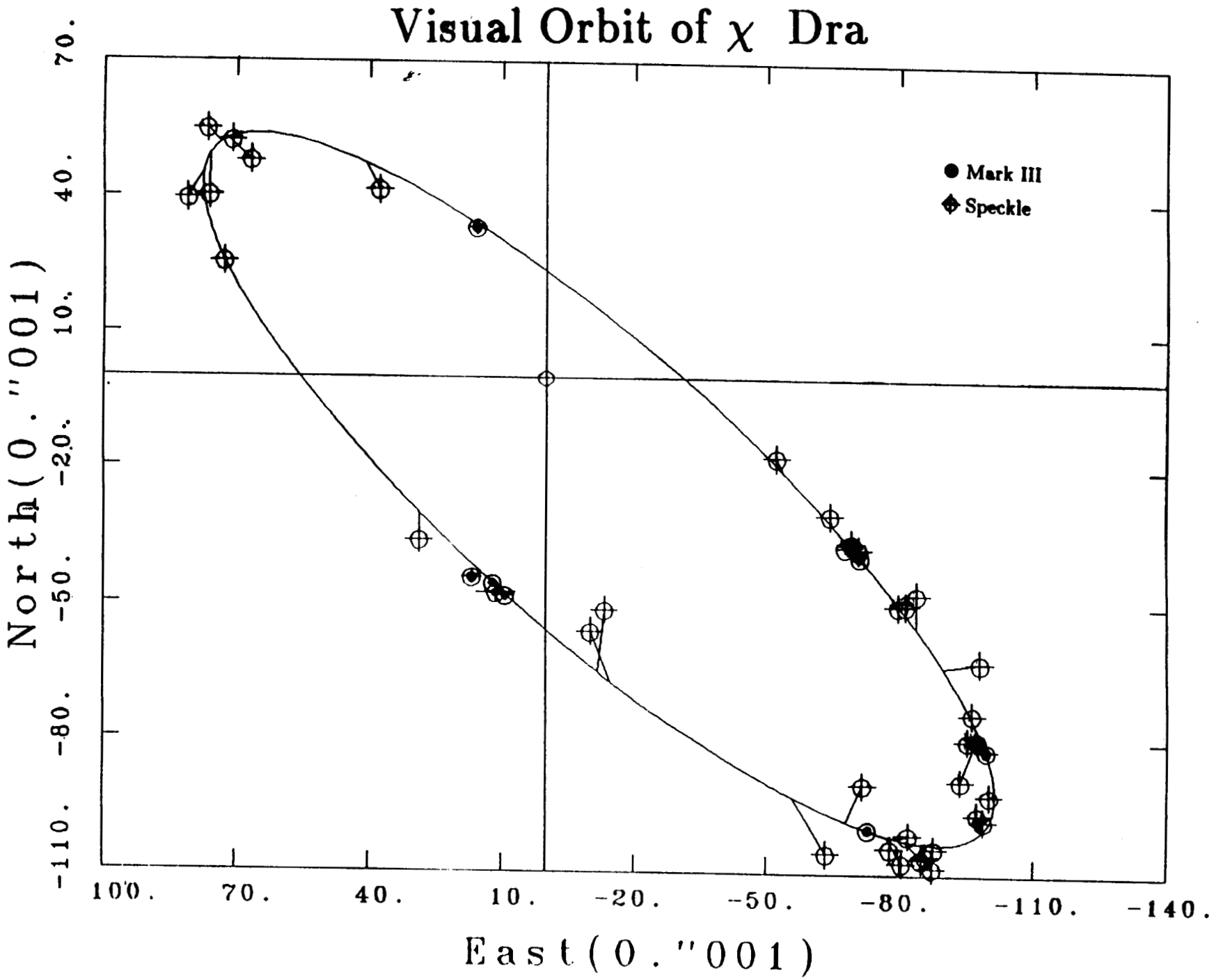
Visual Orbit of χ Dra
Mark III
Speckle
North(0."001)
East(0."001)
70.
40.
10.
-20.
-50.
-80.
-110.
100.
70.
40.
10.
-20.
-50.
-80.
-110.
-140.

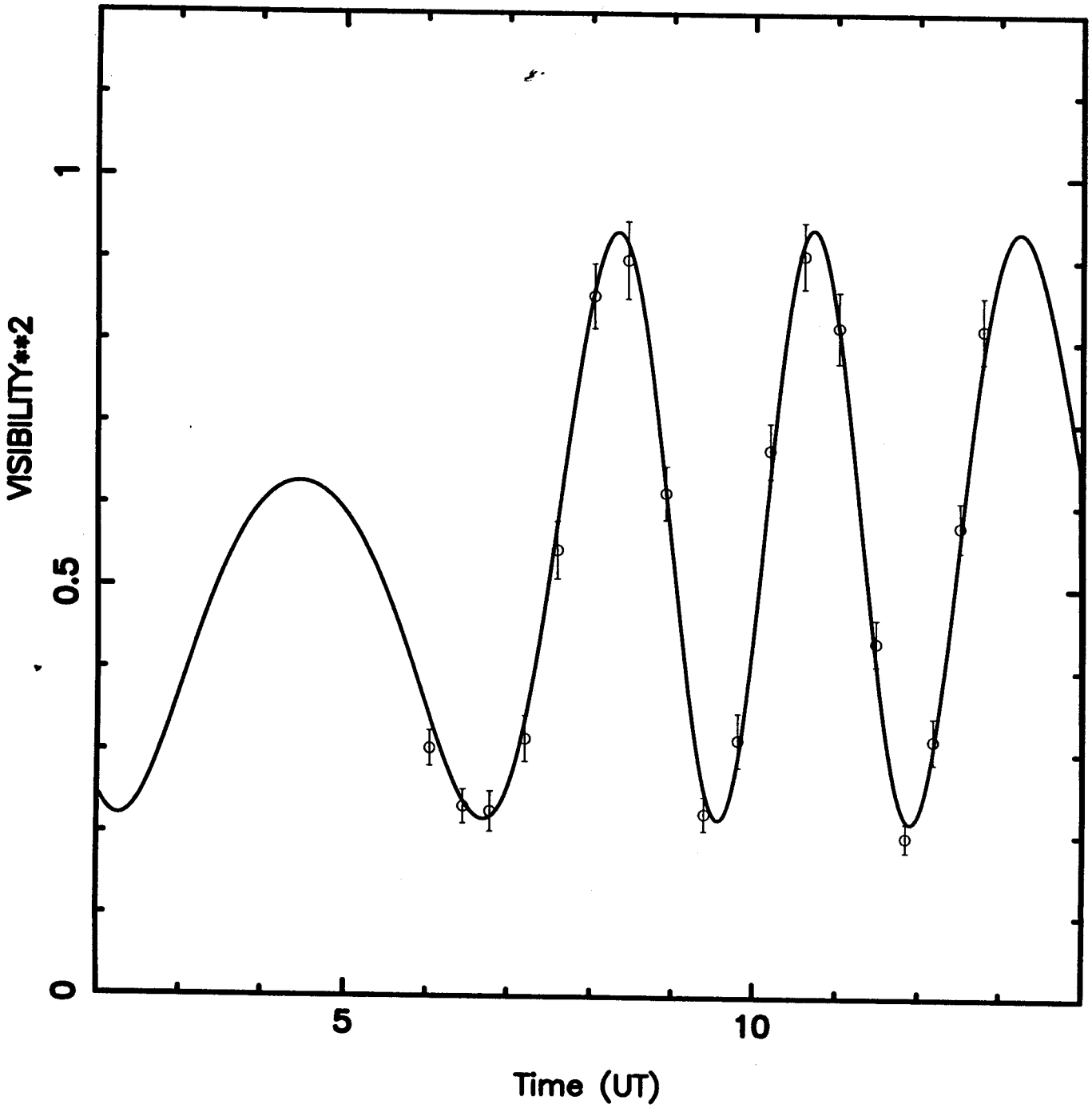
VISIBILITY**2
0
0.5
1
5
10
Time (UT)

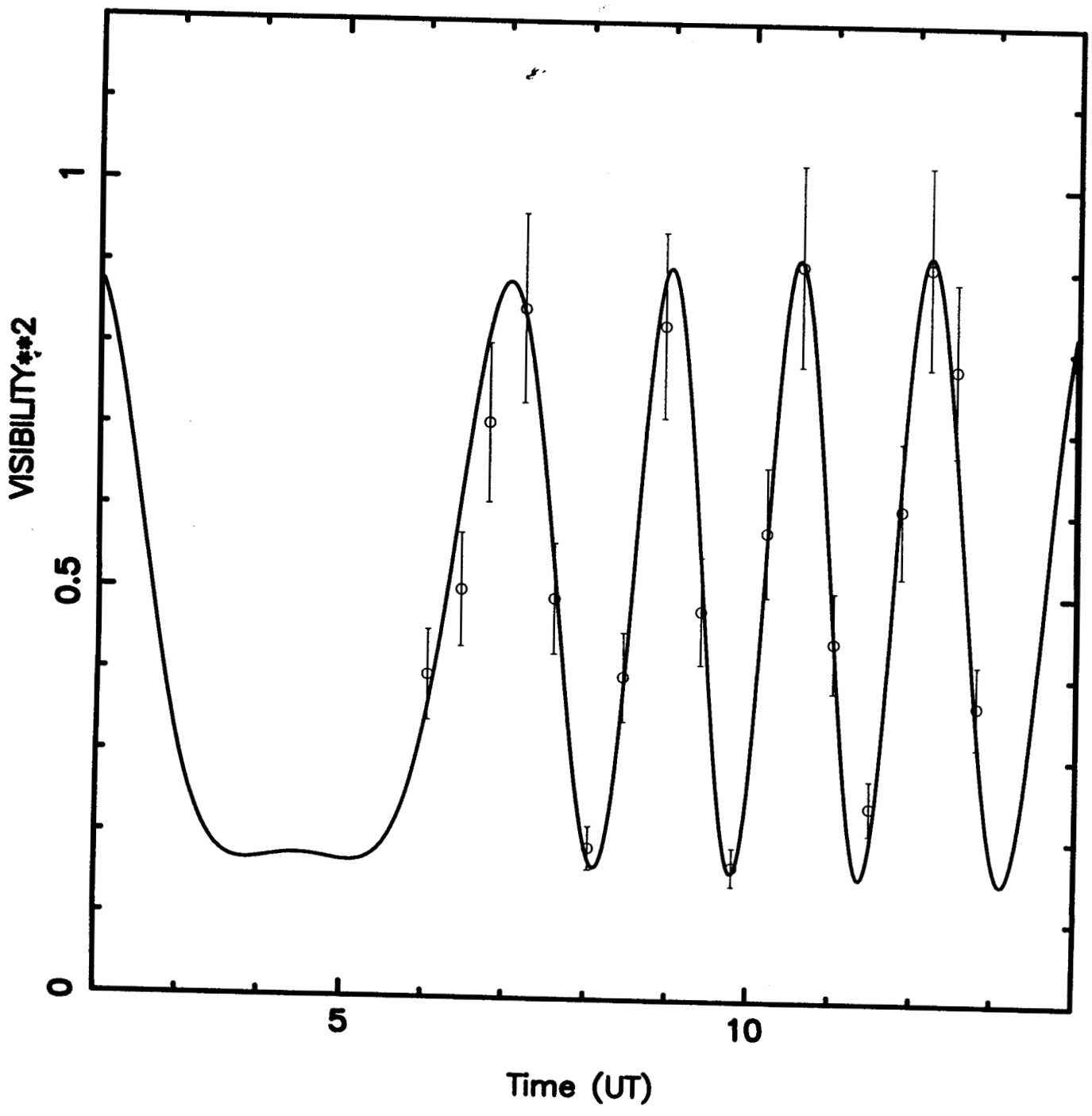
VISIBILITY**2
0
0.5
1
5
10
Time (UT)

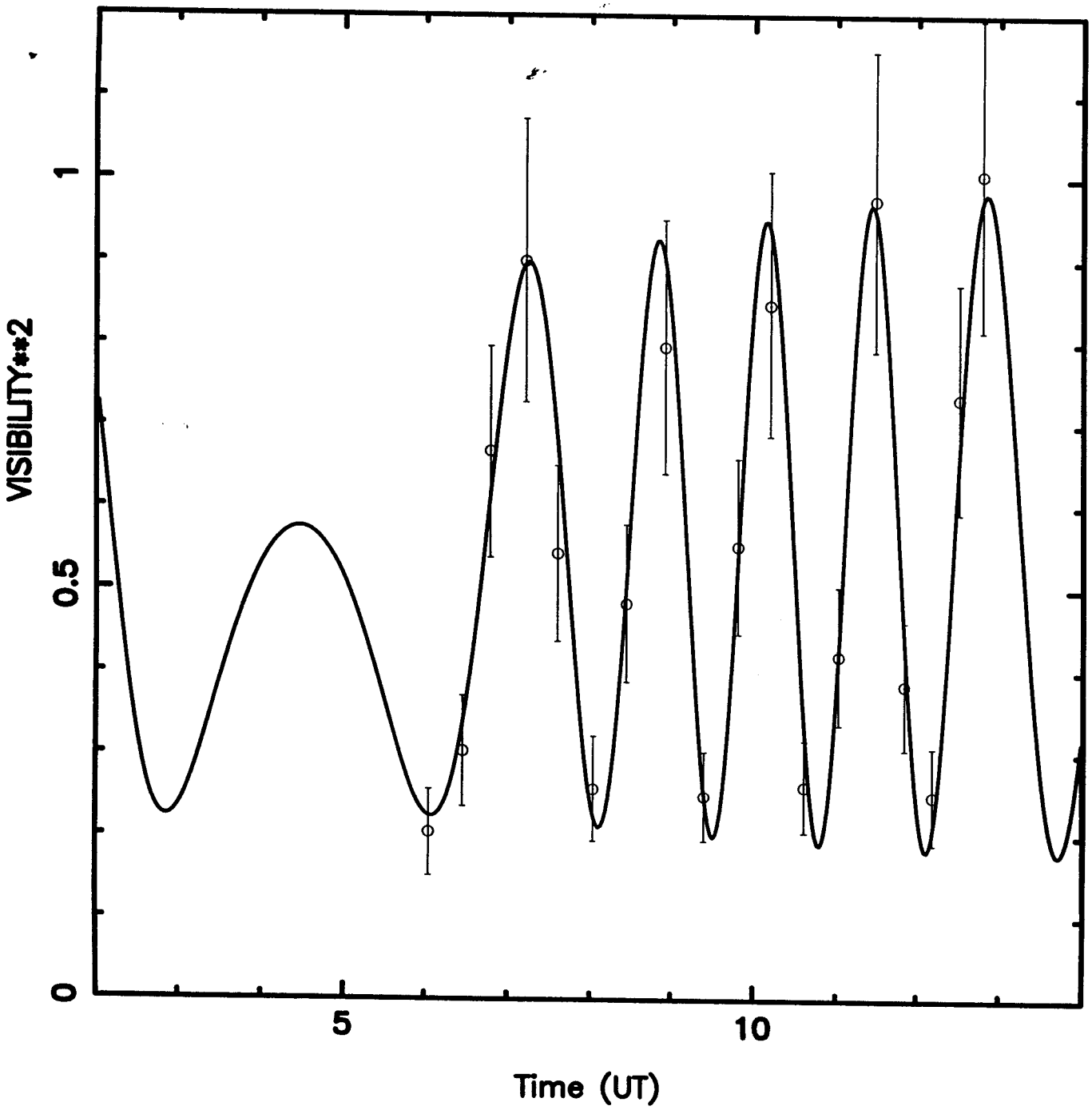
VISIBILITY**2
0
0.5
1
5
10
Time (UT)

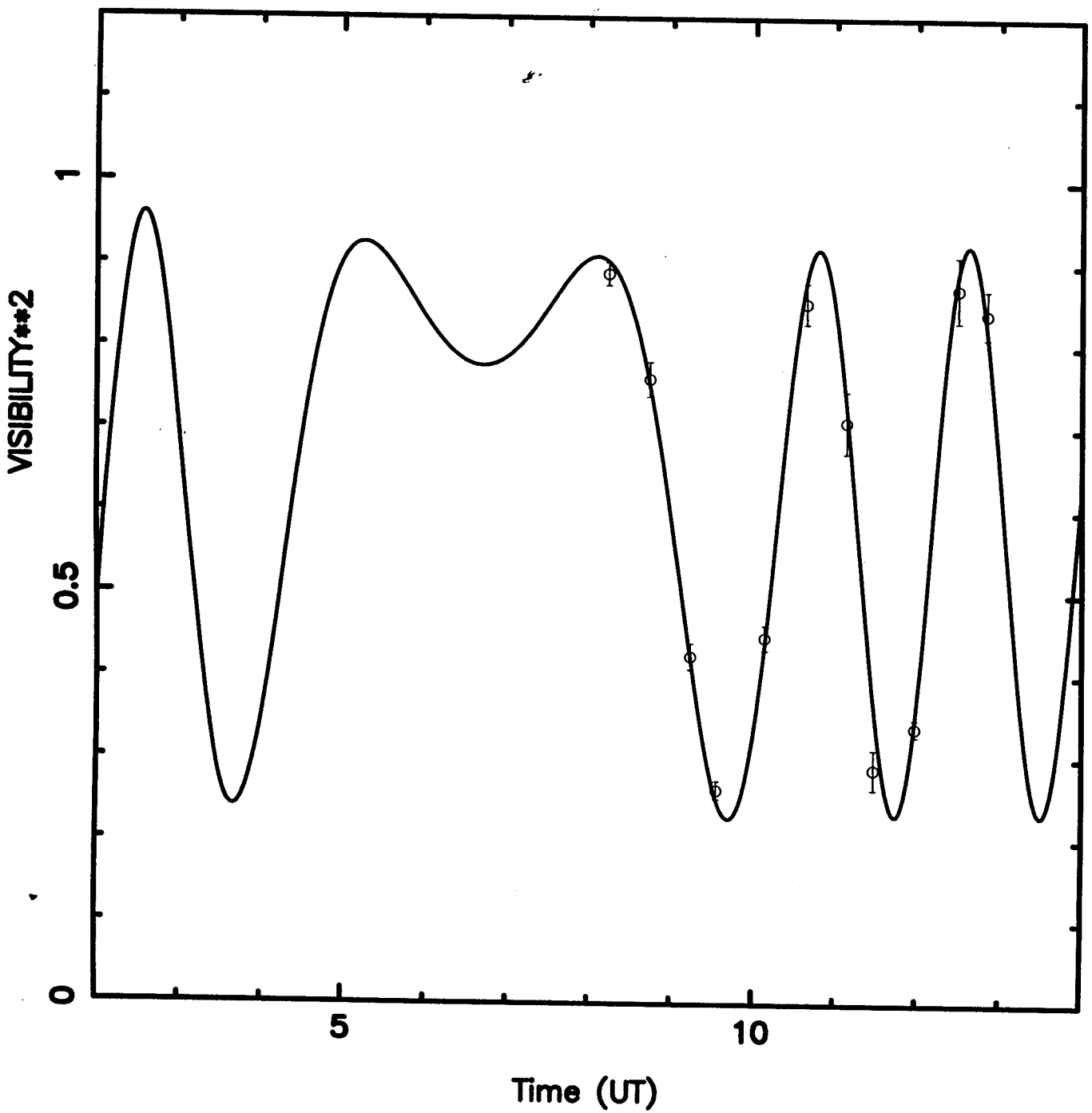
VISIBILITY**2
0
0.5
1
5
10
Time (UT)

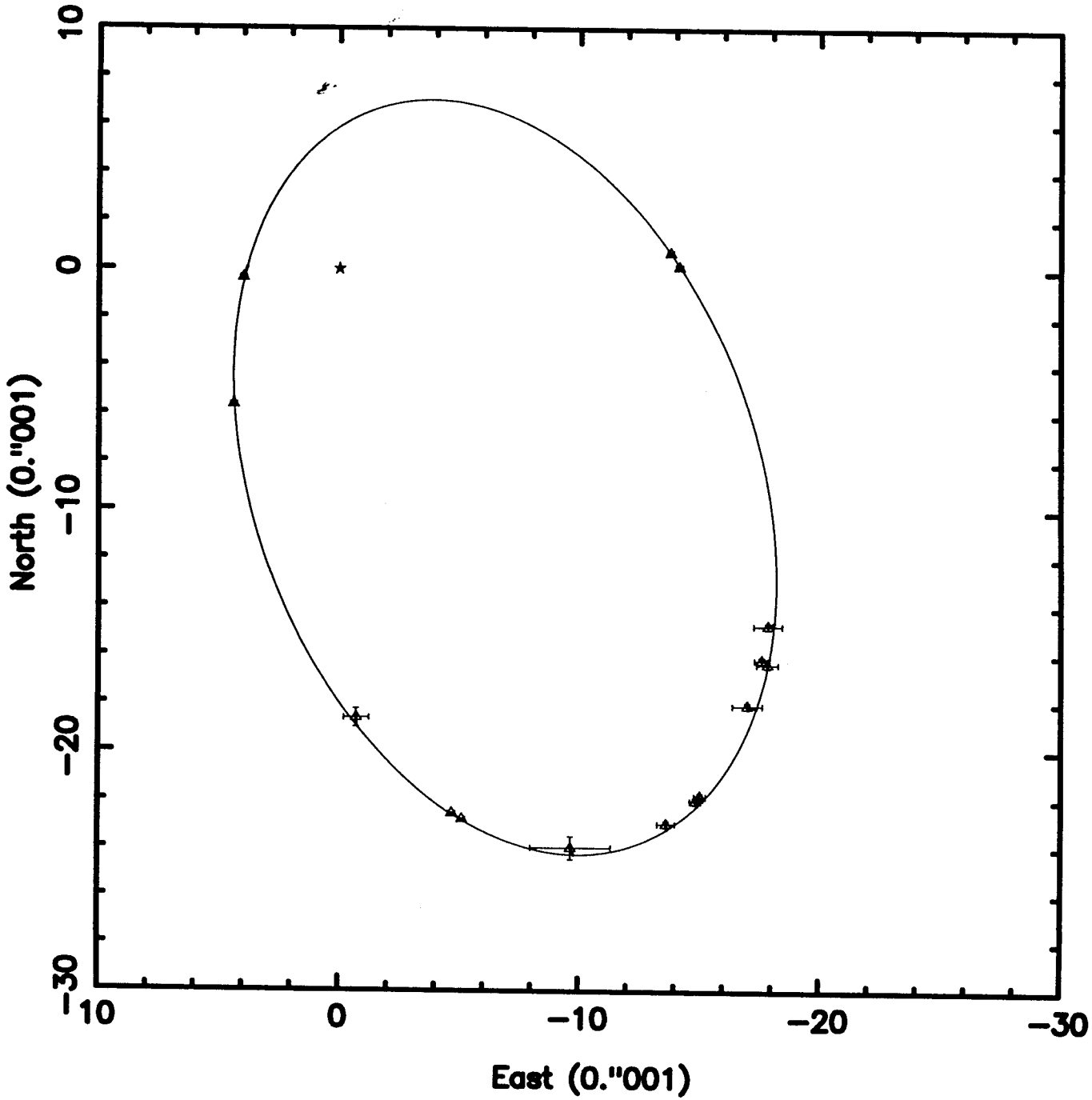
10
0
−10
−20
−30
North (0."001)
10
0
−10
−20
−30
East (0."001)

Table 3. Comparisons of Orbital Elements of θ^2Tauri

	Spectroscopy								Interferometry	
	Ebbighausen (1959)		Peterson et al. (1993)		Tomkin et al. (1995)		Torres et al. (1997)		PTI & Mark III (1998)	
P(days)	140.728	±0.004	140.7308	±0.0020	140.728	fixed	140.72816	0.00093	140.710	±0.015
T_0(JD)	36489.792	±0.129	48171.02	±0.32	49295.70	±0.14	49015.32	±0.12	50281.7	±0.12
e	0.750	±0.006	0.703	±0.011	0.732	±0.005	0.7266	±0.0049	0.735	±0.005
a''(mas)	—	—	—	—	—	—	—	—	19.15	0.25
i(°)	—	—	—	—	—	—	—	—	47.3	0.9
w(°)	49.1	±1.3	51.2	±1.8	44.3	±1.4	56.4	±1.1	56.0	±1.2
Ω(°)	—	—	—	—	—	—	—	—	173.4	1.8

Note:
1. T_0 is JD2400000+ value in columns

Table 4. Luminosities and Color Indices of θ^2 Tauri

Band (nm)	Both (mag)	Δm (mag)	Primary (mag)	Secondary (mag)
450	3.57±0.01	1.07±0.04	3.91±0.04	4.98±0.04
V	3.40±0.01	1.10±0.05	3.73±0.04	4.83±0.04
800	3.12±0.01	1.15±0.07	3.44±0.03	4.59±0.04
K	2.92±0.01	1.20±0.03	3.25±0.03	4.37±0.03
450-V	0.18±0.01	—	0.18±0.01	0.15±0.01
V-800	0.27±0.01	—	0.29±0.02	0.22±0.02
V-K	0.47±0.01	—	0.48±0.02	0.46±0.02

Table 5. Comparisons between Lunar Occultation and Interferometry

	Lunar Occultation		Interferometry
	Evans et al. (1980)	Peterson et al. (1981)	PTI & Mark III (this work)
Separation (mas)	11.3±0.3	——	13.2±0.2
	11.8±0.6	——	13.2±0.2
	——	20.77±0.15	19.9±0.2
Δm (mag)	0.61±0.09 (467nm)	1.07±0.04 (440nm)	1.16±0.13 (450nm)
	0.96±0.17 (547nm)	1.18±0.05 (630nm)	1.18±0.10 (550nm)
	——	1.04±0.06 (790nm)	1.15±0.07 (800nm)
	——	——	1.12±0.03 (2.2μm)

Table 6. Physical Parameters of θ^2 Tauri

P (day)	140.72816±0.00093
a (AU)	0.86 ± 0.03
Distance (pc)	45.0 ± 1.6
Parallax (mas)	22.2 ± 0.8
M_{vA} (mag)	0.46 ± 0.04
M_{vB} (mag)	1.56 ± 0.05
$(B-V)_A$ (mag)	0.18 ± 0.01
$(B-V)_B$ (mag)	0.15 ± 0.01
$(V-K)_A$ (mag)	0.48 ± 0.02
$(V-K)_B$ (mag)	0.46 ± 0.02
Spectrum(A)	A3 III
Spectrum(B)	A5 V
$m_A(m_\odot)$	2.30 ± 0.30
$m_B(m_\odot)$	2.01 ± 0.16

Table 4. Comparisons between Lunar Occultation and Interferometry

JD	Interferometry		Occultation		Calculated	$\rho' - \rho''$
2400000+	$\rho_{(mas)}$	$\theta(°)$	$\theta'(°)$	$\rho'_{(mas)}$	$\rho''_{(mas)}$	(mas)
40221.6	9.23	181.6	56	6.2	5.4	0.8
41396.4	11.17	174.5	124	7.4	7.1	0.3
41724.7	15.28	161.2	49	4.0	5.9	1.9
2400000+	ΔM(mag)		ΔM(mag)			$\lvert\delta\rvert$(mag)
40221.6	1.6 ± 0.1		1.90		(at B)	0.30
41396.4	1.6 ± 0.1		1.63		(at B)	0.03
41724.7	1.6 ± 0.1		1.50		(at B)	0.1

Notes:
1. no error estimates for lunar occultation measurements.
2. lunar occultation use Johson B filter of 440 nm.
3. Mark III interferometer use a filter of 450 nm. The magnitude difference from the Mark III is an average value of multiple nights.

Table 3. Orbital Elements of Atlas

	Spectroscopy (Abt1965)	Hipparcos (Perriman97)		Interferometry (this work)	
P(days)	1254.68	290.6598	± 8.5642	290.81	± 0.06
$T_0(JD)^a$	15870.6	48305.6949	± 26.6108	50582.8	± 1.5
e	0.137	0.0	—	0.2457	± 0.006
$i(°)$	—	106.72	± 25.02	108.5	± 0.5
a''(mas)	—	4.23^b	± 0.97	12.94	± 0.11
$\omega(°)$	213	0.0	—	152.1	± 1.4
$\Omega(°)$	—	111.54	± 38.48	155.0	± 0.6

Note:
a). JD2400000+
b). it is the semi-major axis of the photocentre orbit

Table 5. Luminosities and Color Indices of Atlas (unit: mag)

	Both	Δm	Primary	Secondary
V band	3.62 ± 0.01^a	1.68 ± 0.07^b	3.83 ± 0.01	5.52 ± 0.05
K band	3.80 ± 0.01	1.92 ± 0.06^c	3.97 ± 0.01	5.89 ± 0.05
V - K	-0.18 ± 0.01^a		-0.14 ± 0.01	-0.37 ± 0.07

Note:
a). Measured by Johnson 1965
b). Measured by the Mark III Interferometer
c). Measured by the PTI Interferometer

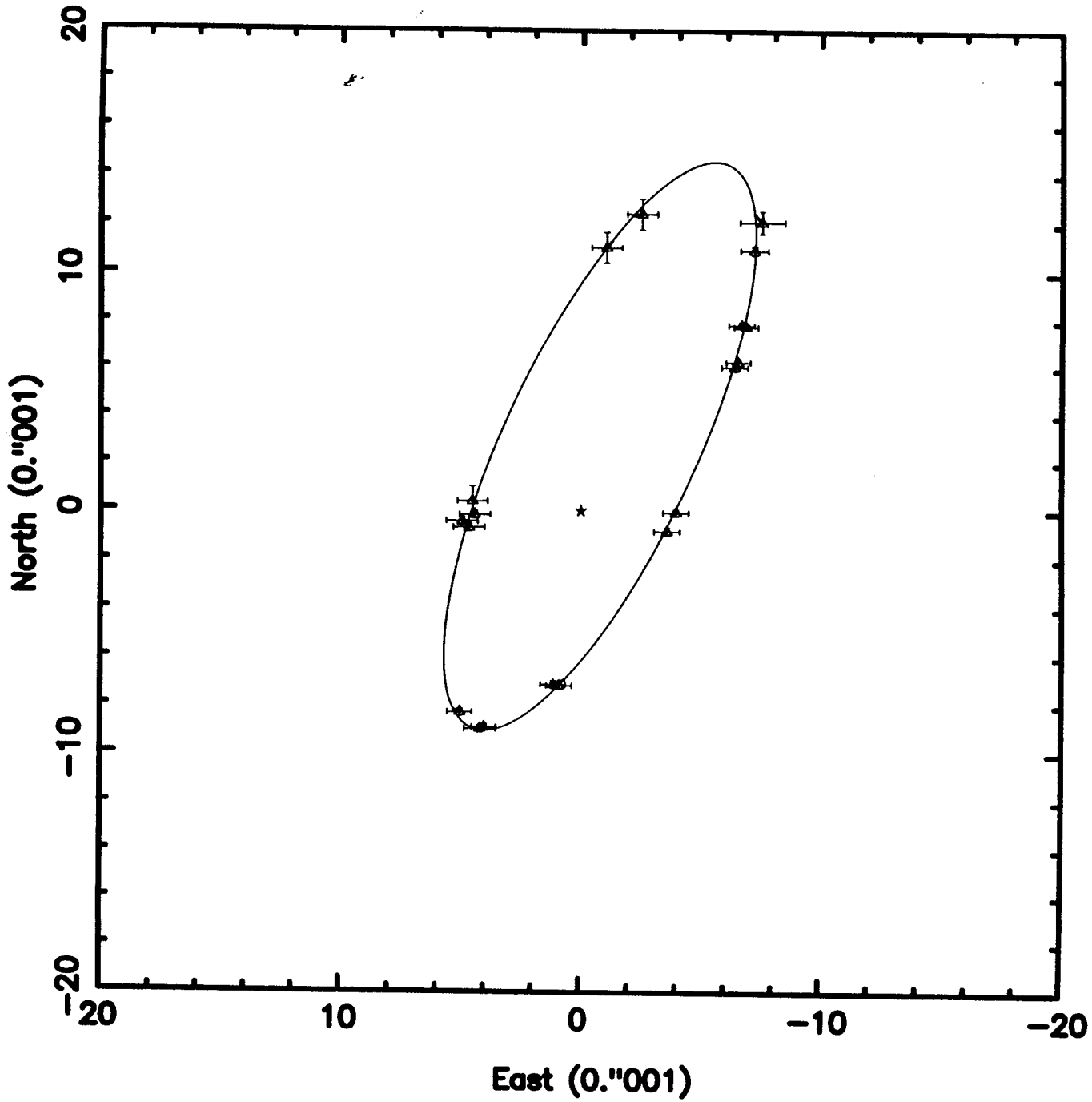
20
10
0
−10
−20
North (0."001)
20
10
0
−10
−20
East (0."001)

Distance to the Pleiades

	distance	parallax	distance modulus
Hipparcos	116 +/- 3 pc	8.6 +/- 0.23mas	5.32+/-0.06 mag
MAP	150 +/- 18 pc	6.6 +/- 0.8 mas	5.9 +/- 0.26 mag
MS fitting	132 +/- 2.3 pc	7.6 +/- 0.13 mas	5.60 +/- 0.04 mag
Interferometer	130 +/- 2 pc	7.7 +/- 0.12 mas	5.57 +/- 0.03 mas

period(day)
290.81
a"(mas)
12.936

tot.Mass	Distance
4	105.4142
4.5	109.6352
5	113.5540
5.35	116.1441
6	120.6692
6.5	123.9321
7	127.0316
7.2	128.2301
7.4	129.4066
7.5	129.9869
8	132.8136
8.5	135.5248
9	138.1317
9.5	140.6438
10	143.0691
10.5	145.4149
11	147.6874

Table 4. Wide-angle Measurements of FK5 Stars in 1988 & 1989 with the Mark III Interferometer

FK5	Offset in R.A. (ms)				Offset in Decl. (mas)			
	1988	1989	Mean	Δ	1988	1989	Mean	Δ
19	-2.0 ± 0.5	-0.7 ± 0.5	-1.3	-1.3	-2 ± 5	-18 ± 6	-10	16
33	-1.8 ± 0.6	-1.7 ± 0.6	-1.7	-0.1	15 ± 5	13 ± 6	14	2
52	-2.2 ± 0.7	-2.7 ± 0.8	-2.5	0.5	25 ± 6	29 ± 8	27	-4
66	7.0 ± 0.5	6.7 ± 0.6	6.8	0.3	3 ± 6	14 ± 8	9	-11
79	-0.5 ± 0.6	1.7 ± 1.0	0.6	-2.2	-90 ± 6	-124±10	-107	34
835	2.4 ± 0.5	2.1 ± 0.4	2.3	0.3	66 ± 5	80 ± 4	73	-14
848	6.2 ± 0.7	4.3 ± 0.6	5.2	1.9	-46 ± 6	-43 ± 5	-45	-3
862	-5.3 ± 0.5	-4.2 ± 0.4	-4.7	-1.1	-35 ± 5	-32 ± 4	-34	-3
1534	2.5 ± 0.6	0.3 ± 0.3	1.4	2.2	-10 ± 5	-7 ± 4	-9	-3
1568	0.6 ± 0.7	-0.7 ± 0.5	-0.0	1.3	25 ± 5	34 ± 4	30	-9
1619	-5.8 ± 0.7	-6.4 ± 0.7	-6.1	0.6	-7 ± 5	2 ± 7	-3	-9

Table 3:

Two-Color Positions Relative to FK5 with 1-σ Formal Errors

FK5 no.	scans	right ascension offset (mas)		declination offset (mas)	
724	24	+ 90.2	±15.3	+54.3	± 7.1
1534	46	+ 35.4	± 8.7	− 8.8	± 5.2
1568	49	+ 10.9	±10.5	+27.8	± 5.6
835	60	+ 36.2	± 7.9	+69.4	± 4.9
848	50	+ 99.1	±10.9	−42.5	± 5.9
862	58	− 78.2	± 7.1	−32.9	± 5.1
1619	54	− 86.3	±10.1	− 2.7	± 5.3
19	51	− 28.7	± 8.2	+ 0.6	± 5.4
33	57	− 24.1	± 8.8	+17.3	± 5.3
52	44	− 30.6	±11.7	+25.2	± 6.3
66	46	+103.9	± 8.0	+ 7.1	± 6.3
79	49	− 6.8	± 8.9	−85.3	± 6.3
	total scans		mean error		mean error
	588		9.2		5.6

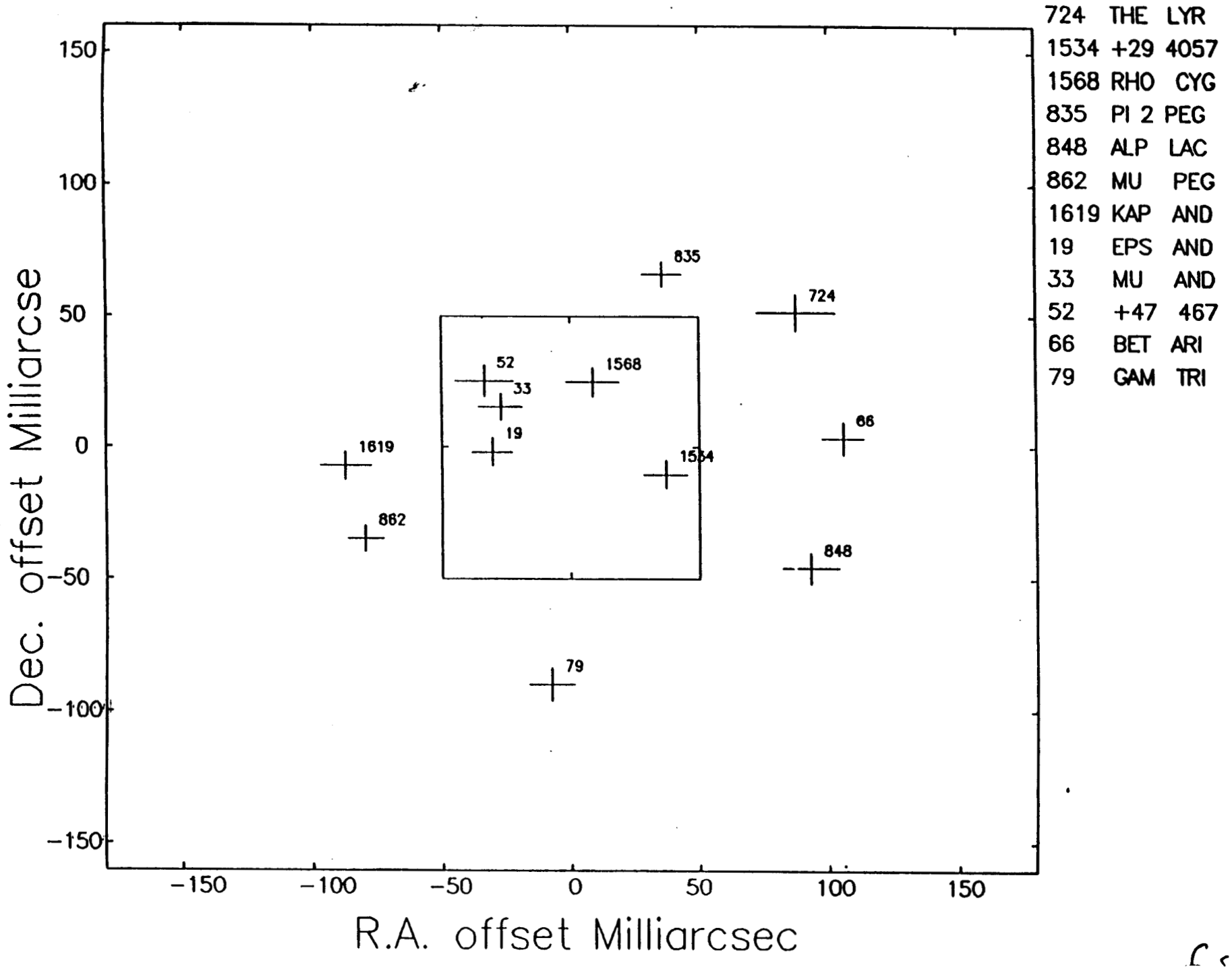
724 THE LYR
1534 +29 4057
1568 RHO CYG
835 PI 2 PEG
848 ALP LAC
862 MU PEG
1619 KAP AND
19 EPS AND
33 MU AND
52 +47 467
66 BET ARI
79 GAM TRI
835
724
52
1568
33
19
66
1619
1534
862
848
79
150
100
50
0
-50
-100
-150
Dec. offset Milliarcse
R.A. offset Milliarcsec

Fig 9

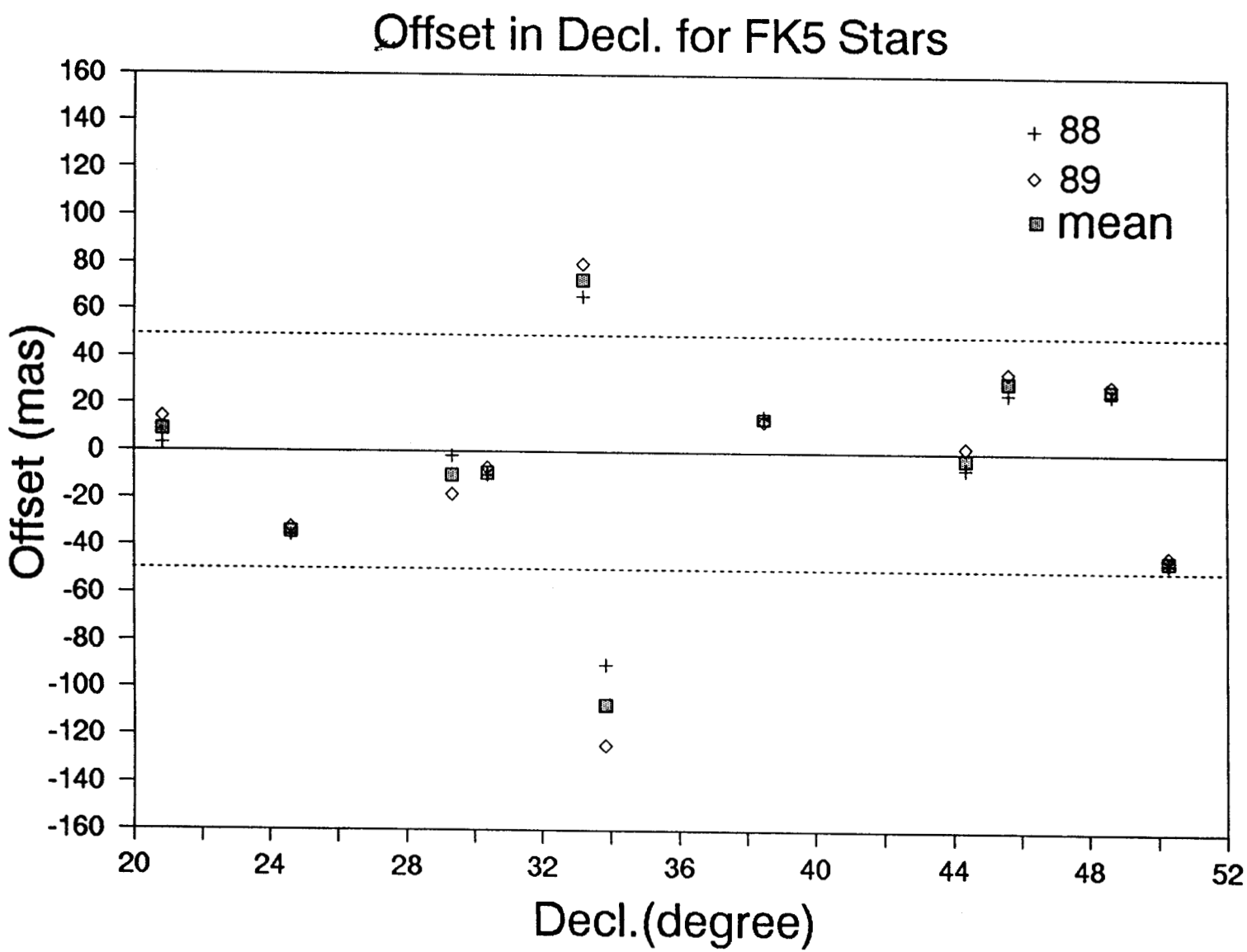
Offset in Decl. for FK5 Stars
88
89
mean
Offset (mas)
160
140
120
100
80
60
40
20
0
-20
-40
-60
-80
-100
-120
-140
-160
20
24
28
32
36
40
44
48
52
Decl.(degree)

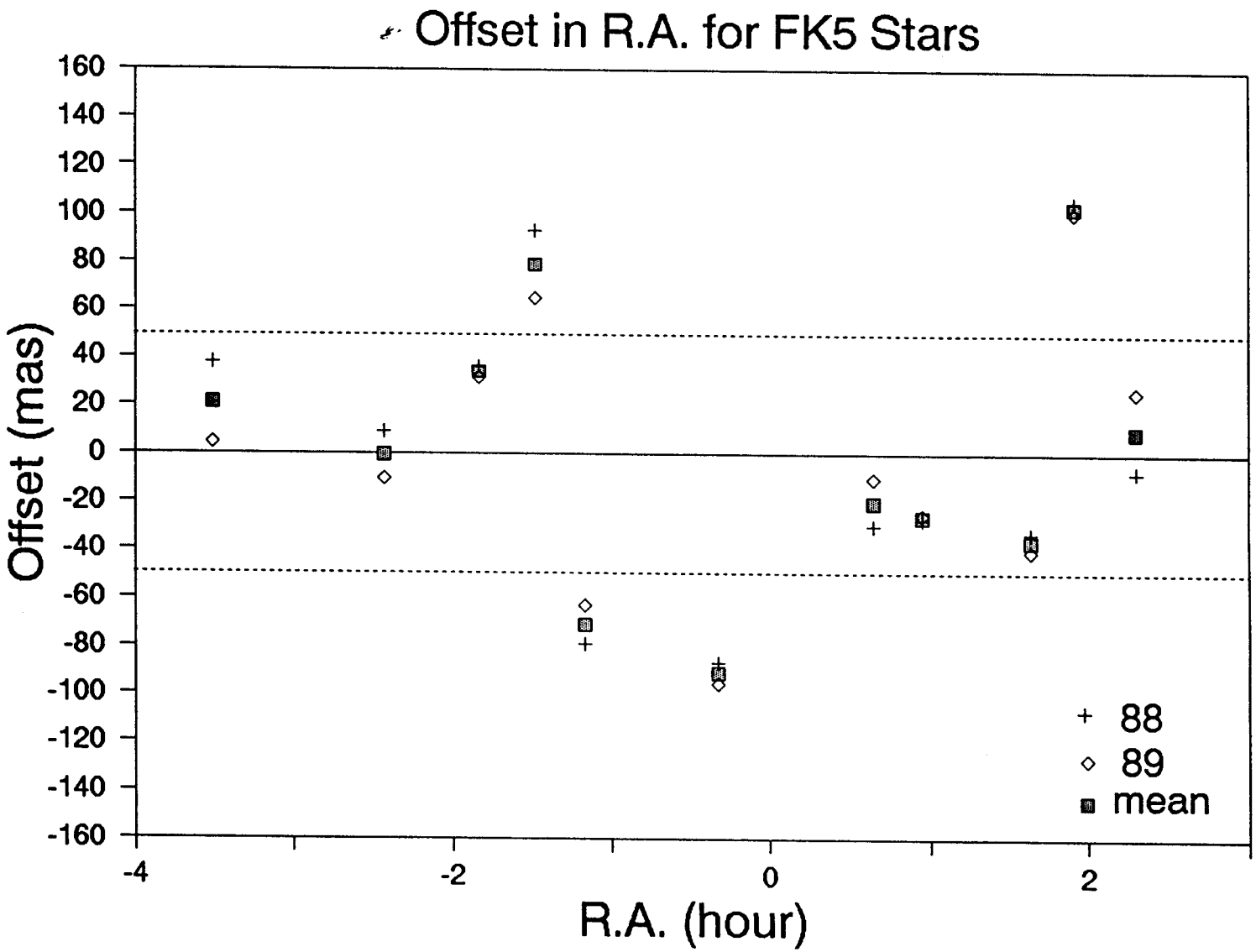
Offset in R.A. for FK5 Stars
Offset (mas)
160
140
120
100
80
60
40
20
0
-20
-40
-60
-80
-100
-120
-140
-160
-4
-2
0
2
R.A. (hour)
88
89
mean

Atmospheric limits to narrow-angle astrometry

- The fundamental limits to narrow-angle astrometry from the ground are surprisingly small
- With long baselines (100 m) and small star separations (20"), the atmospherically-limited astrometric accuracy is 20 uas for a 1-hr integration
  - Measurements made at Mt. Wilson using a 12-m baseline and a 3.3" star separation are consistent with theoretical predictions
- To take advantage of this behavior, you need
  - Long baselines to reduce atmospheric and photon-noise errors
  - Phase referencing to increase sensitivity to find a nearby reference star within the isoplanatic patch
  - Infrared operation for a large isoplanatic patch, high sensitivity, and long baselines without resolving nearby stars
    - Large apertures increase sky coverage
  - Dual-star operation to make a true simultaneous measurement

Accuracy of Narrow-Angle Astrometry

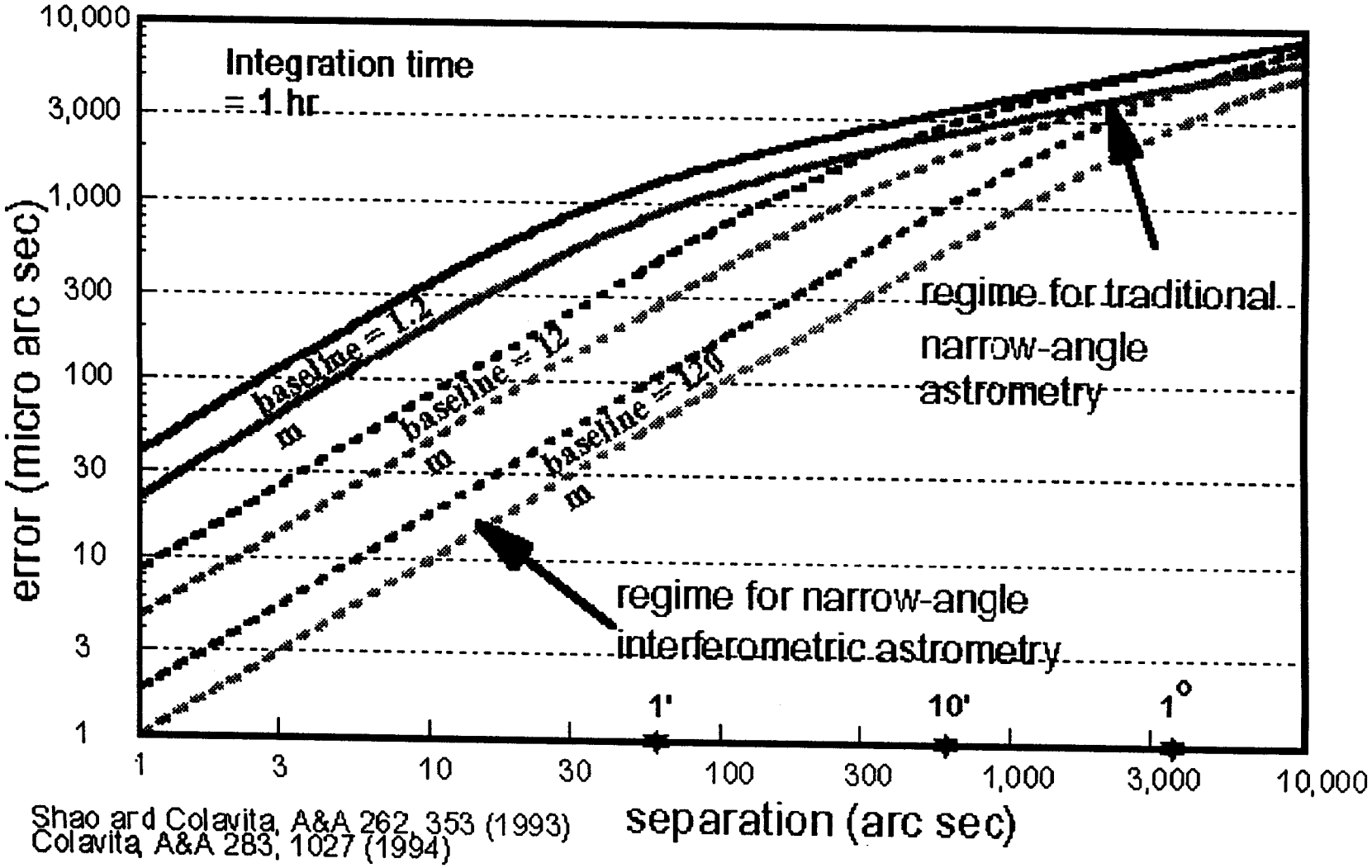

Shao and Colavita, A&A 262, 353 (1993)
Colavita, A&A 283, 1027 (1994)

Astrometric Technique

Jupiter-Sun system at 10 pc

a" = 0."52 Jupiter 27 mag
a1 = 0.52 mas Sun 5 mag

p-p wobble 1 mas