STARDUST

STARDUST - Capture and Return of Wild-2 and Interstellar Samples

IAU 181 Colloquium, University of Kent at Canterbury, UK

STARDUST
SCIENCE ADVISORS

Arden L. Albee (*California Institute of Technology*)

John R. Cronin (*Arizona State University*)

Peter Eberhardt (*University of Bern*)

Robert O. Pepin (*University of Minnesota*)

Jerry J. Wasserburg (*California Institute of Technology*)

Robert M. Walker (*Washington University*)

John A. Wood (*Smithsonian Astrophysical Observatory*)

STARDUST

SCIENCE INVESTIGATORS

Donald E. Brownlee (*University of Washington*) Principal Investigator
Peter Tsou (*Caltech Jet Propulsion Laboratory*) Deputy Principal Investigator
John D. Anderson (*Caltech Jet Propulsion Laboratory*) Dynamics Science Lead
Benton C. Clark (*Lockheed Martin Astronautics*) Co-Investigator
Martha S. Hanner (*Caltech Jet Propulsion Laboratory*) Co-Investigator
Friedrich Horz (*NASA Johnson Space Center*) Co-Investigator
Jochen Kissel (*Max Planck Institut fur Kernphysik*) CIDA Lead
J. Anthony M. McDonnell (*University of Kent*) Co-Investigator
Ray L. Newburn (*Caltech Jet Propulsion Laboratory*) Imaging Lead
Scott A. Sandford (*NASA Ames Research Center*) Co-Investigator
Zdenek Sekanina (*Caltech Jet Propulsion Laboratory*) Co-Investigator
Anthony J. Tuzzolino (*University of Chicago*) DFM Lead
Michael E. Zolensky (*NASA Johnson Space Center*) Co-Investigator

MISSION SCIENCE SUMMARY
COMET ENCOUNTER

- Aerogel Collector, Tsou
  Wild 2 sample collection/return to Earth
  >1000 particles >15μm
- Comet Interstellar Dust Analyzer (CIDA), Kissel
  Mass spectra of individual particles
- Imaging Camera, Newburn
  - High resolution nucleus images
- Dust Flux Monitor (DFMI), Tuzzolino/McDonnell
  - Dust flux with PVDF and acoustic sensors
- Dynamics Science, Anderson
  - Integrated and individual dust flux
  - May be cometary mass

MISSION SCIENCE SUMMARY
CRUISE

- Collection of interstellar dust
  - Contemporary interstellar dust > 100 particles
- CIDA mass spectra of interstellar dust
- Interplanetary and IS dust detection with DFMI
- Earth anomaly and solar conjunctions

SCIENCE RETURN HOPES
CIDA

- WILD-2
  - Comet dust composition
  - Comparison with collected samples
  - What volatiles are lost in collected samples
  - Composition of particles too small to collect
  - The nature of CHON
  - Comparison with Halley and interplanetary dust spectra
- Interstellar Dust Composition
  - Major elemental composition
  - Relationship between CHON and silicate materials
  - Importance of SiC and grains formed in high C/O environments

SCIENCE RETURN HOPES
Imaging & Dust Flux

- Imaging Camera
  - Gas/dust source regions
  - Crust structure and surface processes
  - Detection of impact craters on an unusually old SP comet surface
  - Coma structure
- DFMI
  - Size distribution and flux at Wild-2
  - Meteor stream discovery during cruise
  - Radial distribution of interplanetary dust

SCIENCE RETURN HOPES

Samples

- How do cometary solids compare with compositional fractionation trends seen in meteorites?
  - Volatiles
  - Refractories Ca, Al, Ti
  - Fe/Si
- Comparison with IDPs and meteorites
  - What fraction of comet dust is composed of preserved IS grains

SCIENCE RETURN HOPES

Samples

- Performance of Aerogel Collectors
  - Captured dust flux
  - Degree of capture modification
  - Survival of volatiles
- Performance of Foil Collectors
  - Degree of particle capture
  - Capture modification

Mission Scenarios (Loop 1)

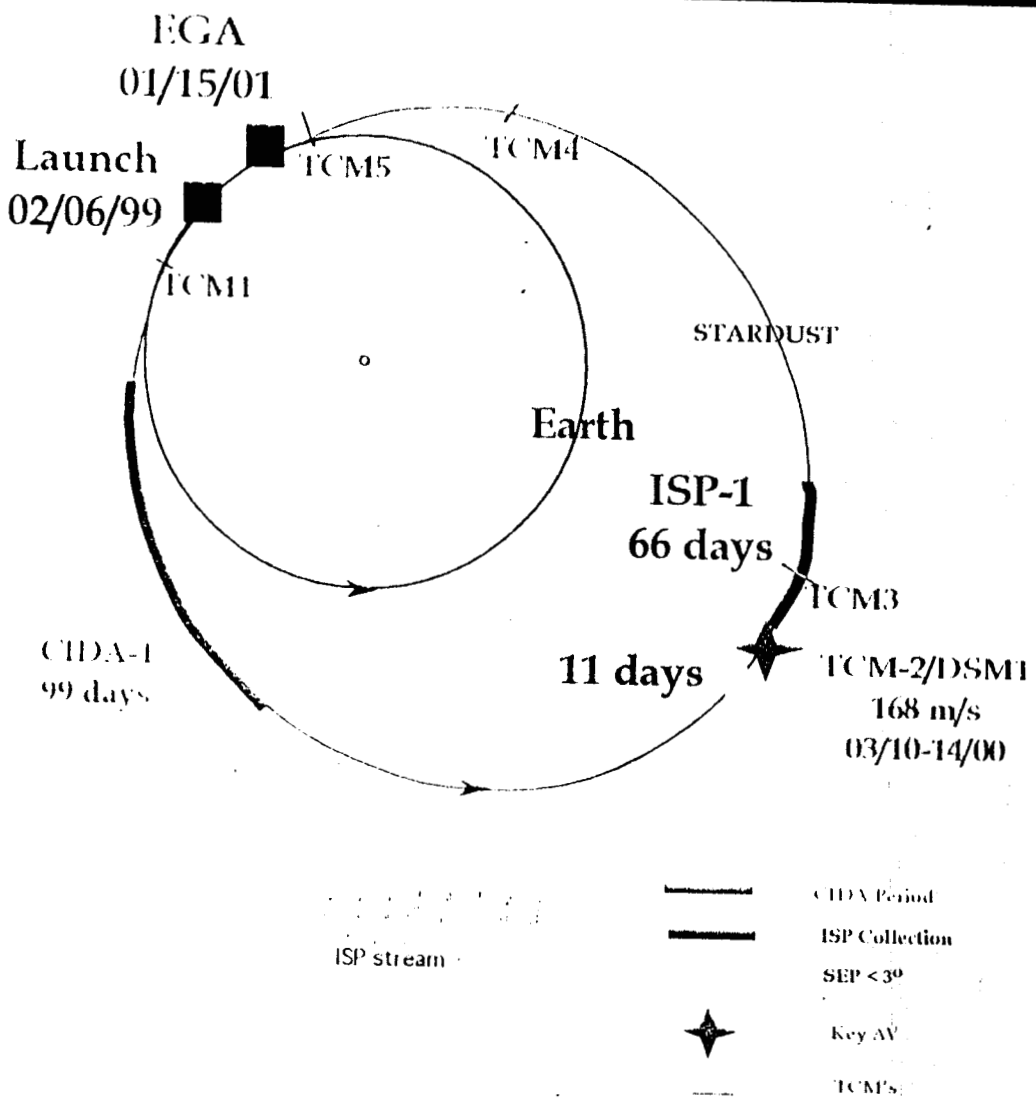

Science

CIDA #1

- L+45 - 144 d
- Dur: 99 d, Unit area: 52 d
- Vimp: 58.7 - 42.1 km/s

ISP #1

- L+403 - 469 d
- Dur: 66 d, all full grid
- Vimp: 11.7 - 9.9 - 10.1 km/s

DFMI

- EGA, L+709
- dust particles exp.
- +x // sc velocity

JPL

Mission Scenario (Loop 2)

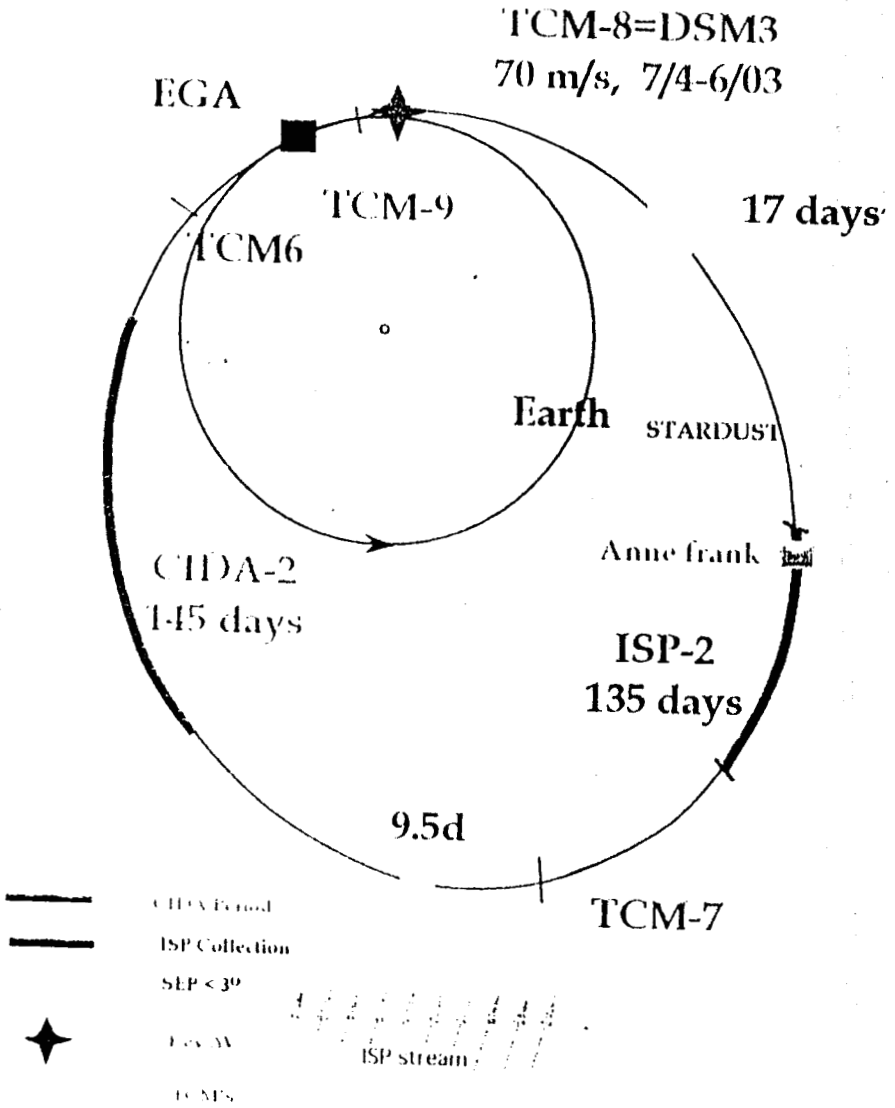

science

CIDA #2

- L+769 - 914 d
- Dur: 145 d, Unit area: 74 d
- Vimp: 57.1 - 41.1 km/s

ISP #2

- L+1267 - 1402 d
- Dur: 135 d, Full grid: 127 d
- Vimp: 14.8 - 9.3 - 9.6 km/s

Annefrank

- L+1364

JPL

Instrument Objectives

- INTACT CAPTURE OF COMETARY DUST
  - ELEMENTAL COMPOSITION
  - MORPHOLOGY
  - ISOTOPIC COMPOSITION
  - MINERALOGY
  - REFRACTORY ORGANICS
- INTERSTELLAR DUST
  - ELEMENTAL COMPOSITION
  - MORPHOLOGY
  - ISOTOPIC COMPOSITION
  - MINERALOGY

Spacecraft

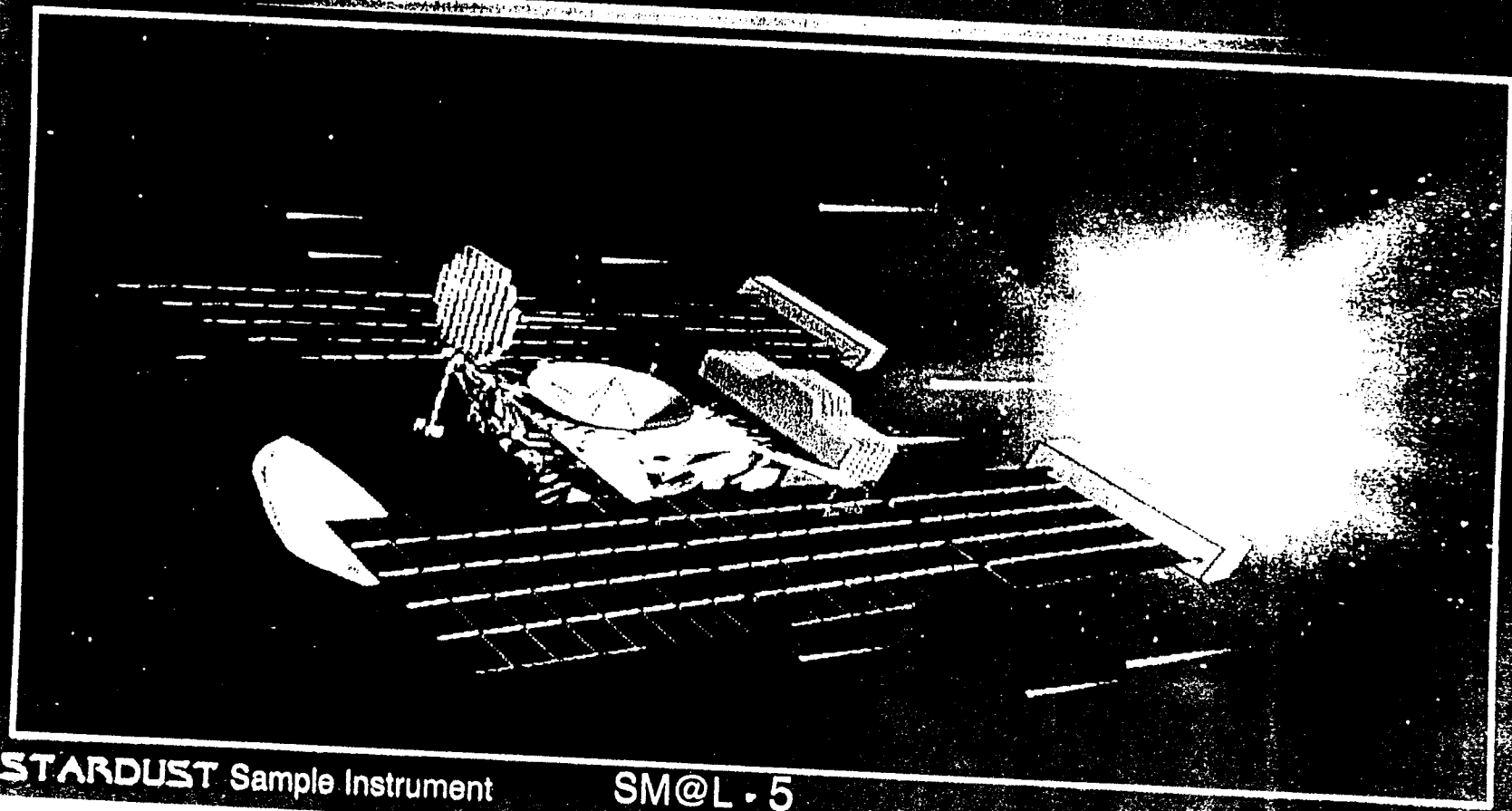

Sample Return Capsule Canister/Sample Trays

STOWED **DEPLOYED**

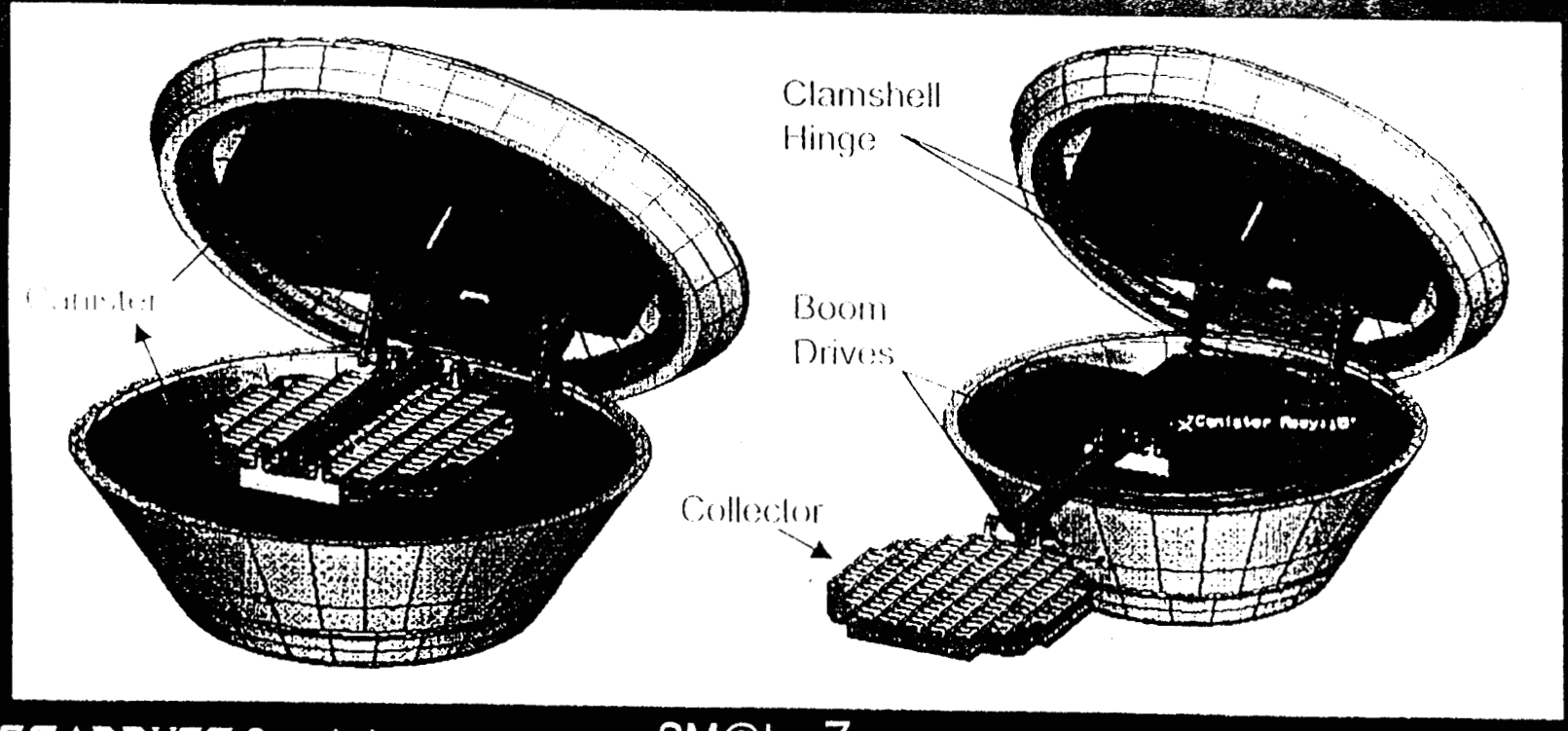

Dust Collection Modes

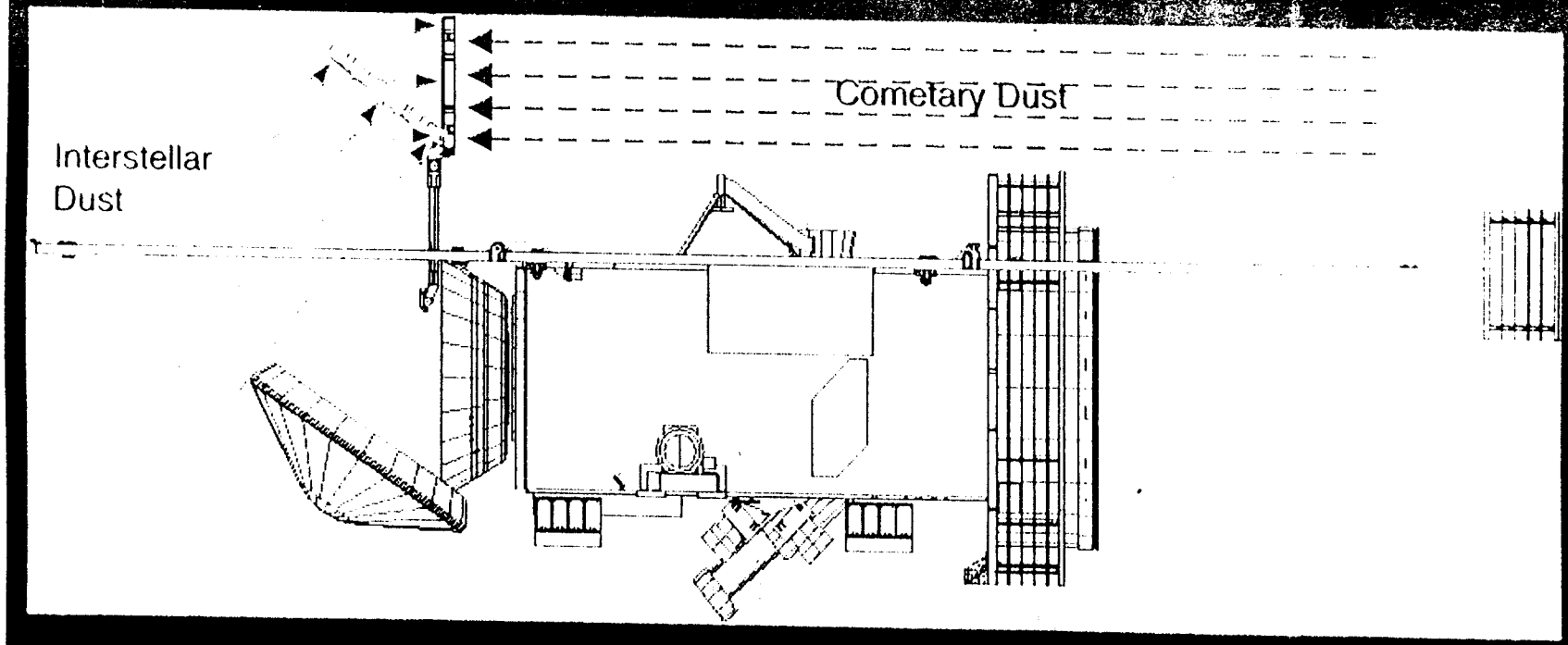

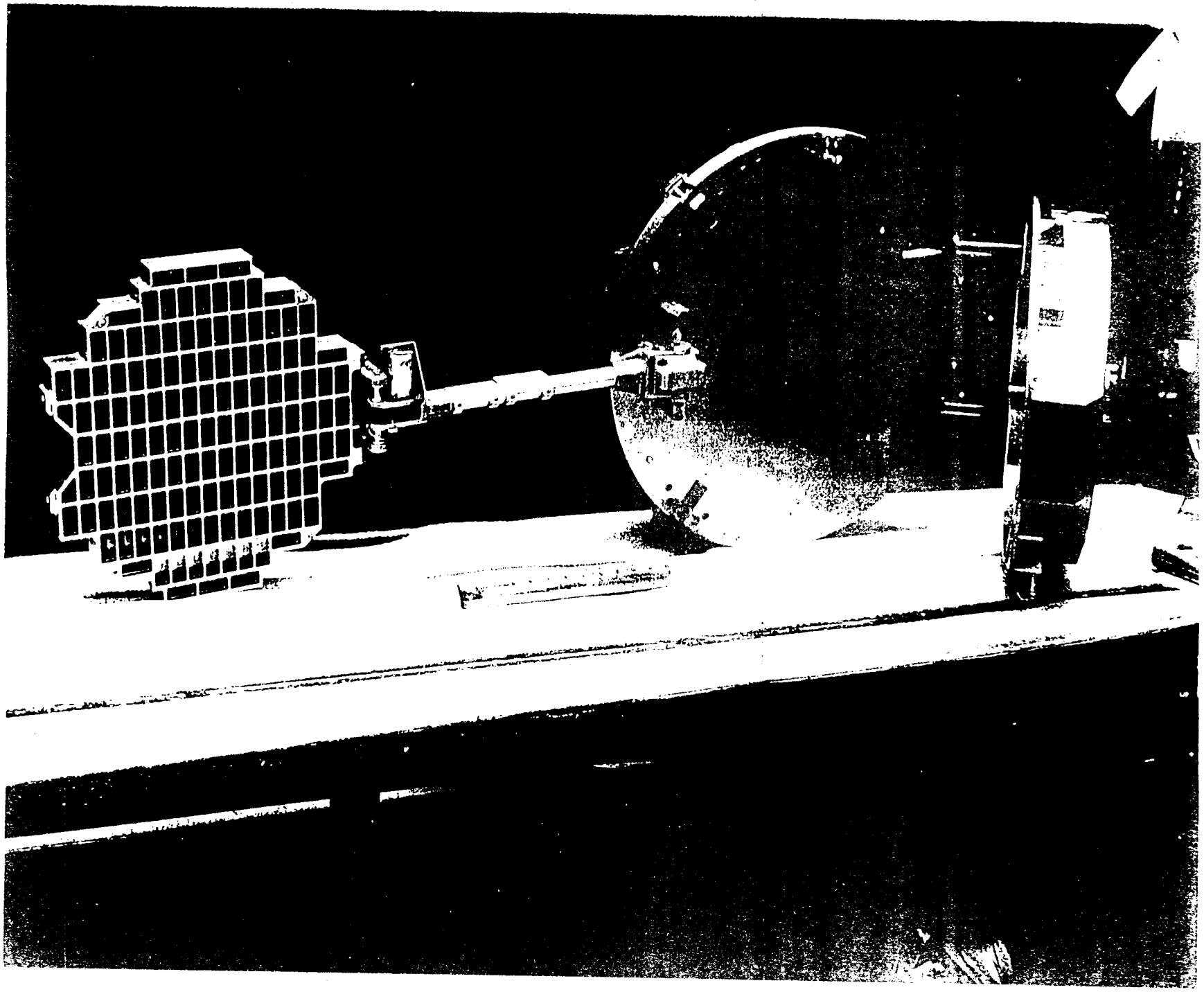

Gradient/Graded Aerogel

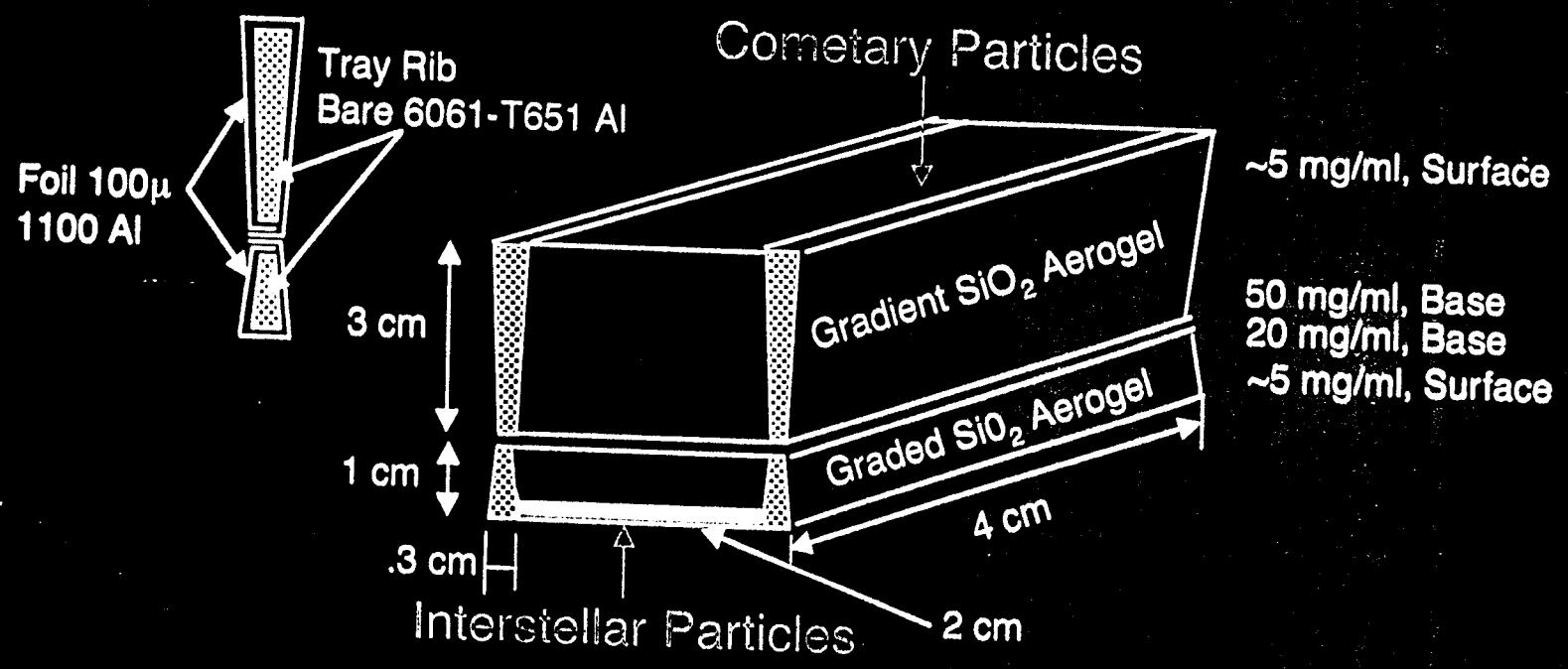

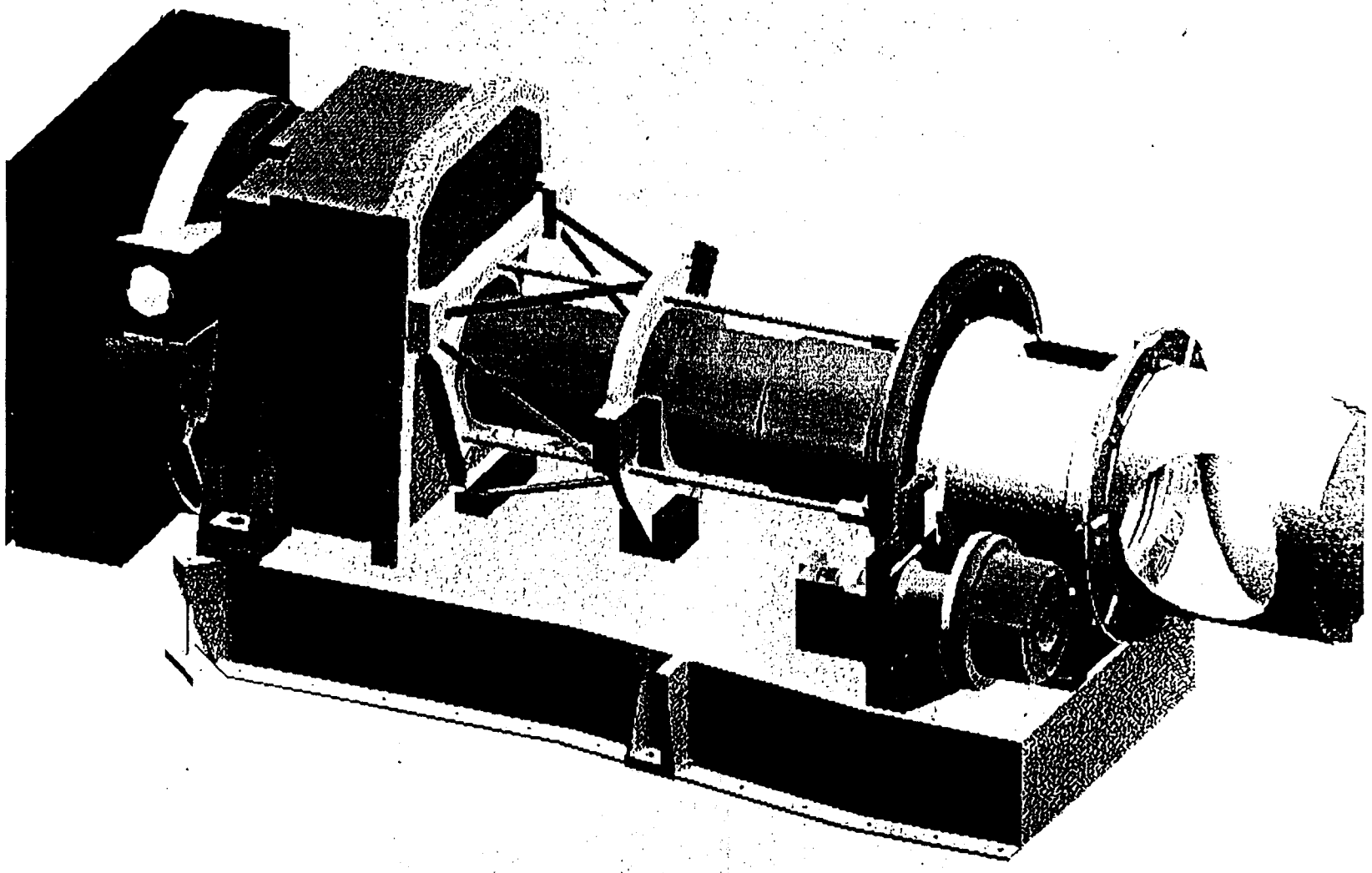

THE UNIVERSITY OF CHICAGO DUST FLUX MONITOR INSTRUMENT (DFMI) FOR THE STARDUST MISSION

DFMI CHARACTERISTICS

WEIGHTS

Electronics Box	1.200 kg
Sensor Unit	0.332 kg
Acoustic Sensors	0.064 kg
Harness	0.165 kg
Total	1.761 kg

POWER
1.8 W

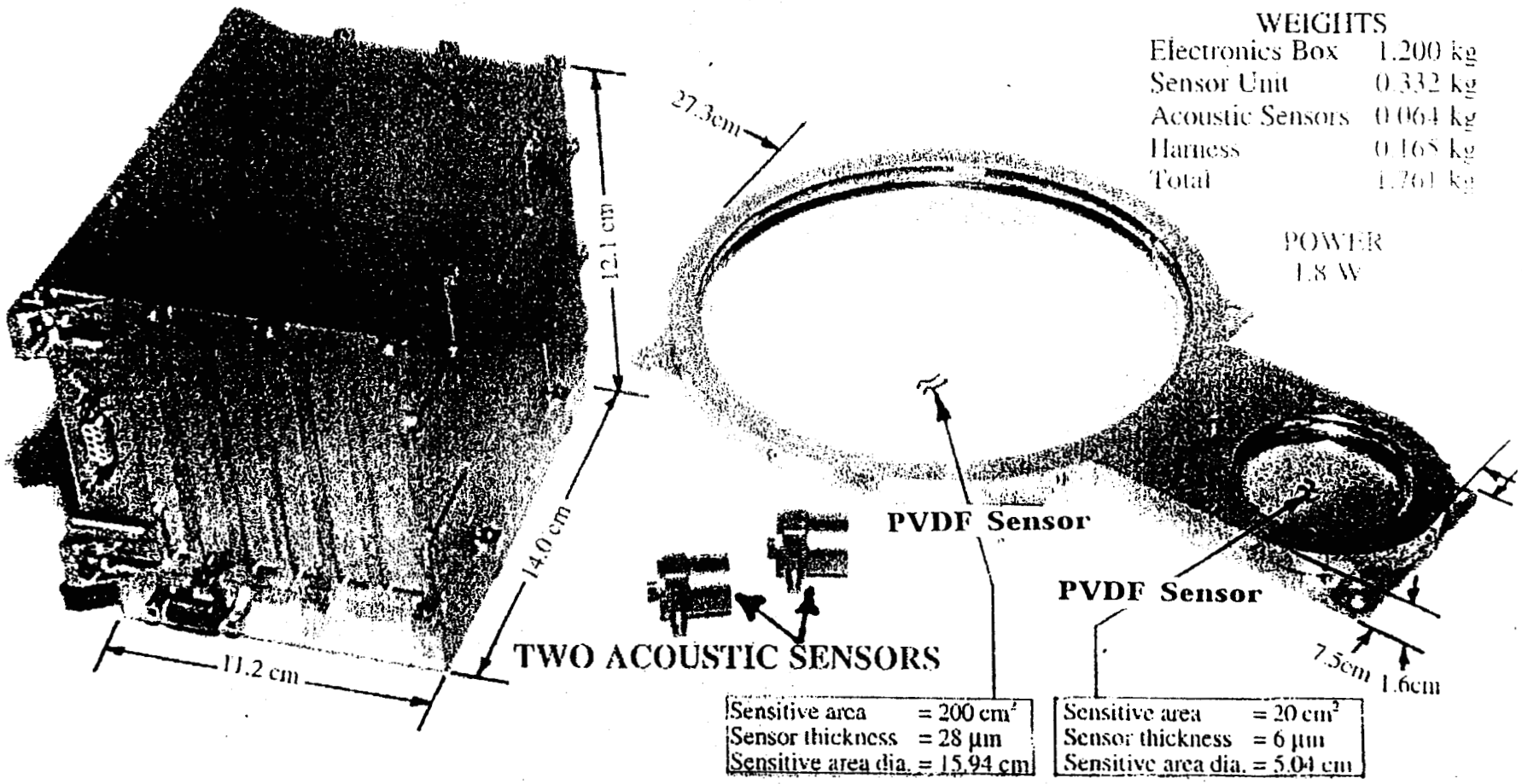

ELECTRONICS BOX (EB)

DUST SENSOR UNIT (SU)