Mid-frequency Comparison of FEA/BEA and SEA Spacecraft Predictions

Bryce Gardner
Jet Propulsion Laboratory
California Institute of Technology

Overview

- SEA Radiation Efficiency Modeling Issues
- Europa Orbiter Acoustic Response
  - SEA Modeling
  - BEA/FEA Modeling
  - Results

Radiation Efficiency

- VAPEPS Path 1
  - variation of Maidanik, 1962
  - baffled panel
  - simply supported or clamped edges
- VAPEPS Path 49
  - simple, empirical model
  - originally for mass-loaded honeycomb panels (part of the NASA Lewis Method)
  - used extensively at JPL

VAPEPS Path 49

$$\sigma_{49} = \begin{cases} \left(f / f_c \right)^2, & f < f \\ 1, & f \geq f \end{cases}$$

VAPEPS: Path 49 vs. Path 1(Maidanik)

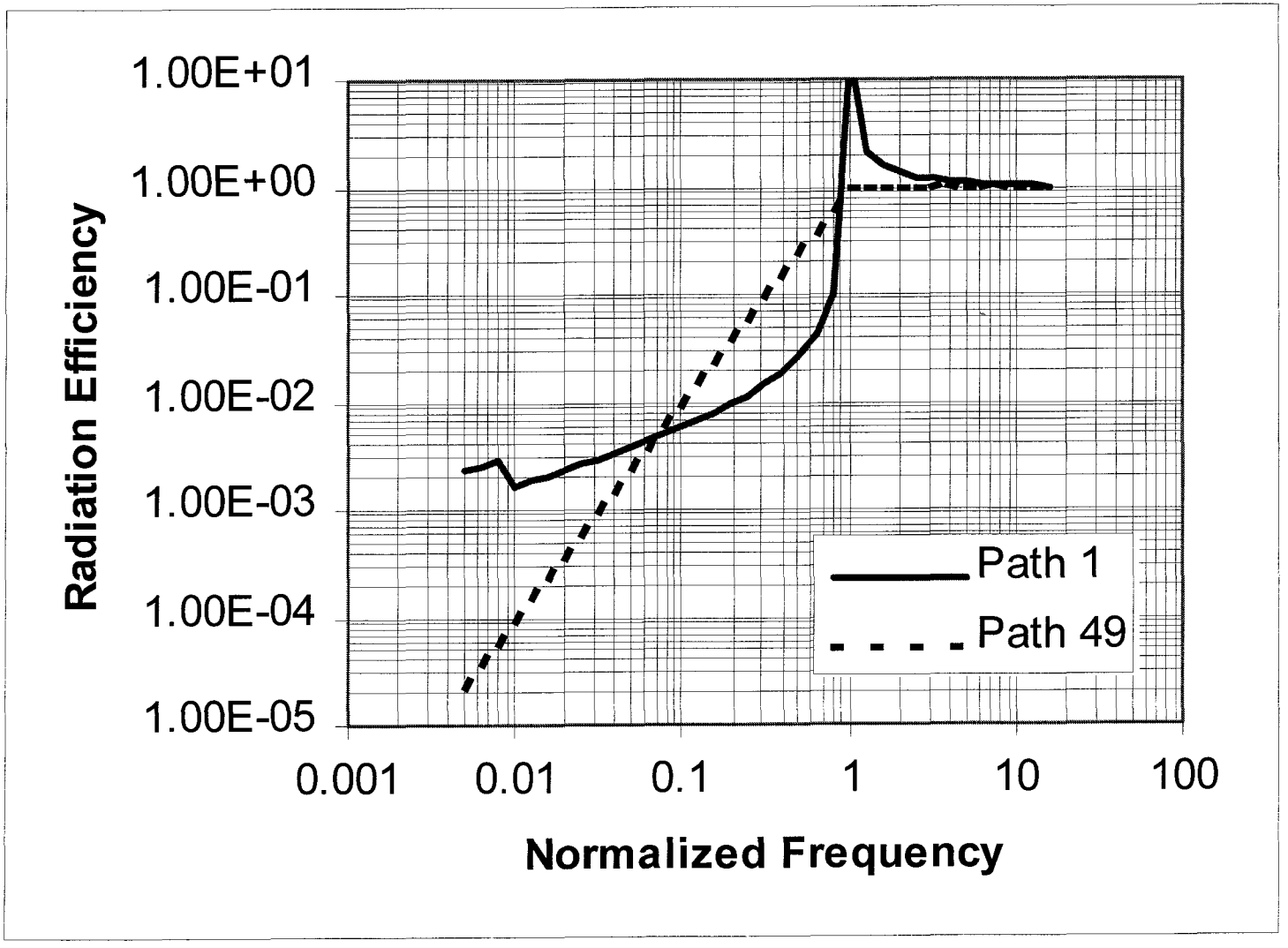

Bare Panel

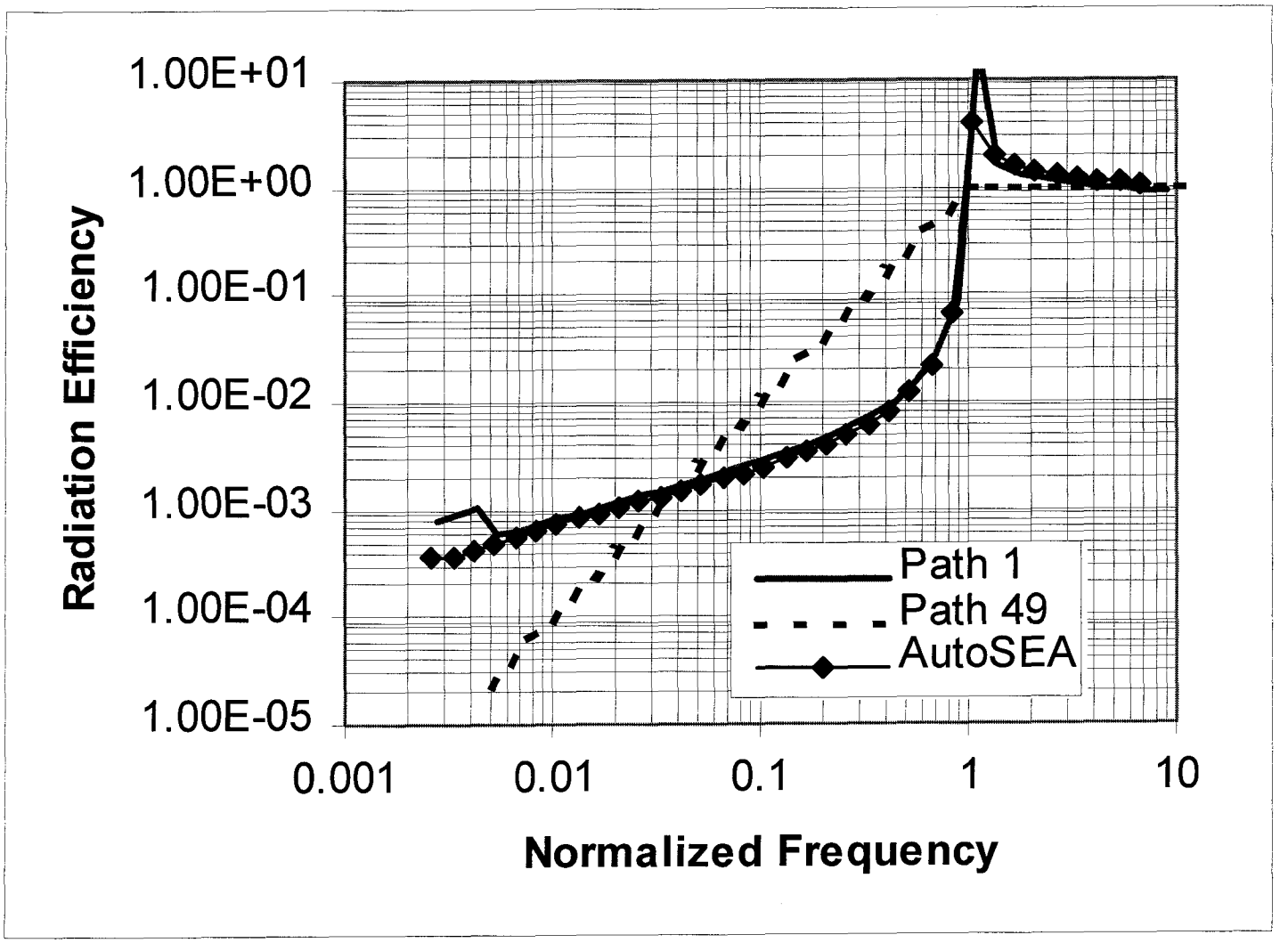
1.00E+01
1.00E+00
1.00E-01
1.00E-02
1.00E-03
1.00E-04
1.00E-05
Radiation Efficiency
0.001
0.01
0.1
1
10
Normalized Frequency
Path 1
Path 49
AutoSEA

Honeycomb Panel

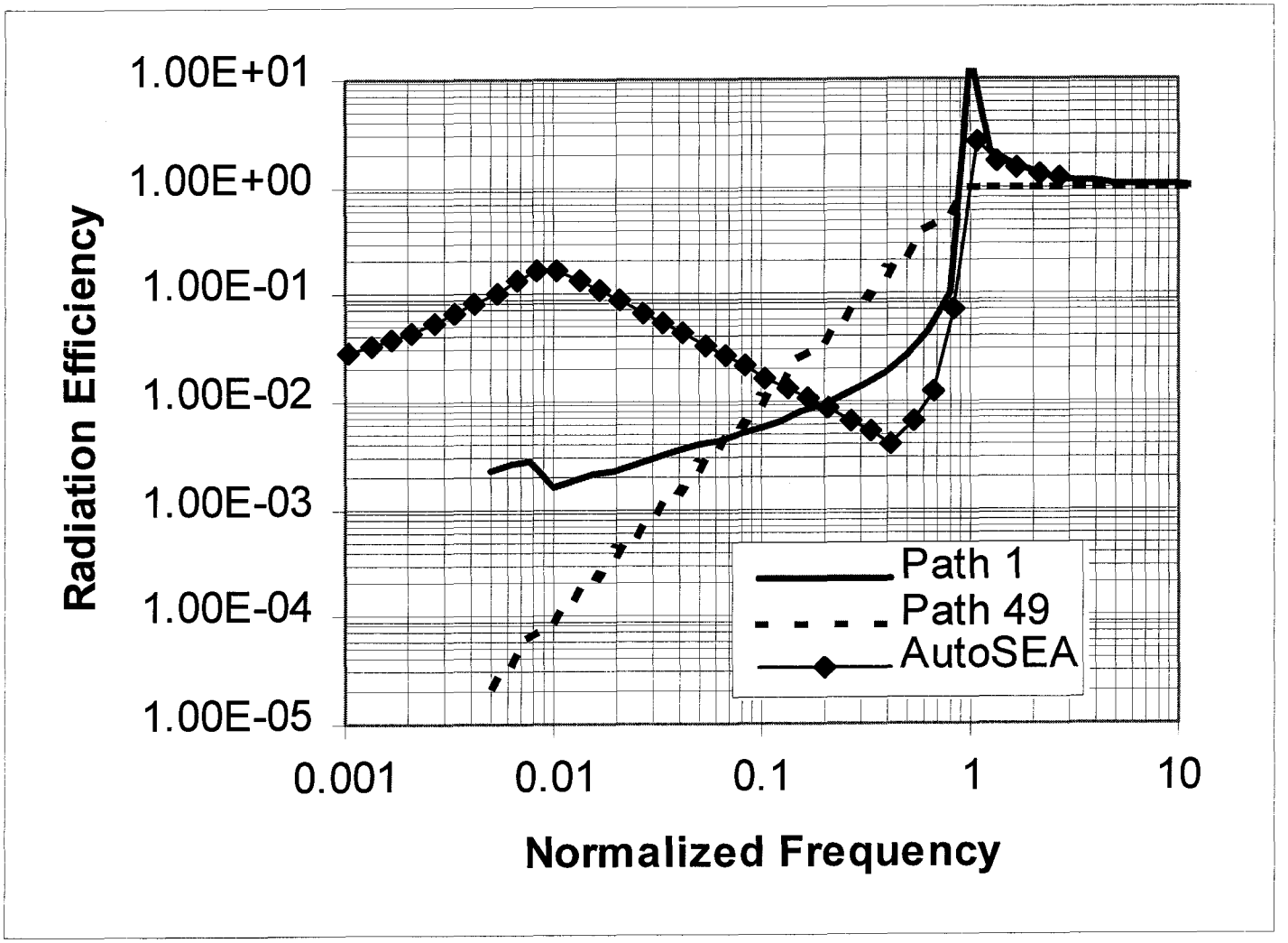

Ribbed Panel

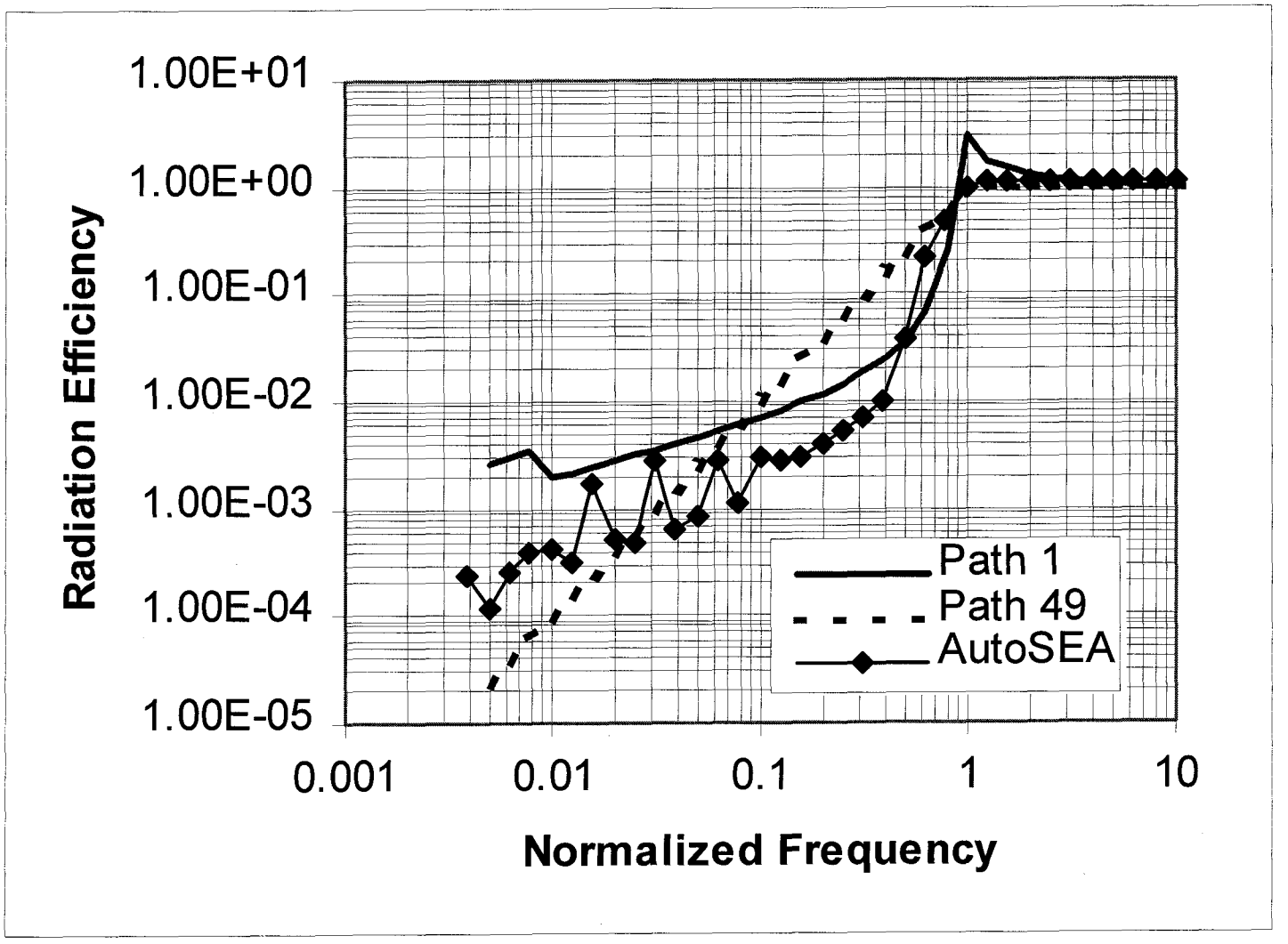

Observations on Radiation Efficiency

- Path 49 originally intended for mass-loaded honeycomb panels, now used for most panels
- Primarily concerned with low frequency region
- Significant mass-loading is typical
- Tend to have cylindrical and "small" structures (at 100 Hz)

Europa Orbiter

- Europa is one of the moons of Jupiter
- Recent measurements on Galileo show that the magnetic pole orientation on Europa shifts -- possible indication of a liquid ocean under the icy crust
- Europa Orbiter will help investigate this possibility

Europa Orbiter (EO)

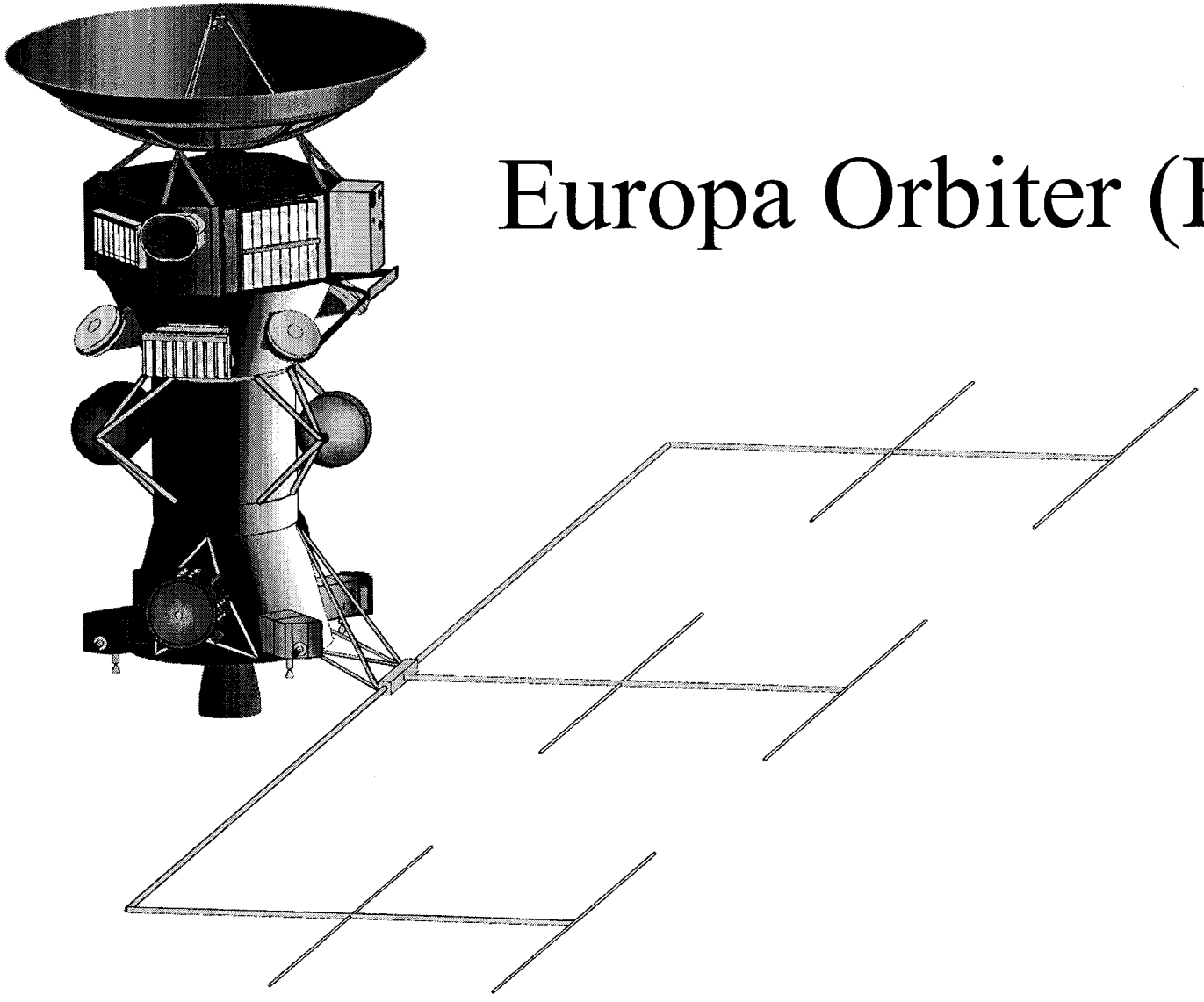

VAPEPS Model

1 - Acoustic Space
10 - Plates
4 - Cylinders
2 - Cones
6 - Rectangular Beams
9 - Tubular Beams
32 SEA Subsystems

Structural Mass - 324 kg
Non-structural Mass - 1225 kg

FEA Model

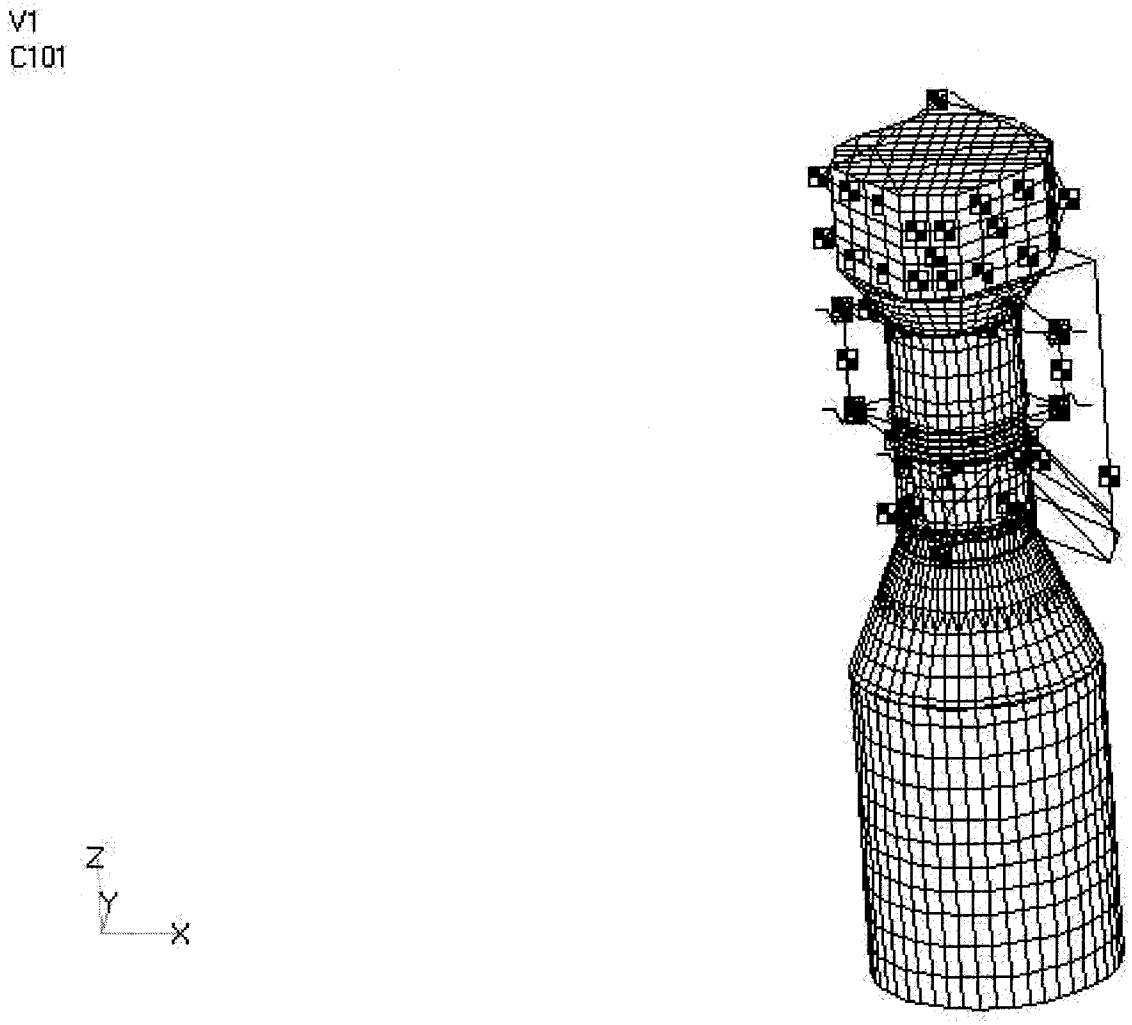

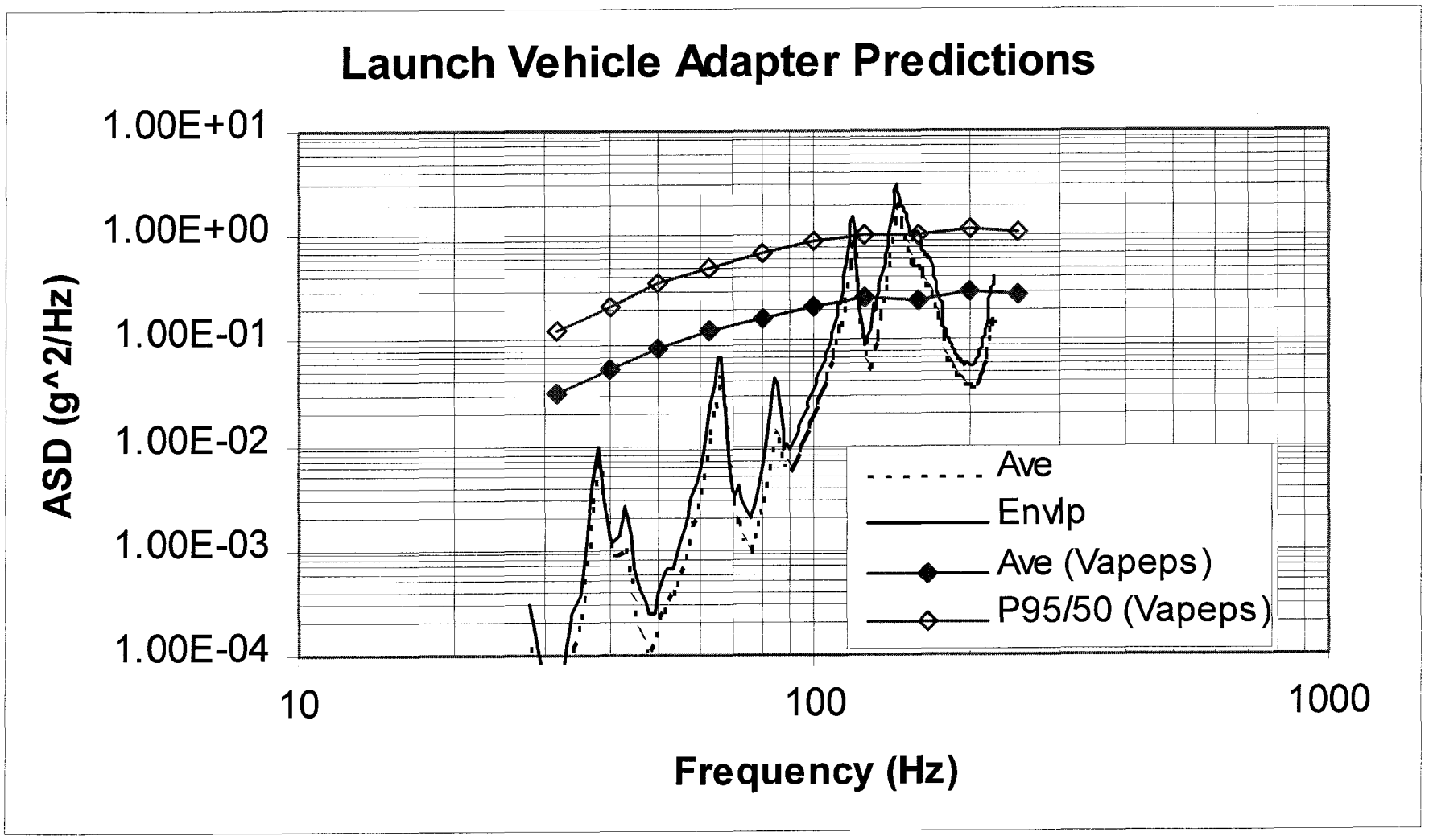
Launch Vehicle Adapter Predictions
1.00E+01
1.00E+00
1.00E-01
1.00E-02
1.00E-03
1.00E-04
ASD (g^2/Hz)
10
100
1000
Frequency (Hz)
Ave
Envlp
Ave (Vapeps)
P95/50 (Vapeps)

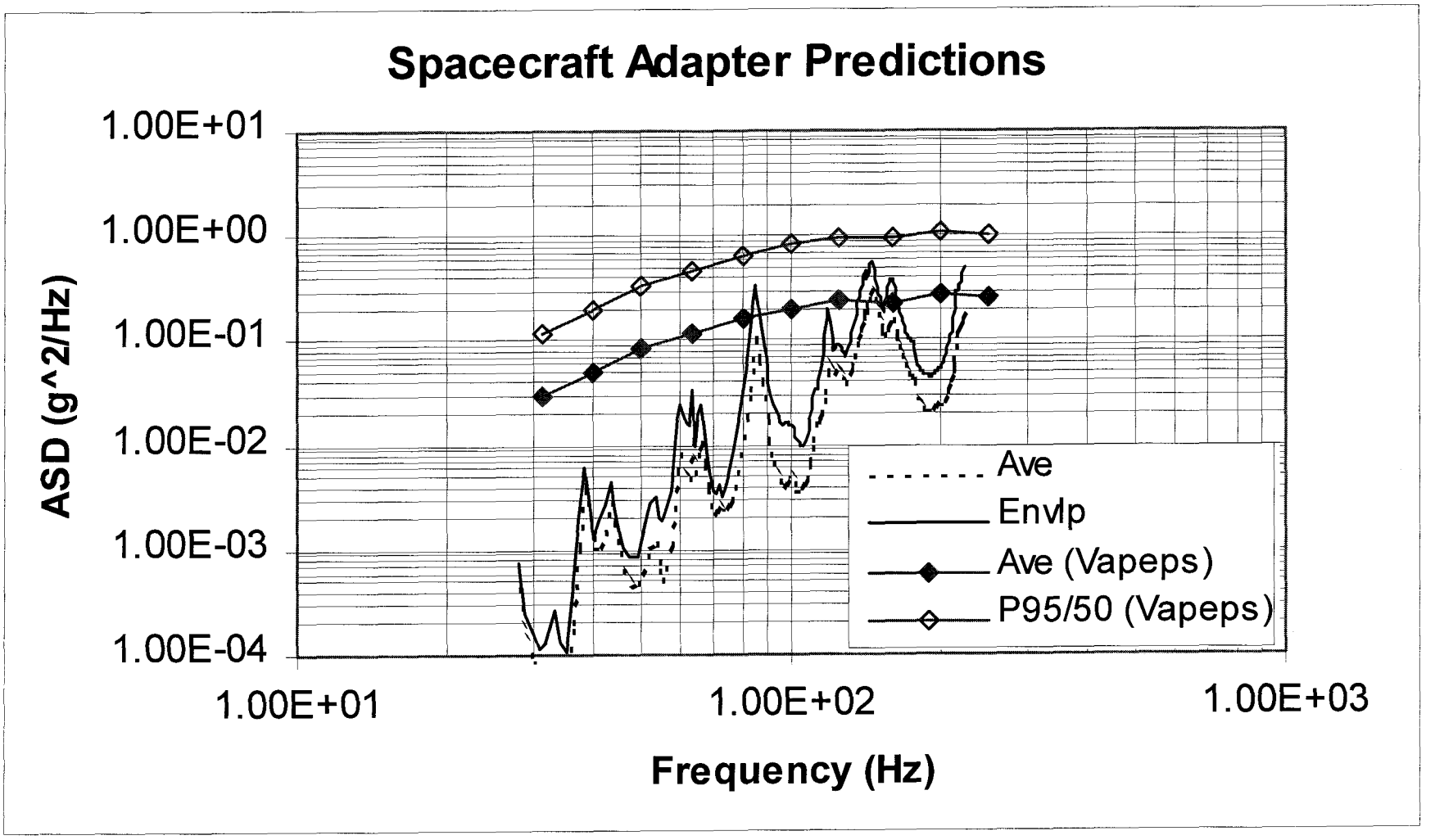
Spacecraft Adapter Predictions
1.00E+01
1.00E+00
1.00E-01
1.00E-02
1.00E-03
1.00E-04
ASD (g^2/Hz)
1.00E+01
1.00E+02
1.00E+03
Frequency (Hz)
Ave
Envlp
Ave (Vapeps)
P95/50 (Vapeps)

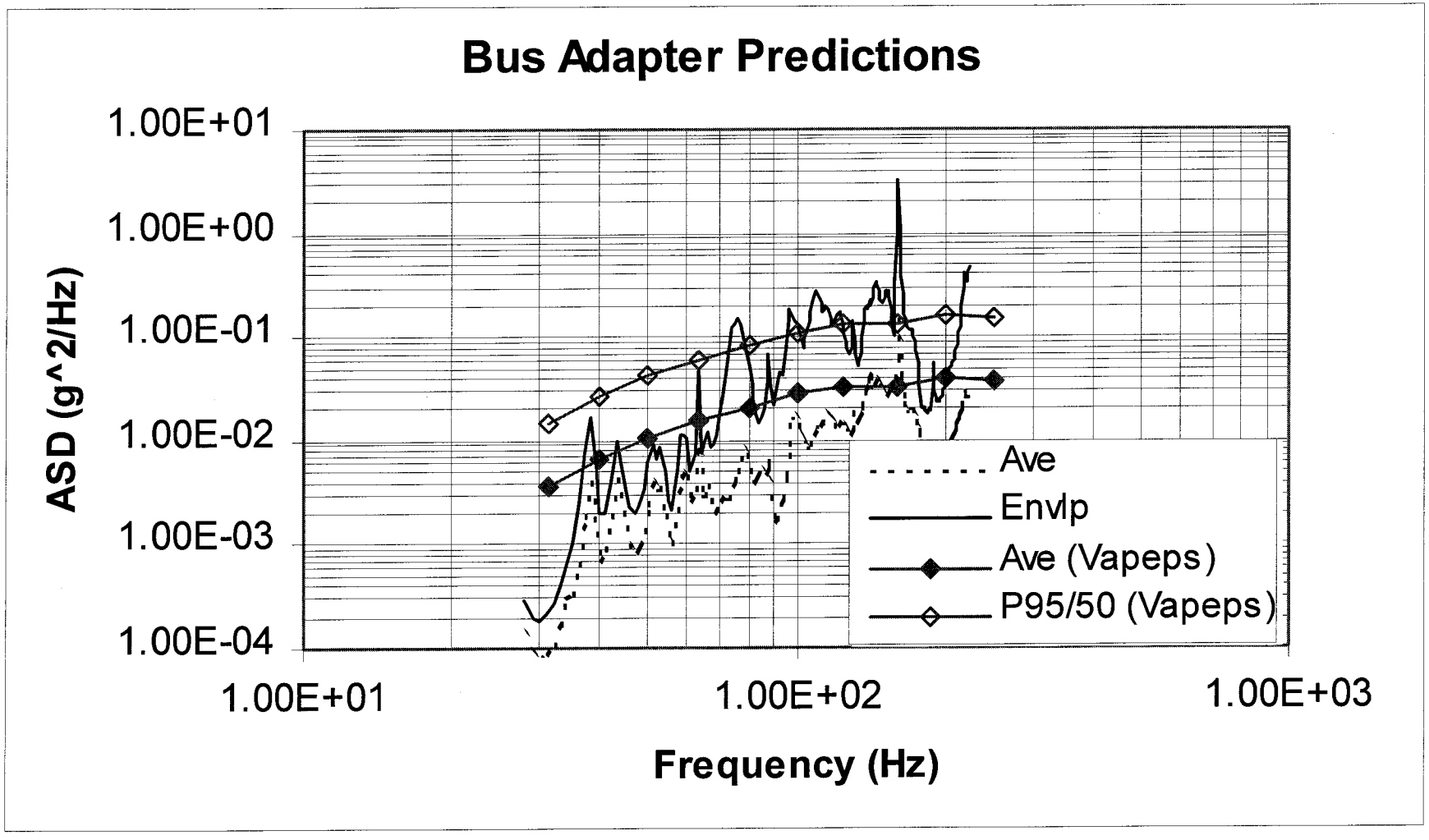
Bus Adapter Predictions
1.00E+01
1.00E+00
1.00E-01
1.00E-02
1.00E-03
1.00E-04
ASD (g^2/Hz)
1.00E+01
1.00E+02
1.00E+03
Frequency (Hz)
Ave
Envlp
Ave (Vapeps)
P95/50 (Vapeps)

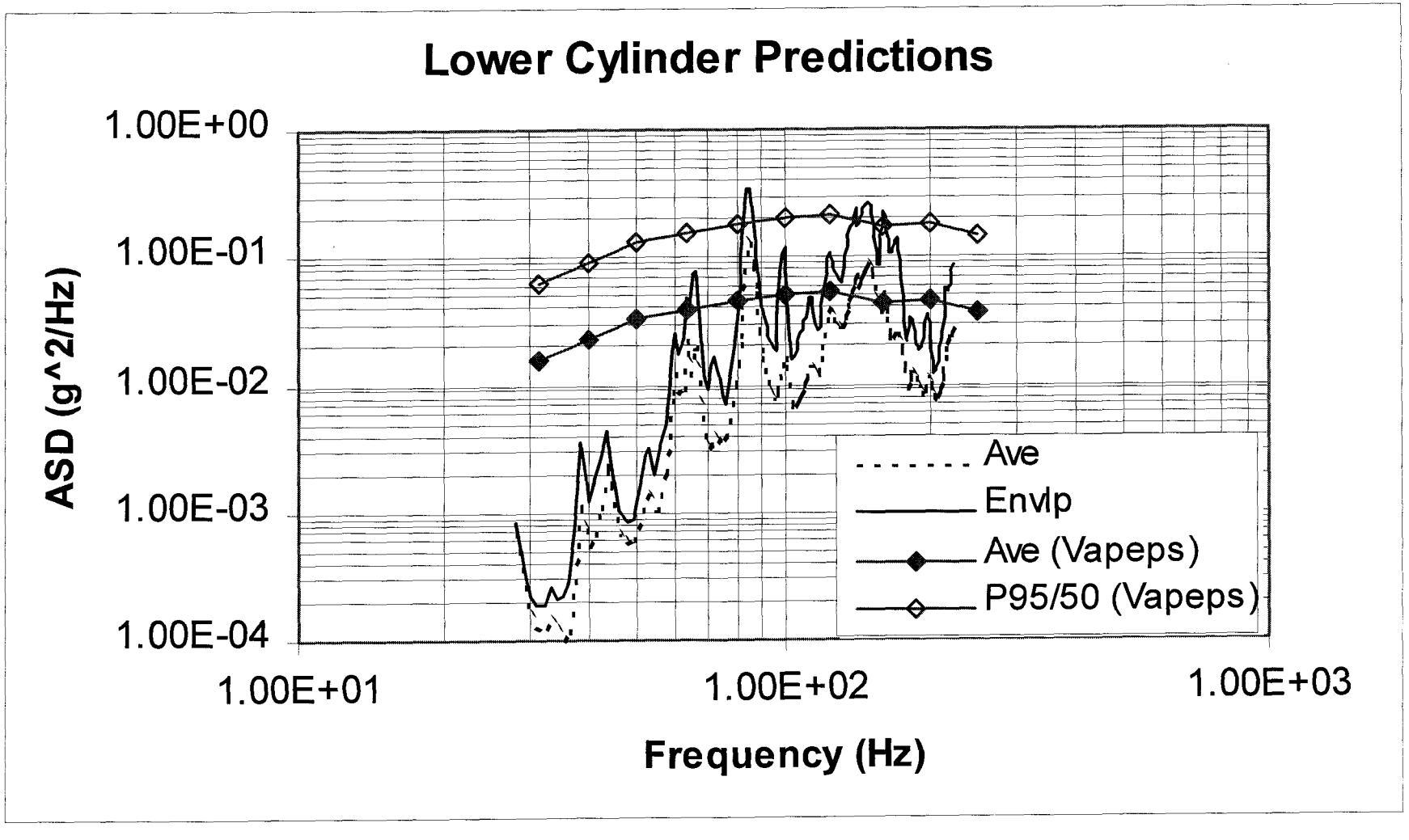
Lower Cylinder Predictions
1.00E+00
1.00E-01
1.00E-02
1.00E-03
1.00E-04
ASD (g^2/Hz)
1.00E+01
1.00E+02
1.00E+03
Frequency (Hz)
Ave
Envlp
Ave (Vapeps)
P95/50 (Vapeps)

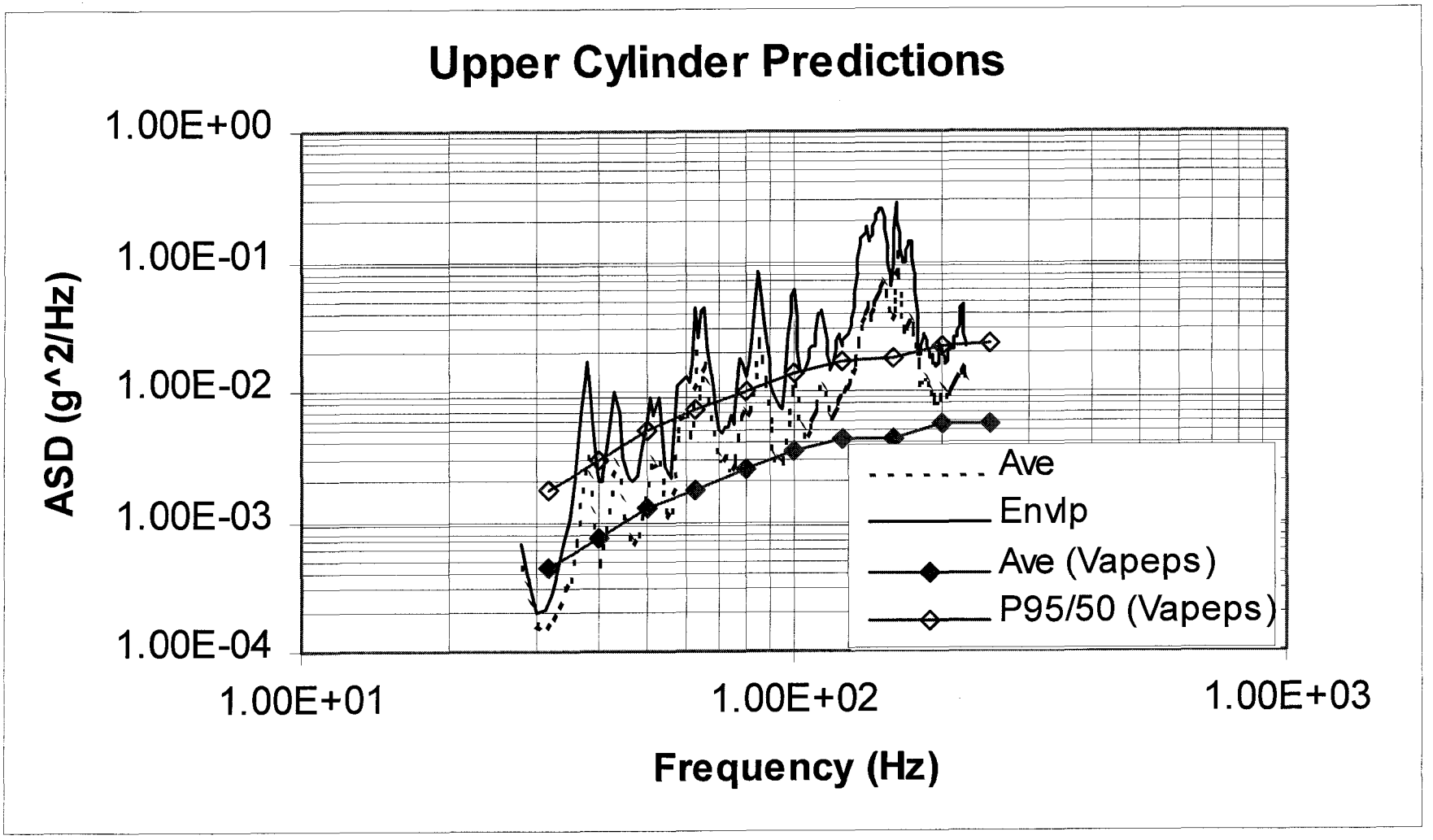
Upper Cylinder Predictions
1.00E+00
1.00E-01
1.00E-02
1.00E-03
1.00E-04
ASD (g^2/Hz)
1.00E+01
1.00E+02
1.00E+03
Frequency (Hz)
Ave
Envlp
Ave (Vapeps)
P95/50 (Vapeps)

BEA Model

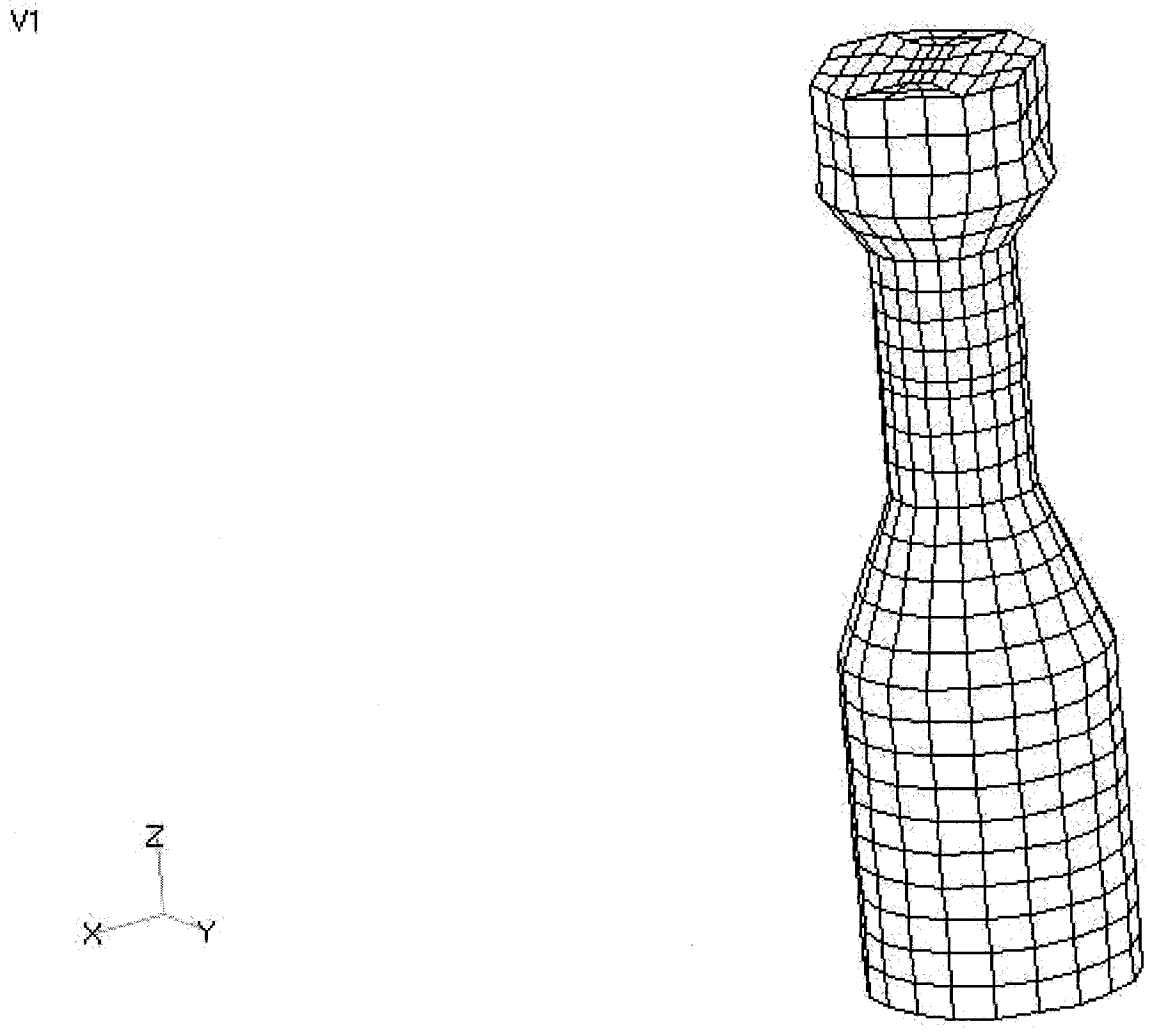

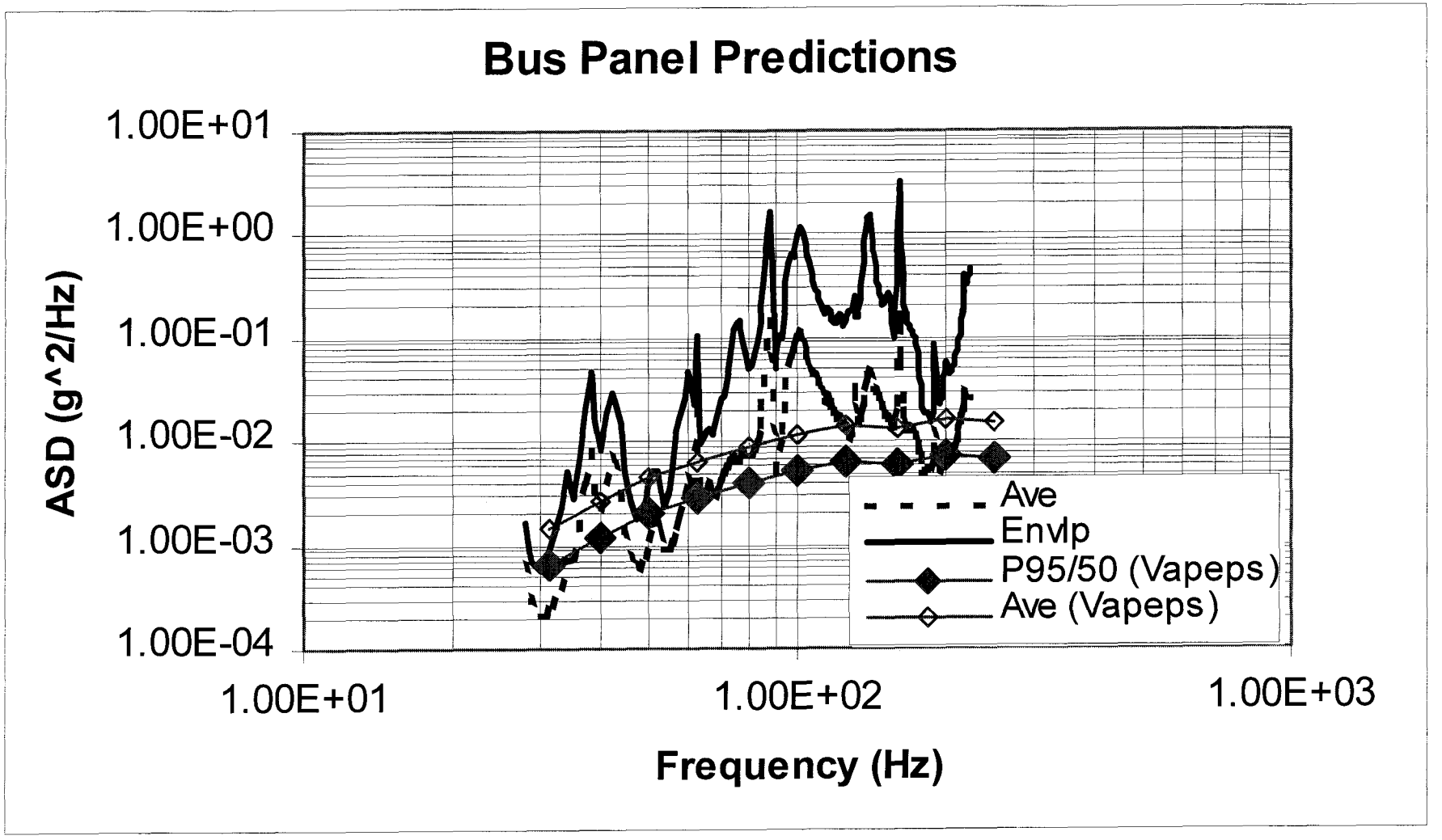
Bus Panel Predictions
1.00E+01
1.00E+00
1.00E-01
1.00E-02
1.00E-03
1.00E-04
ASD (g^2/Hz)
1.00E+01
1.00E+02
1.00E+03
Frequency (Hz)
Ave
Envlp
P95/50 (Vapeps)
Ave (Vapeps)

Conclusions

- VAPEPS Path 49 Radiation Efficiency curve is effective for mass-loaded panels
- SEA and BEA/FEA results compare favorably
- Hard to make direct comparisons between the different numerical techniques
- Using both low- and high-frequency tools in the mid-frequency region gives more confidence in the analysis