A High Frame Rate CCD Camera with Region-of-Interest Capability

Steve P. Monacos, Angel A. Portillo, William Liu, James W. Alexander, Gerardo G. Ortiz
Jet Propulsion Laboratory
California Institute of Technology
4800 Oak Grove Drive
Pasadena, CA 91109-8099, MS 300-123
818-354-9161
Steve.P.Monacos@jpl.nasa.gov

Abstract – This paper presents the design and preliminary results of a custom high-speed CCD camera utilizing a Texas Instruments TC237 CCD imager chip with sub-frame window read out. The camera interfaces to a C40 digital signal processor (DSP), which is used to issue commands and read images from the camera. The camera design consists of a two-card set including the CCD imager card and the focal plane array (FPA) interface card. The CCD imager card contains the level translator and buffer circuitry for the CCD strobe lines, the TC237 CCD imager chip and a pair of analog signal processor chips, each with a 10-bit analog-to-digital converter. The analog signal processor is a TLV987 with correlated double sampling (CDS) and serial programming capability to set amplifier gain, pixel bias level and background level illumination to name a few. The second card contains a pair of field programmable gate arrays (FPGA) used to interface the CCD imager card to the C40. The goal of this camera development is to provide a high-quality, high-speed camera as part of the tracking apparatus for a free-space optical communications terminal. Preliminary data suggests frame rates of 6KHz for 8x8 sub-windows in the current testbed with 7-bit pixel resolution. Refinements in camera and testbed operation target performance goals of 17KHz for 8x8 sub-windows with 10-bit pixel resolution.

Table of Contents -

1. INTRODUCTION
2. TESTBED SETUP
3. TC237 CAMERA DESIGN
   3.1 TC237 CCD Card
   3.2 FPA Interface Card
4. SOFTWARE CONTROL
   4.1 C40 DSP Software Commands
5. TIMING DETAILS AND IMAGING FOR SUB-WINDOW READOUT
   5.1 Timing Parameters
   5.2 Calculated Readout Timing for Two Sub-Windows
   5.3 Preliminary Results for a Single Sub-Window
6. CONCLUSIONS

0-7803-6599-2/01/$10.00 © 2001 IEEE

1. INTRODUCTION

Implementation of a free-space optical communications link requires a tracking apparatus to acquire and track an incoming laser beacon for reliable link operation. The pointing accuracy of the tracking apparatus is determined by link parameters including the required link bit rate and bit error rate (BER), link geometry, transmission media and beacon characteristics to name a few [1]. To achieve the necessary pointing accuracy requires a camera capable of region-of-interest (i.e. sub-window) read out rates up to several Kilo Hertz with greater than eight bits of resolution per pixel [1].

Commercially available cameras are well suited to applications requiring full-frame, large form factor video streams or sub-window readout for still-frame image capture. Commercial cameras are not designed for the combination of single frame and high-speed streaming video with sub-window image capture and greater than eight bits of resolution per pixel. Development of a custom camera fills this void.

The remainder of this paper is organized as follows. Section 2 describes the testbed used to debug camera operation and collect data for preliminary analysis. Section 3 describes detailed camera design and operation. Section 4 details the software control for the camera. Section 5 discusses sub-window timing details and preliminary results of images taken by the camera. Section 6 provides concluding remarks and a road map of additional activities to enhance camera performance.

2. TESTBED SETUP

The testbed used to evaluate camera operation and performance is shown in Fig 1. This configuration includes two processors and the custom electronics consisting of the global bus interface logic and the TC237 CCD camera. The global bus interface contains the logic for the address decoder, handshake mechanism and data path buffers to access the camera via the global bus port of the C40 processor. The CCD camera receives and acknowledges

commands from the C40 and returns pixel data when so requested.

The PC host runs a graphical user interface used to send commands and receive telemetry from the C40. This communication is via the ISA bus of the host PC. The PC host is not directly involved in the real-time command and control of the CCD camera.

This testbed is part of a legacy system used for demonstrating acquisition and tracking of a laser beacon for a free-space optical communications terminal. The camera design was functionally split into an interface card and CCD card. This configuration allows for rapid evaluation of the CCD card in the legacy system by designing the CCD interface card to adhere to the existing camera interface. Insertion of the CCD camera into a next-generation acquisition and tracking platform will allow for increased throughput by leveraging the CCD card with an enhanced design of the current FPA interface card.

connections for the card. The CCD card includes regulator circuitry, level translators and buffers, a TC237 imager and two TLV987 signal processors to provide TTL compatibility for all input and output signals on the card. The TC237 CCD sensor and TLV987 signal processors are the primary components of the CCD card.

The TC237 is a CCD imager with an image area of 680 pixels per line and 500 lines [3]. The active image area of the CCD is 658 pixels per line and 496 lines and contains all exposed pixels during scene capture [3]. There are additionally 22 pixels per line and four additional lines of dark pixels, which make up the remainder of the image area and are used for background level calibration [3].

Operation of the imager requires transferring the charge from the image area to the storage area of the device [3], [4]. Readout of the pixel data is accomplished by a parallel load of a line of pixel data into one of the shift registers and serially clocking the pixels out [3], [4]. Two lines of pixels

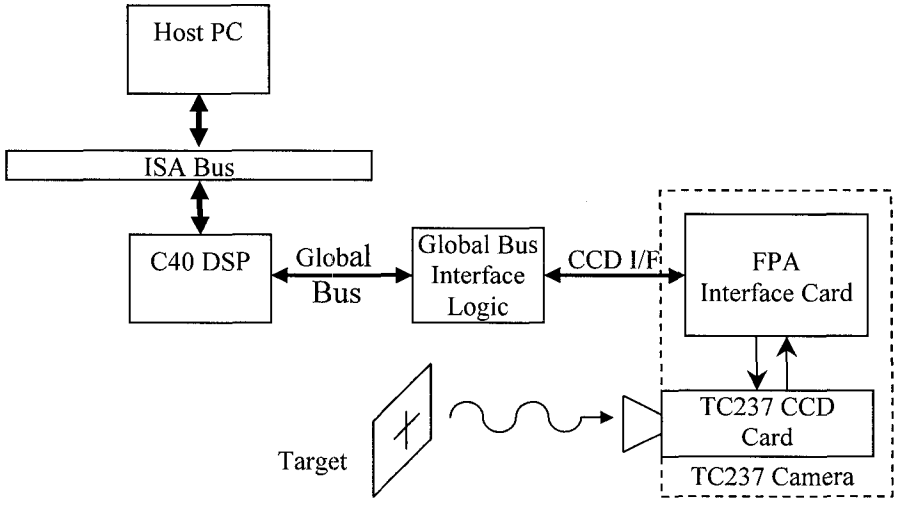

Figure 1 – TC237 testbed.

3. TC237 CAMERA DESIGN

The CCD camera consists of the FPA interface card and TC237 CCD card as shown in Fig. 1 above. This organization allows for optimizing the CCD card while maintaining a flexible architecture for communicating with the camera.

The current design of the camera is release 1.0 and is defined in [2]. This version of the camera outputs one serial pixel stream of width eight bits per pixel. Release 2.0 of the camera is the next major release. It will output two simultaneous pixel streams of 10 bits width per pixel to double the achievable pixel output rate and increase the dynamic range per pixel while maintaining the same system clock rate for the TC237. This paper focuses on the details of release 1.0.

3.1 *TC237 CCD Card* - Figure 2 is a detailed block diagram of the TC237 CCD card and shows the interface

can be read out simultaneously by performing two shift register load operations before beginning serial read out [3], [4].

The TLV987 is a user programmable signal processor specifically designed for accepting and processing analog CCD pixel data and generating a 10-bit binary representation of the filtered data [5]. The internal registers of the device come up in a default configuration after power up or a reset operation [5]. The device operation can be customized by over writing the default values in these registers via a three-wire serial interface as described in [5].

The CCD card has a total of eight power planes. The TC237 and associated driver circuitry requires one analog and four digital power planes. The TLV987 requires one analog plane and two digital planes. These planes are powered by +7 volt and +25 volt supplies. The CCD card has the option to use one each of these supplies or two +7 volt and two +25

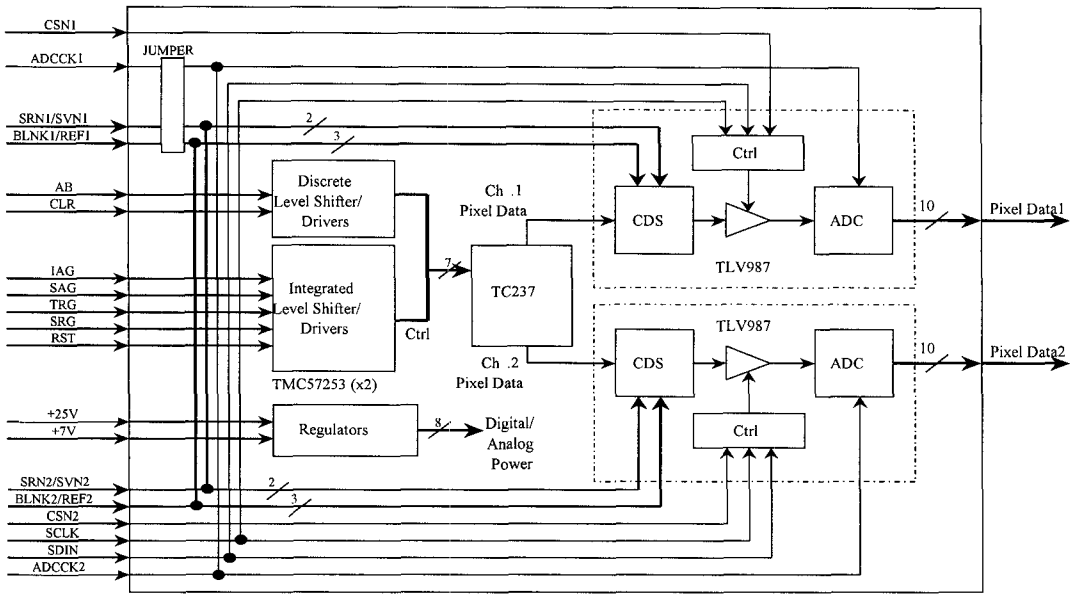

Figure 2 - TC237 CCD Board

volt supplies to power the analog and digital power planes from separate supplies. The card is currently powered by single +7 volt and +25 volt supplies.

The CCD card requires two ground planes for the digital and analog grounds of the TLV987. The TC237 substrate is connected to the analog ground plane. Interconnection of the digital and analog ground planes is via a low resistance, 220uH inductor. A design option was also put into place for direct connection of these ground planes should the default configuration result in noisy pixel data.

Operation of the CCD card requires supplying the various strobe signals to the TC237 imager as described in [3], [4]. There are four basic operations which can be performed: refresh; image area clear; parallel load from the storage area to a shift register; and serial shift out of the data. The first two operations are combined into a single operation in release 1.0, where the refresh operation is immediately followed by the image area clear. The last two operations can be used in combination to scroll through lines of the image and read out lines of interest. This functionality allows for viewing regions of interest while minimizing the time needed to reach the region of interest.

The TLV987 is an analog signal processor with a 10-bit analog-to-digital converter (ADC) at the output. It has a total of nine registers for customizing device operation [5]. With the exception of the gain block, the TLV987 is used in the default mode as described in [5]. Preliminary test results presented in section 5 used a gain of approximately 6 dB for the gain block.

3.2 *FPA Interface Card* -This section describes the interface between the TC237 camera and the global bus interface logic. This functionality is implemented in the FPA interface card. Figure 3 shows a block diagram of this card and its associated control and data lines.

In release 1.0, the FPA interface card consists of two Lattice 1048E FPGAs, which are used to provide timing and control signals to the TC237 and TLV987s and read back digitized pixel data from one of the TLV987s. The two FPGAs are organized as an outbound controller for TC237 timing and control and TLV987 programming, and an inbound controller for TLV987 timing and pixel read back.

Operation of the camera is accomplished by two different mechanisms. The first is a memory write operation by the C40 DSP and is used to download commands to the camera. Commands can be used to perform an immediate action or to initialize registers in the CCD camera. The second mechanism is a request-acknowledge handshake used to perform an immediate action with the camera. The action is initiated by a request strobe from the C40 followed by an acknowledge strobe from the FPA interface card. The subsequent action is defined by the state of the interface card from a "power on reset" or from a command(s) sent to the card after power up.

The outbound controller logic includes a command interpreter, line and column counters and CCD control logic. The command interpreter is a finite state machine used to field commands from the C40 DSP. The command interpreter is architecturally defined to allow for two, four and six byte commands. Two-byte commands perform immediate actions. Four-byte commands are used to initialize registers in the FPA interface card. Six-byte commands are used to load registers in the TLV987s on the CCD card. Only two-byte commands are used in release 1.0. Four and six-byte commands will be implemented in release 2.0.

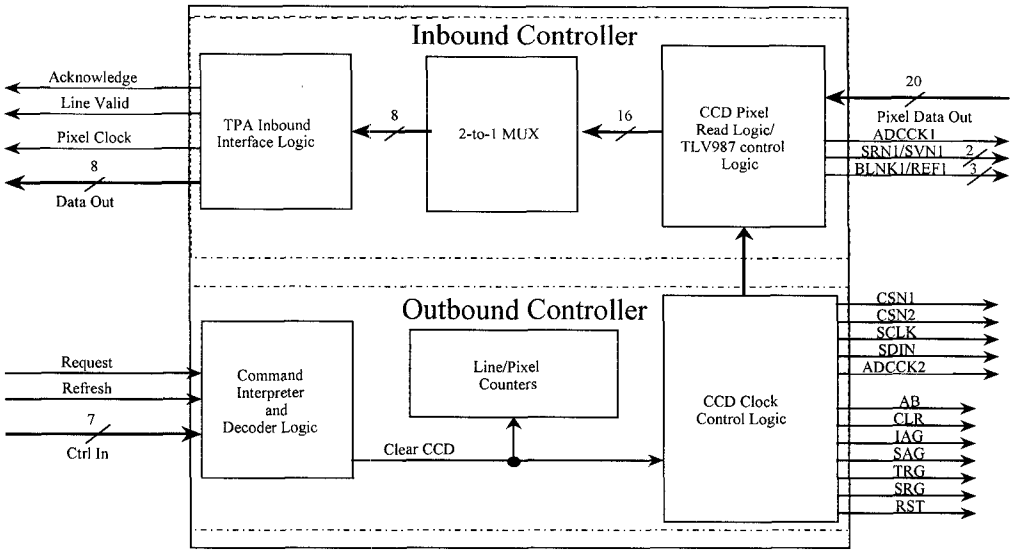

Figure 3 - FPA Interface Card

In release 1.0, the only command allowed is to assert or negate a refresh flag used to implement a refresh operation in the CCD. A refresh is defined as transferring all 500 lines of pixel data from the image area in the TC237 to the storage area of the CCD [4]. Upon completion of this transfer, a clear pulse is automatically applied to the image area of the CCD to remove any residual charge. This operation requires sending a command to assert the refresh flag followed by issuing a request to the camera.

Line dump and pixel readout operations require sending a command to negate the refresh flag followed by a request to the camera. A line dump operation is distinguished from a pixel readout operation by the timing of the next request pulse after acknowledgement for the current request. If the next request occurs within one micro-second after acknowledgement, then the current line will be dumped. If the next request occurs beyond one micro-second, then some or all of the current line will be sent out serially. A line readout in progress can be terminated before the end of the line by asserting the request line if no additional pixel data is required.

When a line of pixels is being read out from the CCD, the inbound controller is used to provide timing signals for operation of the TLV987 signal processor. The inbound controller operates the strobe lines for the correlated double sampler (CDS) in the TLV987. The inbound controller additionally provides timing signals for background level sampling, the blanking period of a line and the clock for the TLV987 internal 10-bit ADC.

This controller has a 10-bit data path for the ADC output of each of the TLV987s. Release 1.0 of this controller discards the digitized pixel data from one of the TLV987s. The two least significant bits of the digitized pixel data from the second TLV987 are also discarded. The eight most significant bits of the pixel data, a line valid signal and a pixel clock are supplied to the global bus interface logic in Fig. 1. The global bus interface logic stores the pixel data in a first-in-first-out (FIFO) buffer, which is subsequently read by the C40 DSP.

4. Software Control

Operator control of the CCD camera is via two software processes running on two processors. These processors are shown in Fig. 4 as the host PC and C40 DSP. The host PC runs the graphical user interface (GUI) and allows the user to command the C40 to access and operate the TC237 CCD card and FPA interface card. The DSP software contains the CCD driver code used to perform refresh, line dump and line readout operations as described in section 3.2.

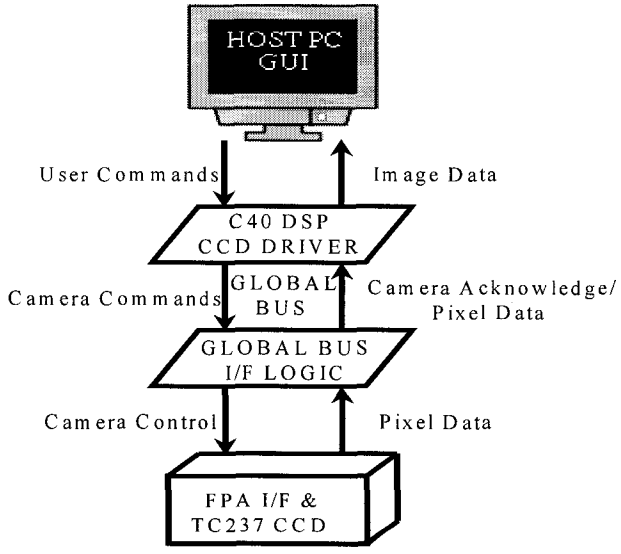

Figure 4 – TC237 CCD Camera Software Architecture

Commands to the TC237 CCD camera are via the global bus of the C40 DSP. The CCD camera responds by sending pixel data back to the DSP software. The GUI software then

collects all image data in a predefined file format for off-line processing.

The GUI and C40 software perform three basic operations in sequence to readout sub-windowed images from TC237 Camera. These operations consist of refresh, sub-window pixel readout, and image storage. A refresh operation moves the exposed pixels in the CCD image area to the storage area of the CCD for pixel readout. The sub-window readout operation reads out the individual windows from the camera by scrolling and dumping unwanted lines, and indexing over unwanted pixels within lines of interest one line at a time. The image storage operation stores the sub-window pixels of interest into memory on the DSP card.

4.1 *C40 DSP Software Commands* - Release 1.0 of the software supports frame rate control, image-logging capabilities, and selection of window size and location for up to two sub-windows. Frame rate control is implemented by a single programmable timer interrupt to initiate the sequence of operations discussed below. The image logging and window parameter control functions are implemented as interrupt driven processes. The interrupt is generated by the CCD camera after a refresh operation and is fielded by the C40 DSP driver.

There are several low-level commands in the repertoire of the C40 driver used to implement the above functions: refresh, line dump, line scroll and column index. These operations are facilitated with a memory-mapped register in the global bus interface logic in Fig. 1 called the CCD read-write register. A C40 write to this register generates a request to the camera. A C40 read from this register reads out a pixel from a first-in-first-out (FIFO) buffer, which stores CCD pixel data until the C40 can retrieve it.

The refresh command sets the FPA interface to a non-readout mode by setting the refresh flag in the FPA interface. The C40 initiates a transfer of the exposed pixels to the CCD storage area by writing to the CCD read-write register in the global bus interface logic. No pixel data is read back by the C40 for this command.

The line dump command transfers a line of pixels from the CCD storage area to the serial shift register of the CCD. This command clears the current shift register contents and places a new line of pixel data into the CCD shift register. The timing of the next write command to the CCD read-write register, as detailed in section 3.2, determines whether a line dump command has been requested.

The scroll command is a higher level function used to scroll through unwanted lines of pixels. One or more line dump commands are issued to the FPA interface until the line of interest is reached. This command stops one line prior to the first line in the sub-window.

The column index command performs pixel indexing so that only the pixels within the sub-window are passed, on a per line basis, from the CCD serial shift register to the FIFO and C40. The pixels indexed are read out of the CCD shift register but are not stored in the FIFO. For this command the CCD read-write register is set to the integer number of pixels that will be indexed or dumped by the C40 Software. The integer value is then used by the global bus interface logic for pixel indexing.

Window readout is another higher level command and is performed by using the scroll and column index commands to reach the sub-window, then transfer the desired pixels from the storage area in the CCD to C40 memory. The global bus interface transfers full lines of pixels, one line at a time, to the FIFO in the global bus interface. The C40 software reads out the sub-window pixels on a per line basis for each window.

Pixel readout from the CCD storage area is performed for the two-window case as follows. First scroll to the line location of the top of the first window. Command the camera to load a new line of pixels into the global bus interface data buffer. Index over to the first pixel of the first window using the column index command. Readout the first line of pixels for the first window from the data buffer and store it to C40 memory. Repeat these steps until all pixels for the first window have been stored. Scroll to the top of second window and repeat these steps until all pixels for the second window have been stored. The overlapping of window coordinates are not allowed in release 1.0 of the software.

Exposure Control defines the amount of time the CCD image area spends collecting charge for a particular image. The existing setup begins exposing the next frame when the refresh command has completed. The Camera continually exposes the image area of the CCD at the frame update rate and transfers the exposed pixels to the storage area. This was done to prevent excess charge build up on the exposed pixel area on the CCD Sensor.

The refresh command is performed once every frame update time and results in an exposure time which is approximately equivalent to the frame update time. Better exposure control is not possible with the current testbed. Release 2.0 will allow exposure lengths independent of frame rate. This version of the software will have additional support for the TC237 CCD such as reading and writing to the FPA interface card registers to name a few.

The CCD driver software implements two important functions for characterization of the camera known as take image and frame transfer. The take image function allows the user to take continuous still images by performing multiple frame transfers, pixel readout, and storage commands. The images are then displayed on the host PC screen as 8-bit gray-level bit map images. The take image feature allows diagnostic capability during scene setups. The frame transfer function allows real-time gathering of CCD pixel data at programmable frame rates. Data output is

stored in an ASCII text file.

5. Timing Details and Imaging for Sub-Window Readout

Read out of a sub-window consists of three fundamental operations. They include a refresh operation, scrolling through the image until the sub-window is reached and reading the pixels which are in the sub-window. The time required to read out a sub-window is defined as the sum of the refresh time, the scroll time and the window read time.

The request and acknowledge signals, discussed in section 3.2, are used to initiate the three operations for frame read out as shown in Fig. 5. The signal, ABSP, is a flag generated by the FPA interface card to perform a refresh operation. It denotes the duration of the refresh operation. The scroll time is dependent on the request-acknowledge cycle time and the number of lines to be scrolled. The window read time is additionally dependent on the horizontal location and size of the sub-window within the field of view (FOV) [2].

First Window Scroll Time – time required to scroll to the storage area of the first line of the first window

Inter-Window Scroll Time – time required to scroll to the storage area of the first line of the second window

Row Read Time First Window – time required to read one line of pixel data for the first window

Window Read Time Second Window – time required to read N lines of pixel data for the second window

Row Read Time Second Window – time required to read one line of pixel data for the second window

Window Read Time Second Window – time required to read N lines of pixel data for the second window

5.2 *Calculated Readout Timing for Two Sub-Windows* – This section presents calculated frame rates for two sub-windows. Table 1 displays calculated window frame rates for two sub-windows within the selected regions of the

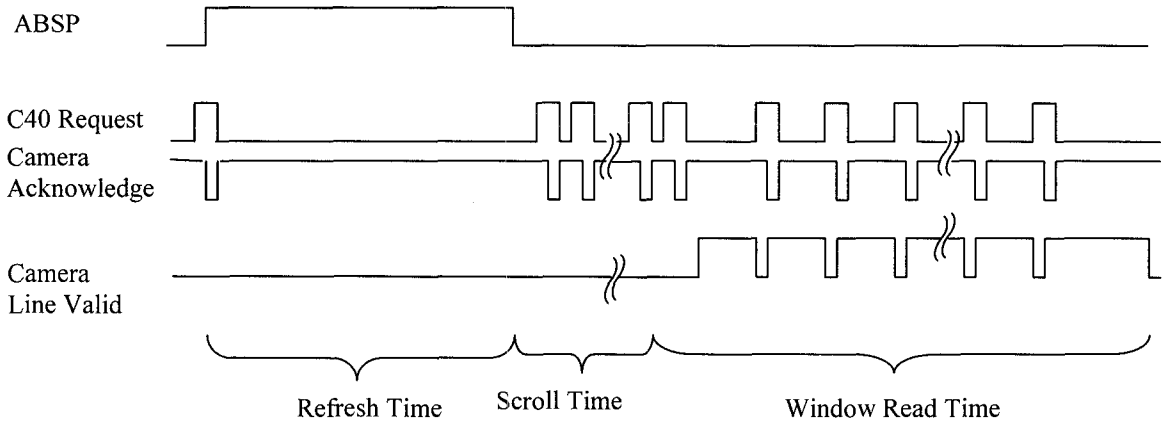

Figure 5 – Sub-window Read Out Timing

Image integration time is accounted as follows. Image integration begins with the image area clear pulse and ends with the onset of the refresh operation. The integration time is the reciprocal of the frame rate minus the refresh time. By setting the integration time equal to the sum of the scroll plus window read times, we define the maximum frame rate for given scroll and window read times.

5.1 *Timing Parameters* - The time required to read two NxN sub-windows out of the CCD is defined by the time needed to scroll through unwanted lines and pixels and read pixels in the sub-window. N represents the number of pixels on a side of the sub-window. The parameters of interest are listed below.

Refresh Time – time to transfer the image area to the storage area in the TC237

TC237 FOV. The FOV is defined to include both imaging pixels and covered pixels, used for black level calibration, and is 680 pixels per line by 500 lines per frame [3].

The TC237 is assumed to operate at rates of 10 MHz or 20 MHz for both serial pixel output rate and line transfer rate during a refresh operation. The pixel readout rate from the FIFO buffer to the C40 is approximately 4 MHz for the legacy testbed.

The operating scenario is to extract two 8x8 sub-windows within a 128x128 region of the CCD FOV (columns 2 & 4) and two 8x8 sub-windows within a 256x256 region of the CCD FOV (columns 3 & 5). The 128x128 and 256x256 regions include the first line and column of pixels of the CCD FOV. Pixel read out begins with the first line and first column of the TC237 FOV.

Table 1: TC237 Readout Times for Two Sub-Windows

Readout Operation	128x128 10MHz pixel rate	256x256 10MHz pixel rate	128x128 20 MHz pixel rate	256x256 20 MHz pixel rate
Refresh Time (μS)	50	50	25	25
First Window Scroll Time (μS)	52	116	26	58
Inter-Window Scroll Time (μS)	2.5	2.5	1.3	1.3
Row Read Time First Window (μS)	13.8	26.6	7.9	14.3
Window Read time First Window (μS)	110.4	212.8	63.2	114.4
Row Read Time Second Window (μS)	13.8	26.6	7.9	14.3
Window Read Time Second Window (μS)	110.4	212.8	63.2	114.4
Frame time (μS)	325.3	594.1	178.7	313.1
Frames per Second	3075	1683	5596	3194

In this table, the refresh time is the time needed to transfer all 500 lines from the image area to the storage area. The scroll time is the time required to shift out unwanted lines from the CCD storage area until the first line of the first sub-window is reached. The inter-window scroll time is the time needed to scroll through lines between the last line of the first sub-window and the first line of the second sub-window. The row and window read times are the times required to read out a single row and all rows of a sub-window respectively. The frame rate is the reciprocal of the sum of the frame, scroll and window read times.

The sub-windows are vertically aligned and separated by five lines of pixels. For all cases, the sub-windows are constrained to be no closer than two pixels from the edge of the 128x128 or 256x256 regions. Within this constraint, the windows are located such that the maximum number line scroll and pixel dump operations are needed to reach the two sub-windows.

The total frame time is found by summing the refresh time, scroll times, and the time to read the two sub-windows. As can be seen from the last row in table 1, frame rates up to 3075 and 1683 frames per second are achievable using 10 MHz pixel and line transfer rates for 128x128 and 256x256 regions respectively. The 20 MHz pixel and line transfer rates produce frame rates of 5596 and 3194. The integration time for each case is found by subtracting the refresh time from the frame time.

5.3 *Preliminary Results for a Single Sub-Window* – Preliminary results indicate that the camera can read 8x8 sub-windows at a maximum frame rate of 6 KHz. This rate is for 10 MHz pixel and line transfer rates. The 8x8 sub-window is positioned in the second line and column of the CCD FOV.

Table 2 illustrates three scenarios for camera operation and the achievable frame rates for these cases. The integration time is as defined above. All three cases assume only one sub-window within the CCD FOV. The beginning of the sub-window is located at the second line and second column in the frame and is eight pixels across by eight pixels high. The imager system clock, which defines both the parallel line transfer rate and the serial pixel rate of the CCD, is 10 MHz or 15 MHz.

The first scenario defines the maximum theoretical frame rate for the camera with a 10 MHz imager system clock. These numbers are based on simulations of the FPA interface card logic and exhibit a frame rate of 17KHz. There is no overhead for the legacy testbed, shown in Fig. 1, for this case.

The second scenario is based on measured performance of the camera in the testbed. A 10 MHz imager system clock is also used for this case. As can be seen in table 2, an additional 300usec delay is incurred with respect to the theoretical case for a line request. The measured row read time is 14.5usec, which includes 1usec for a line request, 1usec for read out of pixels from the CCD and an additional 12.5usec to transfer the pixels across the global bus interface logic into C40 memory. The maximum achievable frame rate is 6KHz for this case.

The third scenario is targeted for release 2.0 of the camera and assumes a 15MHz imager system clock with simultaneous serial pixel data from both outputs of the TC237 CCD. The line request, scroll, row read and window read times include the over head for the legacy testbed as measured in the second scenario. These times are smaller compared to the second scenario because of the higher clock speed and dual pixel readout for this case. As table 2 shows, this scenario can achieve greater than 11 KHz frame rates for a 50% increase in the system clock.

The minimum frame rate for an 8x8 sub-window within a 256x256 region of the CCD FOV occurs if the sub-window is moved to the diagonally opposite corner of the region. This scenario requires 246 additional line scroll operations to reach the first line of the sub-window. For all lines contained in the sub-window, 246 additional pixels per line are read out in order to reach the first column of the sub-window. The calculated frame rates for these three scenarios are shown in table 3.

Table 2: TC237 Maximum Frame Rates for One Sub-Window

Readout Operation	Theoretical 10 MHz	Release 1.0 10 MHz	Release 2.0 15 MHz
Refresh Time (μS)	50	50	33.3
First Window Scroll Time (μS)	0.7	1	0.8
Row Read Time First Window (μS)	1.0	14.5	13.9
Window Read time First Window (μS)	8	116	55.7
Frame time (μS)	58.7	167	89.8
Frames per Second	17035	5988	11135

Table 3: TC237 Minimum Frame Rates for One Sub-Window

Readout Operation	Theoretical 10 MHz	Release 1.0 10 MHz	Release 2.0 15 MHz
Refresh Time (μS)	50	50	33.3
First Window Scroll Time (μS)	171.5	245	187.8
Row Read Time First Window (μS)	25.4	38.9	30.2
Window Read time First Window (μS)	203.2	311.2	120.8
Frame time (μS)	424.7	606.2	342
Frames per Second	2354	1649	2923

As can be seen in this table, frame rates of approximately 1.6 KHz are achievable for release 1.0. The theoretical case at 10 MHz is approximately 2.3KHz. Release 2.0 should be able to achieve frame rates approaching 3 KHz for similar timing in transferring pixel data to the C40.

This methodology for collecting a sub-window was used to capture the image shown in Fig. 6. This figure shows a 128x128 image taken with the CCD camera and the histogram for this image. The horizontal axis of the histogram represents pixel intensity with an 8-bit dynamic range and the vertical axis is the number of pixels with a particular intensity value. This image was taken with an approximate gain of two for in the TLV987 and a 10 msec integration time. The integration time was defined by setting the frame rate to 100 Hz.

This image was taken to get a basic assessment of camera operation. As can be seen from this image, the pixel intensities are distributed over half of the 8-bit dynamic range. From this image, we see that the ADC dynamic range is too large for the given image intensity and gain setting in the TLV987. A better match to the ADC dynamic range is achievable by increasing the gain setting in the TLV987. More work is needed to configure the TLV987 before quantitative characterization of camera images can be done.

Figure 7 shows a rough signal versus time plot for a TLV987 gain of two, leading to the estimate of about 400 signal electrons per digital number (DN), based on detector full well capacity. The TLV987 gain was set too low for this plot; near-term modifications will be made to allow changing the gain, and then characterizing the detector noise and linearity, along with the spatial uniformity and residual image analysis.

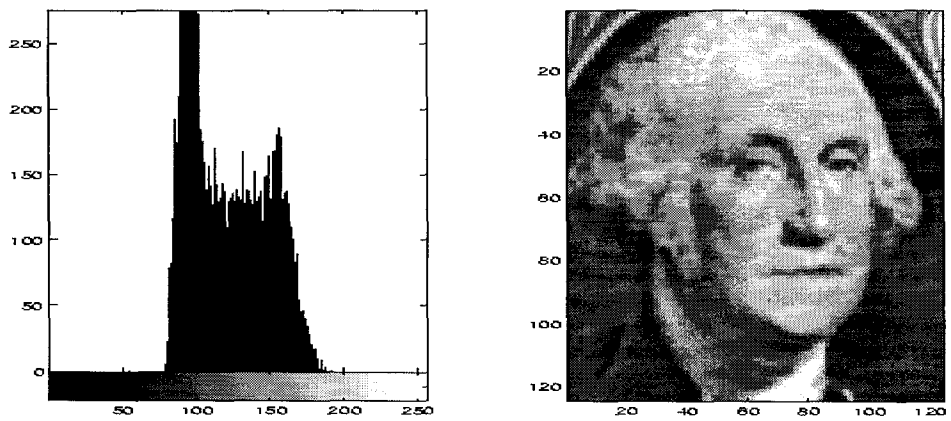

Figure 6 – 128x128 Image from CCD Camera

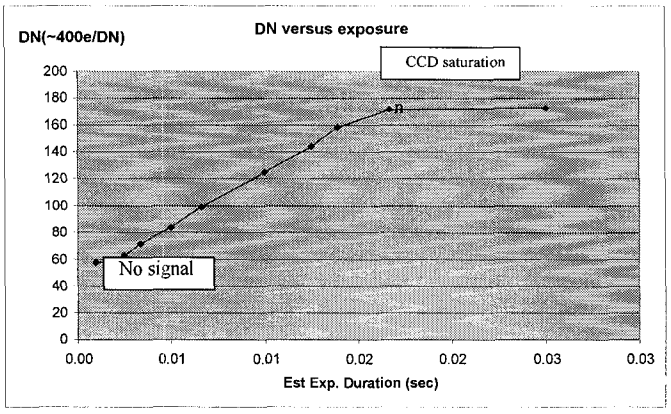

Figure 7 – Exposure time versus pixel DN

6. CONCLUSIONS

This paper presents a camera design based on the Texas Instruments TC237 CCD imager chip. The motivation in designing a custom camera is to achieve sub-window imaging capability for frame rates of several kilohertz with 10-bits of resolution per pixel as part of the tracking apparatus for a free-space optical communications link. Preliminary results for the camera exhibit frame rates up to 6KHz for a single 8x8 sub-window within the FOV of the CCD imager chip with 7-bits of resolution per pixel. These results are for release 1.0 of the camera, which was designed to interface with a legacy testbed for evaluation purposes of the camera.

Future work involves characterization of the optical qualities of the camera. The TLV987 parameters, including bias calibration and black-level control to name a few, are currently set to the device defaults with the gain of the device being hardwired to a single setting. In order to characterize the optical qualities of the camera, additional logic is needed to program the TLV987 registers. This work will be done in the coming weeks to define the optical properties and required improvements to meet the needs for a free-space optical communications terminal.

Release 2.0 of the camera will aim to increase the pixel rate from the camera to 30 mega-pixels per second and increase the pixel dynamic range to 10 bits. The increase in pixel rate will be achieved by increasing the camera system clock to 15 MHz and utilizing both pixel output ports of the TC237 CCD. Improvements in the pixel dynamic range require additional adjustments to the CCD control signals from the FPA interface card. Such adjustments may include modifications to both the sequence and timing of the TC237 control signals to improve clearing and transfer of charge within the CCD.

This camera development provides a necessary component for an optical communications terminal. The outcome of this work will determine the limitations of this camera design, the suitability of the TC237 imager chip for optical tracking applications and define how best to operate the camera for different scenarios. It will provide a road map to address any deficiencies found with this implementation and suggest possible avenues for future implementations.

Acknowledgments

The authors of this work wish to thank Ichiro Fujii of Texas Instruments for his helpful comments and insights concerning the operation of the TC237 imager.

The research described in this paper was carried out at the Jet Propulsion Laboratory, California Institute of Technology, under a contract with the National Aeronautics and Space Administration.

REFERENCES

[1] C. Chen, J. W. Alexander, et. al., "System Requirements for a Deep Space Optical Transceiver," in Free-Space Laser Communication Technologies XI, G. Stephen Mecherle, Editor, Proceedings of the SPIE Vol. 3615, pp. 142-152 (1999).

[2] A. Portillo, S. Monacos, "TC237 CCD Sensor Camera Design Specification for the Optical Communications Demonstrator Acquisition, Tracking and Pointing Subsystem", JPL internal document, October 19, 2000.

[3] Texas Instruments, "680x500 Pixel CCD Image Sensor TC237", June 1996.

[4] Texas Instruments, "TC237 Timing of Frame Transfer CCD Image Sensor", June 1996.

[5] Texas Instruments, "3-V 10-Bit 27 MSPS Area CCD Sensor Signal Processor TLV987", September 1999.

Steve Monacos received the Associate in Arts Degree from Pasadena City College (valedictorian), the Bachelors (Magna Cum Lauda) and Masters degrees from

the University of California, Los Angeles, and the Engineers and Doctor of Philosophy degrees from the University of Southern California, all in electrical engineering. He joined the Jet Propulsion Laboratory in 1982 after receiving the bachelors degree and continued with graduate school while working at JPL. His experience includes work in the areas of high-speed optical communication networks, guided and free-space optical communication links, optical tracking systems, embedded control systems, FPGA/ASIC design, communication systems and board-level hardware design, analysis and implementation. He has authored/co-authored 12 publications in these areas and holds two patents with a third patent pending in the area of optical communication schemes. His research interests include optical networking schemes and real-time embedded control systems.

Angel A. Portillo graduated from the University of Texas at El Paso in 1995 with a B.S. in Computer Engineering. He received an M.S. degree in Computer Engineering from The University of Texas at El Paso in 1997, while assisting in research activities in the area of Image Processing. He is currently a member of the technical staff of the Digital Signal Processing Research Group of the Communications Systems and Research Section at the Jet Propulsion Laboratory in Pasadena, California. His research interests include, computer vision, real-time systems, and computer architecture.

William Liu graduated from Carnegie Mellon University with a B.S. in Computer Science. His primary course work involved Operating Systems, Networks, Artificial Intelligence and Machine Learning. He is currently involved in Acquisition, Tracking and Pointing for deep space optical communications and the Atmopsheric Visibility Monitoring program at the Jet Propulsion Laboratory.

James Alexander received an A. B. from U.C. Berkeley and an M. A. and C. Phil from UCLA. Since 1983 he has been heavily involved at JPL in star tracker and scanner testing, analysis, requirements, scene simulation, calibration, algorithm design and implementation for missions such as the high precision Astro-1 shuttle experiment, Mars Pathfinder, Cassini and Europa spacecraft. Additionally, for several years he has been involved in pointing acquisition and tracking subsystems for deep space optical communications systems. He has authored or co-authored over 15 publications in star tracker testing, performance and analysis, as well as several in optical communication acquisition and tracking.

Gerardo G. Ortiz received the B.S.E.E. ('86) degree from UCLA and the M.S. ('93) and Ph. D. ('97) degrees in Opto-electronics from the University of New Mexico, Albuquerque, NM. After UCLA, he worked at the Jet Propulsion Laboratory developing millimeter-wave cryogenically-cooled Low Noise Receivers for JPL's Deep Space Network. In 1991, he was awarded a NASA Doctoral Fellowship to pursue graduate work at the University of New Mexico. While at UNM he focused on developing high-speed optical communications. His thesis work was the successful development of a wavelength division multiplexed (WDM) vertical-cavity surface-emitting laser (VCSEL) array monolithically integrated with wavelength matched WDM resonant-cavity enhanced photo-detectors. This yielded an opto-electronic communication fabric to enable over 20 channels of high-speed computer backbone inter-connects from a simple fabrication technique. In 1997 he joined the Free-Space Optical Communication Group at JPL. He is currently active in many aspects of the free-space optical link: system engineering, acquisition, tracking and pointing technology, efficient space lasers, and ultra-sensitive receiver development. He has just completed design of an ultra-sensitive large-area opto-electronic receiver for Mars missions and is currently Task Lead for research and development of the Acquisition, Tracking and Pointing Sub-system for free-space optical communication terminals. He has authored over 20 refereed papers, articles and conference presentations.