A 1.2 THz planar tripler using GaAs membrane based chips

Jean Bruston †, Alain Maestrini, D. Pukala, Suzanne Martin, Barbara Nakamura, and Imran Mehdi

SWAT

Caltech – Jet Propulsion Laboratory

†Now at ESA - ESTEC, Netherlands

Presentation to the 12th International Symposium on Space THz Technology

Feb. 15th, 2001

Introduction

- Objectives: Demonstrate supra THz planar multiplier technology.
- Rationale: provide components for space borne receivers.
- State of the Art: Planar Mixers: 2.5 THz (JPL, RAL).
  Planar Multipliers: 600 GHz (JPL).
- Status: Designed, built and tested a 1.2 THz planar tripler
- Results: 70 μW (1%) at RT, XX μW (XX%) at 120K

Technology demonstration: Frameless GaAs Membrane

Get rid of thick GaAs support frame

- Advantages:
  - Increased design flexibility: YES
  - All shapes possible: YES
  - Split waveguide block implementation possible (no frame in the way): YES
- Drawbacks:
  - Handling (use of "sacrificial frame" possible): NOT AN ISSUE

Extensive use of Beam Leads

- Advantages:
  - Simplified assembly (no soldering, chip "dropped in"): YES
  - Simplified bias scheme (no wire bonding): Current scheme not satisfactory for assembly. New one being implemented. RF & DC work.
  - Low loss, high bandwidth antennas/circuits (air dielectric): YES
- Drawbacks:
  - Fragile during handling: NOT AN ISSUE

1.2 THz tripler using planar Schottky diodes on GaAs membrane

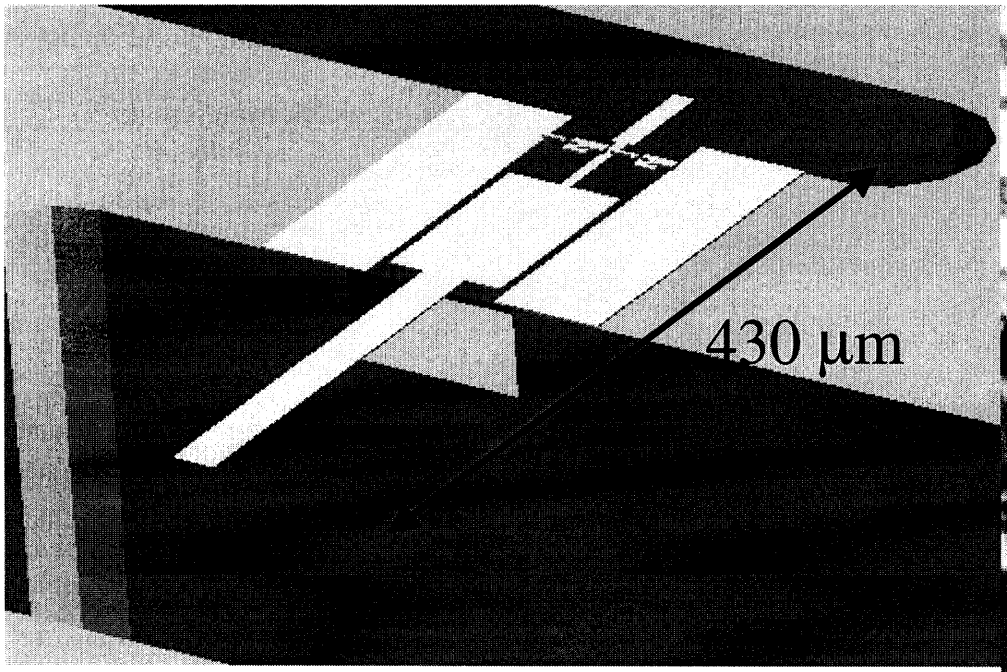

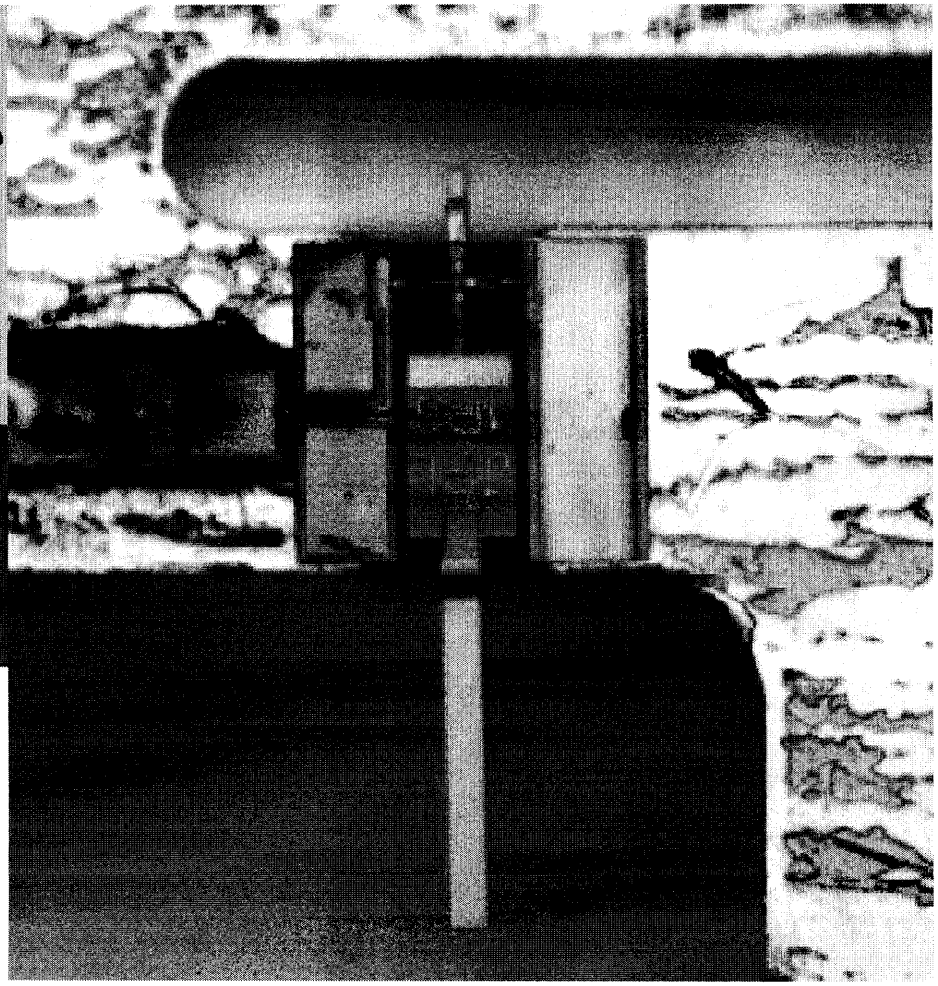

- Balanced tripler for odd harmonics.
- Split waveguide block.
- Simple bias scheme.
- Tunerless
- Predicted efficiency is 2%.

Design: device optimization and diode loop

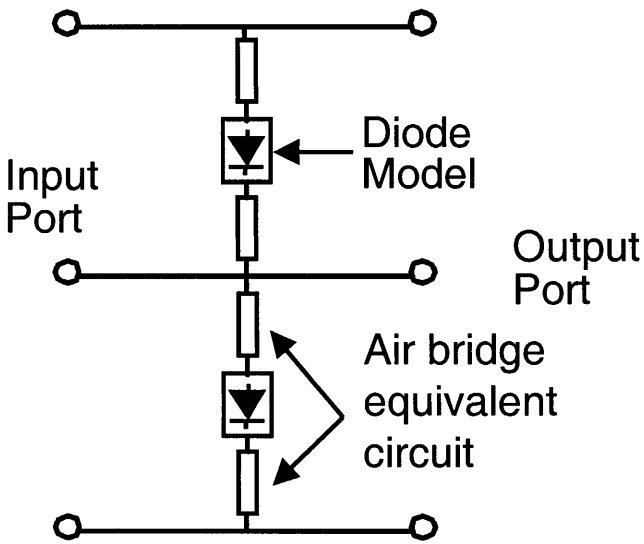

Planar Diode properties:

Epitaxial doping concentration: 5×10^{17} cm^{-3}

Anode size: 0.4 x 1.3 μm

Diode efficiency = 10 %

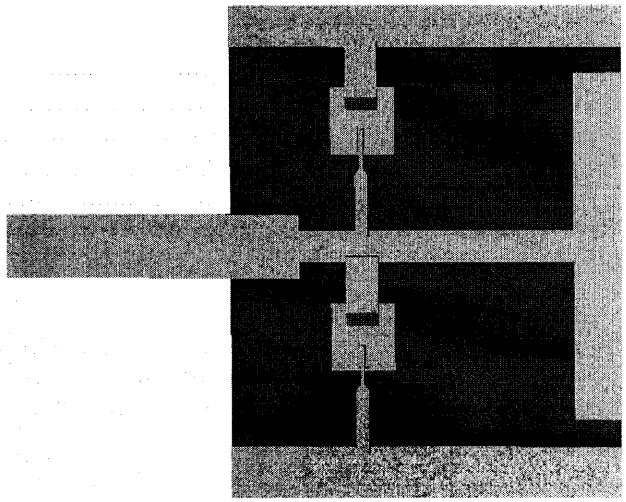

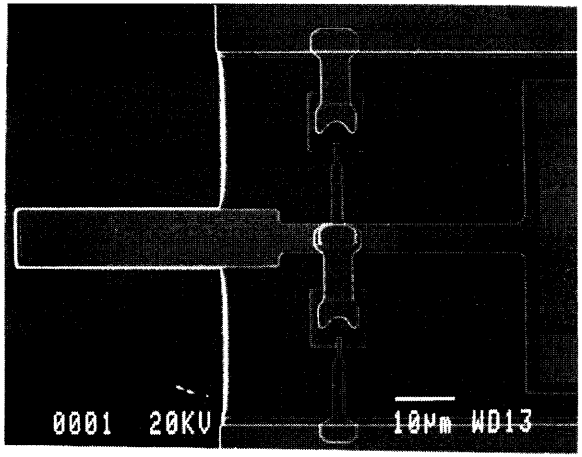

Diode loop efficiency = 5 %

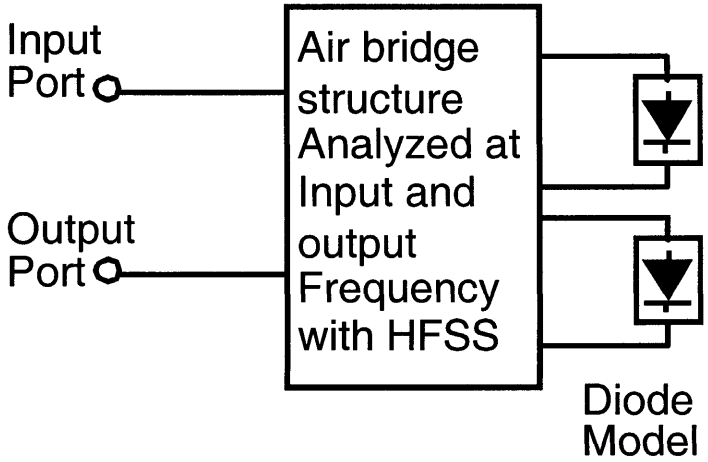

Design: waveguide probes, bias and matching circuits

- Probes: low impedance design to match diodes. Output probe naturally matches the diodes at output freq.
- Matching circuit: none on output. 2 elements high-low on input for match and low pass.
- Bias: one air bridge launches from MIM capacitor to the mesa.

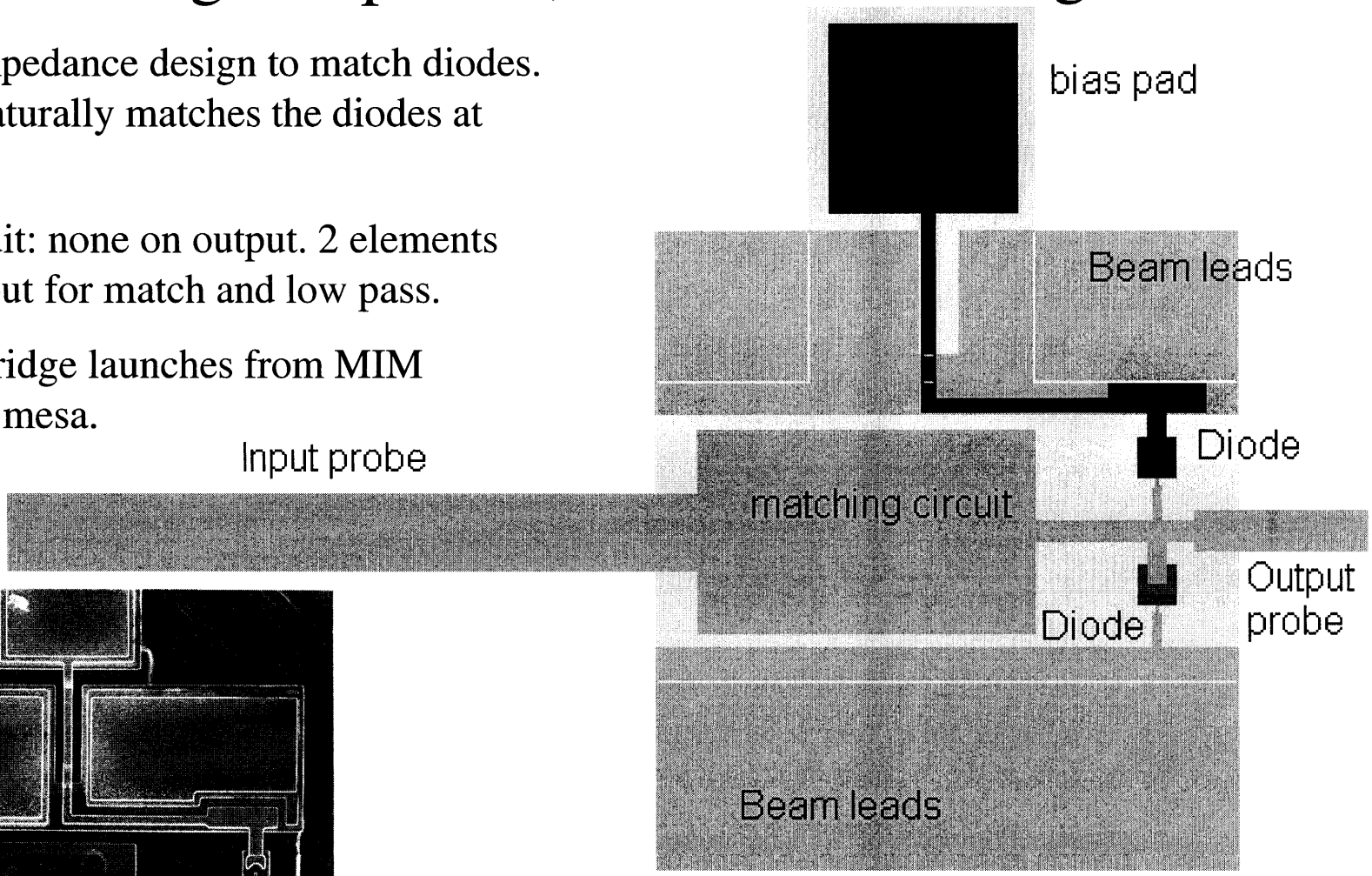

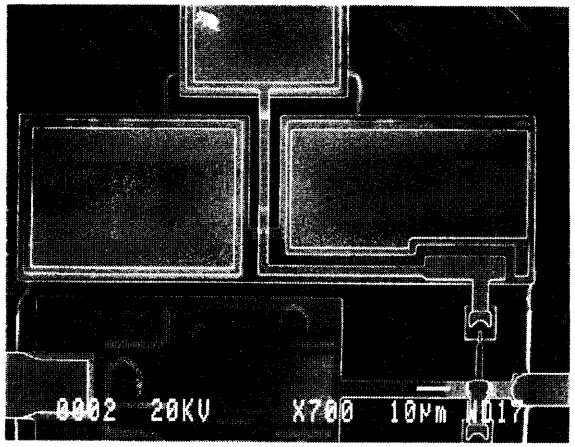

Design

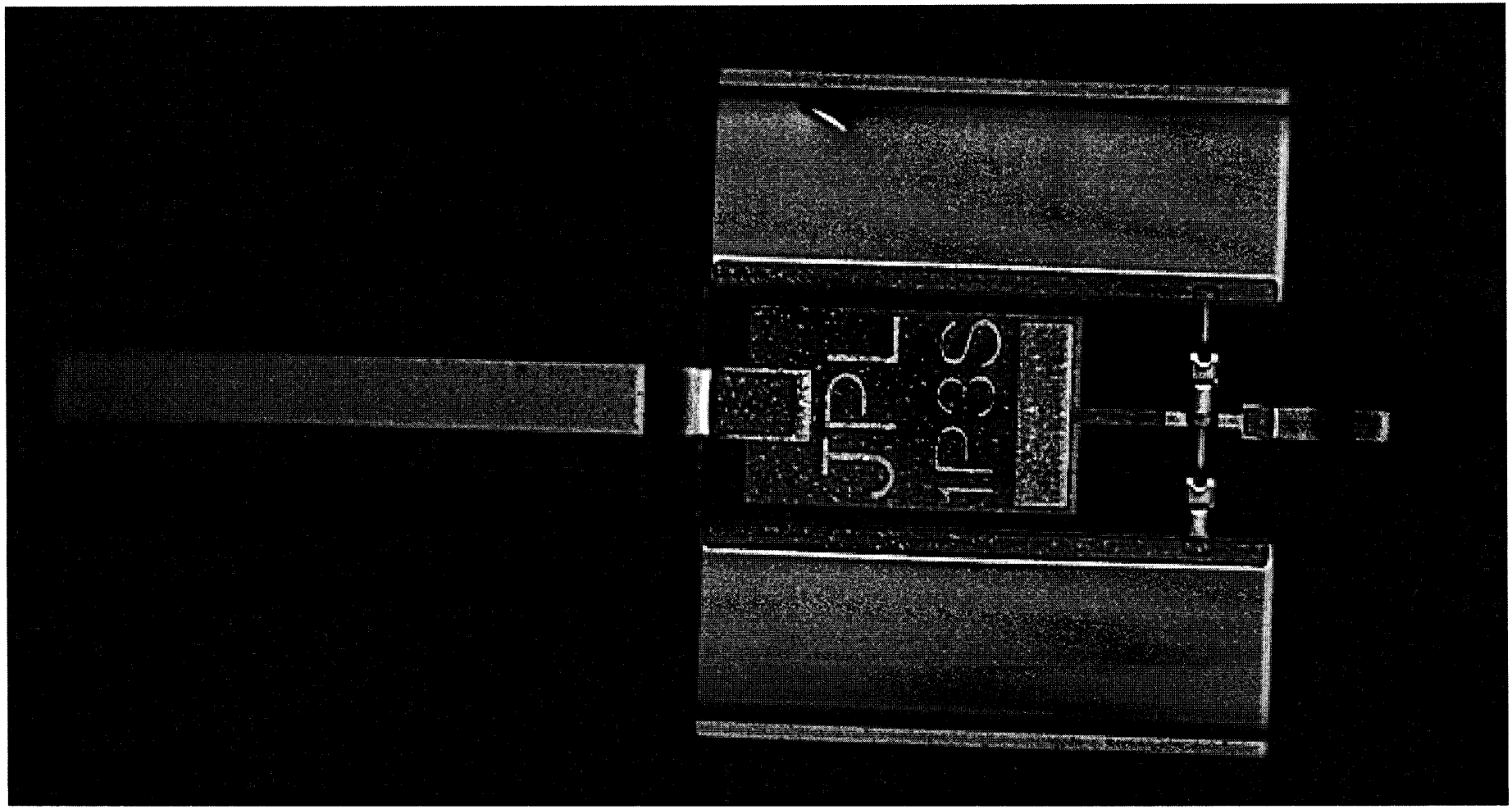

Design: housing block and integrated horn

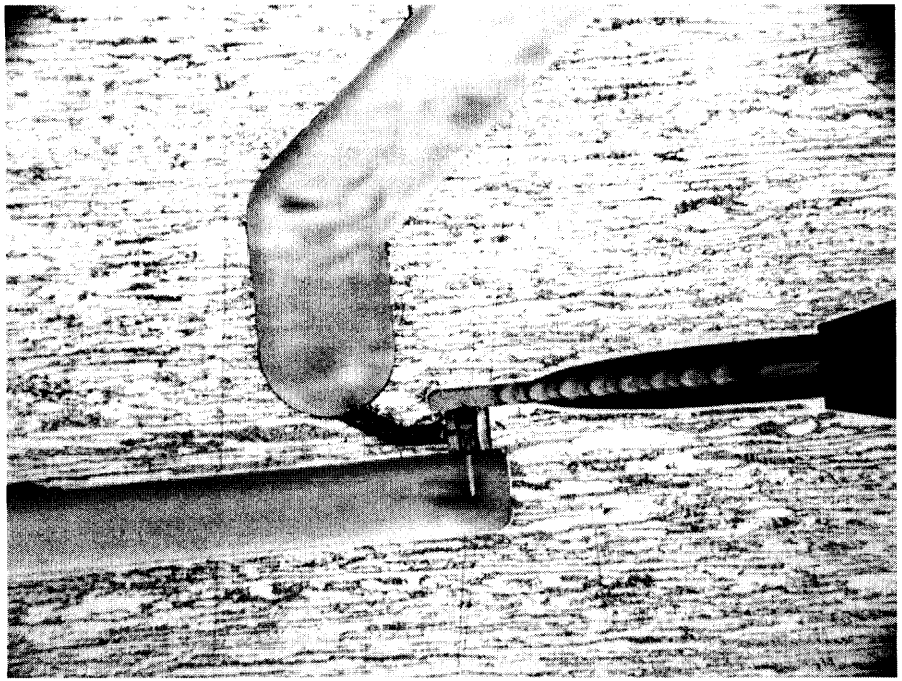

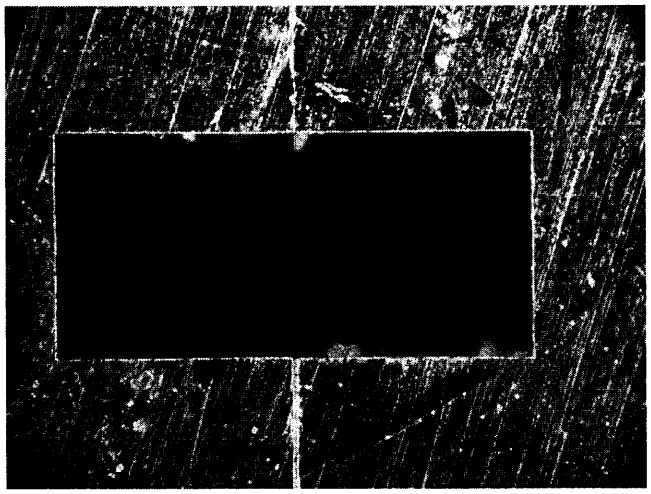

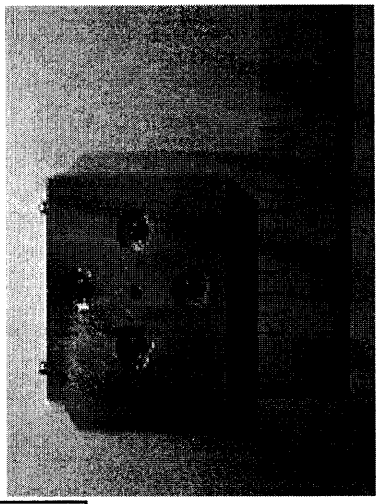

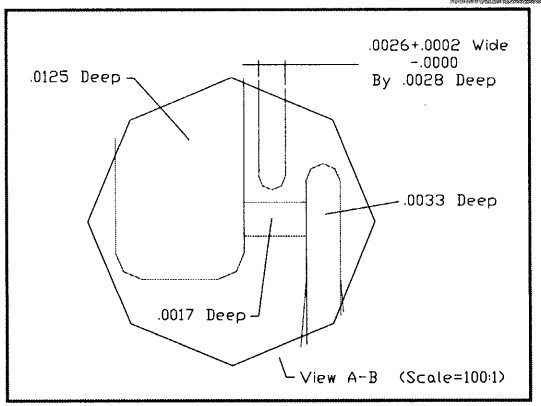

- Low loss E-plane split waveguide.
- In-line design.
- Picket-Potter horn with new transition from rectangular to circular waveguide make machining simple and scalable to higher freq. (2.4 THz built).

Measurements

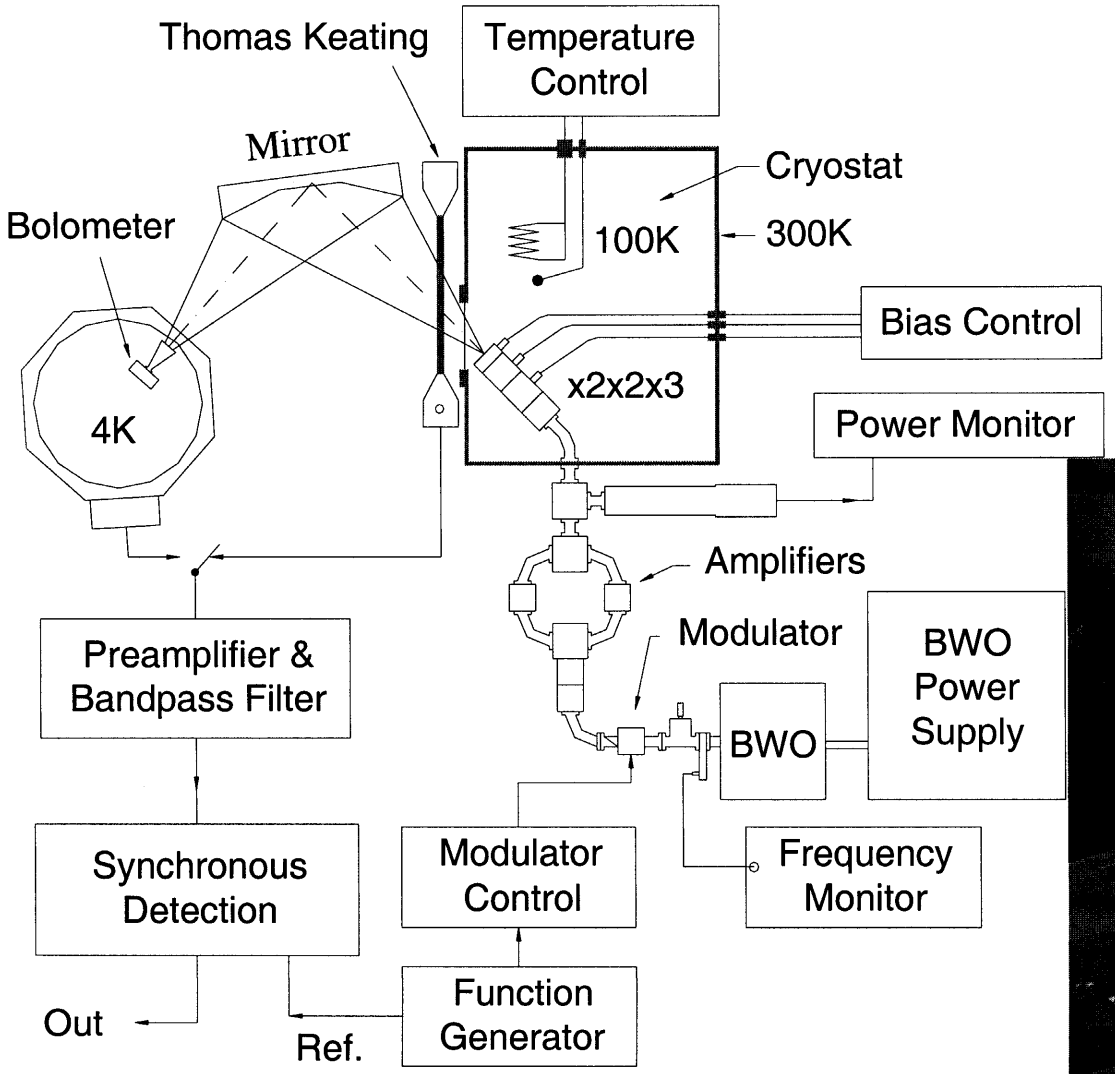

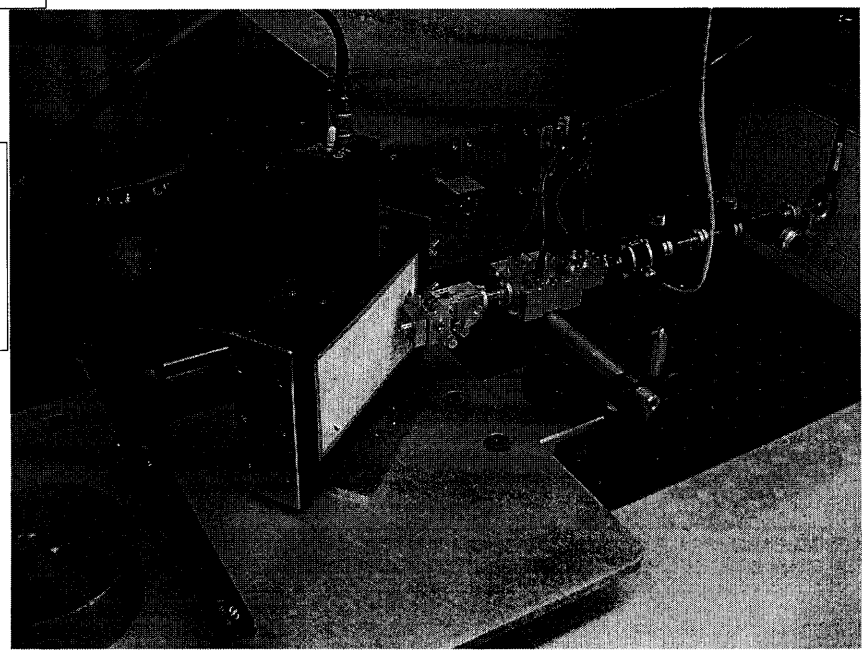

Performance

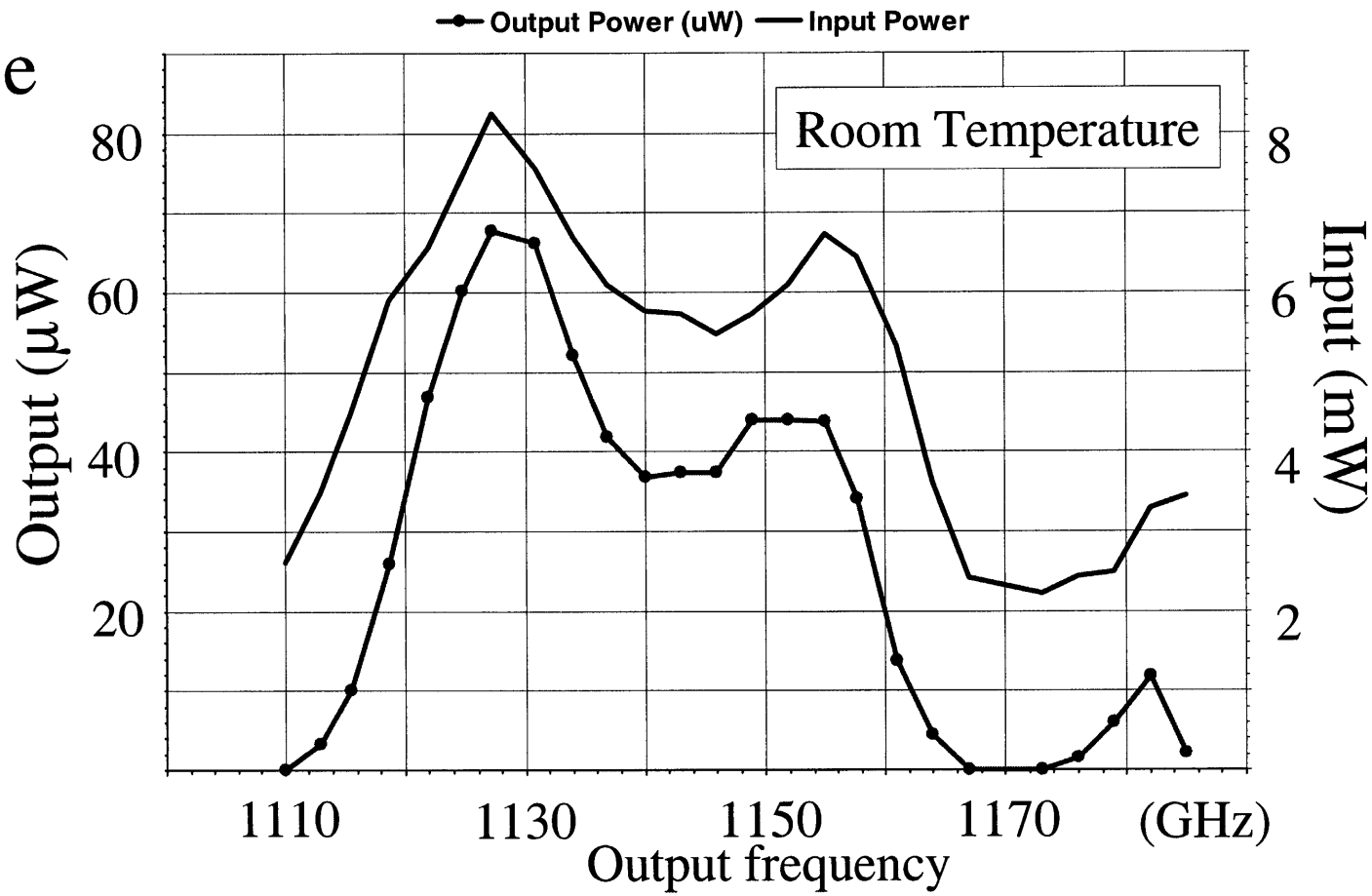

- No bias.
- Tuner-less.
- Designed for 10 mW input power, available only as peak power.
- 70 μW, 1.0 % max output, 3.5% 3dB BW, all solid state chain @ RT.
- XXX at 120 K (XXX %)

Performance

- Design is autobias. Biasable chip has comparable perf. to non biased one, with optimum bias ~ 0V.
- Only nominal (0.4x1.3 um2) and smallest diode tested. Other variations (including circuit) to be tested soon.
- Measured data do not correct for atmospheric loss (may be significant around water lines).

Conclusion

- Developed and demonstrated GaAs Membrane Technology:
  - *Free standing membrane is sturdy.*
  - *New beam lead structures provide RF probes, tuning elements, mechanical support and DC bias contacts.*
  - *Increases design flexibility:*
    - *split waveguide.*
    - *bias scheme.*
    - *Integration.*
    - *Multi-diode schemes expand circuit applications*
  - *Shrinked overall circuit dimensions increase device yield/wafer.*
  - *Chips are easy to handle. Assembly is VERY reproducible.*

Conclusion (cont'd)

- Designed, built and tested a 1.2 THz planar tripler
  - *Robust design concept and methodology (first try works).*
  - *Fully scalable (design, fab., block) to higher freq (2.4 THz underway).*
  - *1.2 THz tripler showed record performance*
    - 70 uW, 1.2 % @ RT, XXX @ 120K.
    - *Demonstrated technology for FIRST- HIFI.*

Acknowledgment

- Pete Bruneau, for block fabrication, and Ray Tsang, for device assembly. The SWAT group, for overall support.

- The research described in this presentation was carried out at the *Jet Propulsion Laboratory, California Institute of Technology*, under a contract with the *National Aeronautics and Space Administration.*