Overview of Laser Communications Research at NASA / JPL

H. Hemmati

Optical Communications Group
Jet Propulsion Laboratory, M/S 161-135
California Institute of Technology
4800 Oak Grove Drive
Pasadena, CA 91109-8099

Abstract

Future NASA and commercial space missions will require communications terminals to provides higher data rate with lower mass and power. Optical communications is a rapidly developing technology in response to this demand. Component and system technologies for both communications from Earth orbit and deep space is under development. This includes both ends of the link: the flight terminal and the ground receiver. Data-rates for Earth-orbit to ground or earth-orbit to earth orbit (e.g. LEO-to-GEO) are on the order of Gig-bits per second (Gbps). A 1-meter diameter ground receiver would be adequate at this range. The deep-space communication data-rates are on the order of 10's of kbps to 100's of kbps. Large receiver diameters (ideally greater than 10 m) will be required for most deep-space missions. The ground receiver will be a non-imaging system to efficiently collect signal photons. Thus, surface quality could be inferior to those used for astronomy. However, surface quality has to be high enough quality such that the received beams may be focused to a small diameter detector (a few hundred microns to a few millimeters in active region depending on the pulse-width of the signal and requirements for ranging). NASA is currently building a 1-m R&D telescope laboratory at its Table Mountain Facility in southern California to answer key implementation questions of this technology. The telescope is designed with fast tracking capability and will act as a testbed for development of ground acquisition, tracking and communications strategies applicable to future operational stations. Establishment of requirements and analysis to predict the performance of large diameter "photon bucket" telescope is continuing. These and other programs currently under development are described below.

Keywords: Optical communications, laser communications, photon bucket

Introduction

The trend towards smaller spacecraft returning higher volumes of data will dictate that the communication system relaying those data be smaller in size, mass and power consumption. Free-space optical communications is can effectively address the increased communication capacity and reduced size requirements. Analysis indicates that optical Communications has the promise of providing at least an order of magnitude higher data-rate relative to the RF communications, given an identical DC input power to both terminals. As the range and data-rate increase the advantages of optical communications over the conventional RF systems increases as well. Large ($\geq$10 m in diameter) ground receiver optical apertures that could be constructed inexpensively are required for reducing the burden on the capability of the flight terminal. Telescope mirror tolerances may be reduced relative to imaging telescopes since the ground receiver is meant to collect photons only and is not utilized for imaging. Therefore, the so-called photon-buckets may be constructed less expensively relative to those for astronomy.

The potential of laser communications is due to a much higher collimated signal than microwave. This highly collimated beam, can result in a terminal design with greatly reduced size, mass, and power requirements. Furthermore, laser communication systems are not susceptible to radio-frequency interference and are not subject to bandwidth regulation. Additionally, the higher data return rates afforded by optical communications reduce the required ground coverage time that is needed to recover the science data. This results in a reduced ground operations cost. Both component and subsystem technology development efforts are now underway to enable future operational optical communications from deep space and to more fully realize the potential of this technology. Some of these efforts are summarized here.

OCD (Optical Communications Demonstrator) is a brassboard lasercomm demonstration terminal designed to validate several key technologies, including beacon acquisition, high bandwidth tracking, precision beam-pointing and point-ahead

compensation functions [1-3]. The instrument (shown in Figure 1) has a 10-cm diameter aperture, uses a CCD array for both spatial acquisition and high bandwidth tracking, and a fiber-coupled laser transmitter.

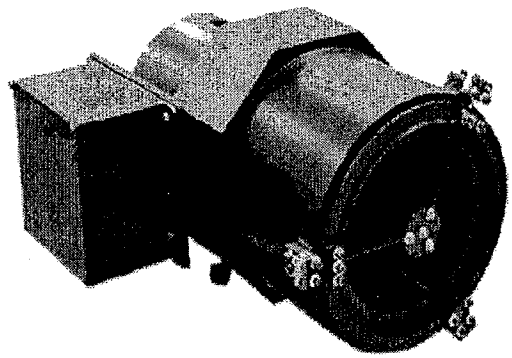

Figure 1. Picture of the OCD instrument

The next generation of the OCD instrument is now being designed now. The transceiver under investigation for this technology development spacecraft is a multi-functional instrument with capability for narrow-angle (high-resolution) science imaging, optical navigation and ranging in addition to communication. The current baseline is multi-Gigabit from LEO orbit and 100's of kbps data-rate from a range of 2 AU.

For deep-space optical transceiver, the generic requirements are:

- Several 100's of Kbits/s (Kbps) downlink, and about 2 Kbps uplink capability.
- Beacon source acquisition, tracking and reception of uplink command while transmitting a strong downlink signal through the same aperture
- Precise pointing of a highly collimated laser beam to Earth while the host spacecraft is oscillating, jittering, contracting and expanding. Maintaining pointing of the transmit signal during daytime reception with an absolute accuracy on the order of micro-radians.
- Acquisition and tracking of the ground receiver locations, from deep space, for a wide range of Sun-Earth-Probe (SEP) angles.
- Simultaneous two-way ranging and communication support.
- Sufficient reliability to survive the targeted mission period and to remain opto-mechanically and thermo-mechanically stable during launch, cruise and intense operation phases of the mission.

A schematic of the type of flight terminal architecture that JPL has been utilizing is schematically shown in Figure (2). The terminal consists of data transmit, uplink receive, acquisition and tracking, and boresight channels. All these have to be implemented with high mechanical and thermal stability, very compact, low -mass and as low a power consumption as possible. To enable future operational optical communications from deep space and to more fully realize the potential of this technology, both component and subsystem technology development efforts are now underway. Some of these efforts are summarized below.

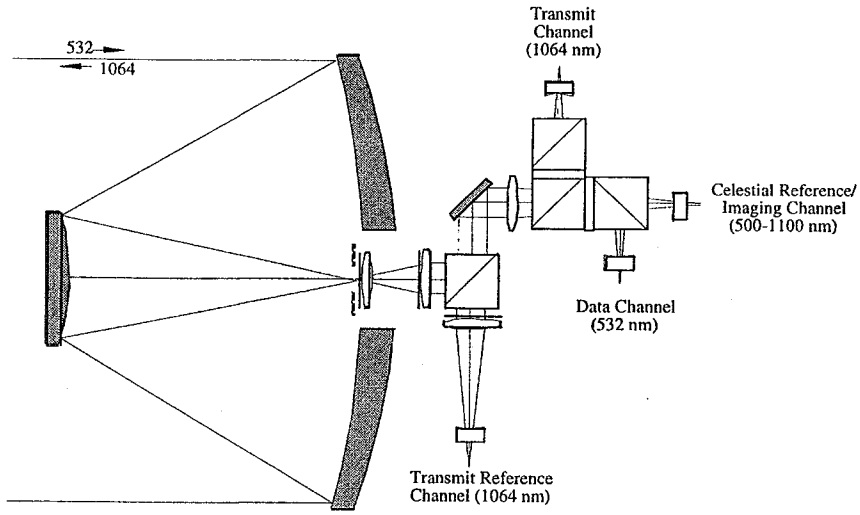

Figure 2. Conceptual Optical Diagram for the Transceiver

Acquisition, Tracking and Pointing (ATP) Algorithms and Testbed:
ATP is the most critical element of a free-space optical communication instrument. Implementation strategy for ATP is determined primarily by range. The narrower transmit beamwidth out of the optical communication terminal poses a major technical challenge that is the ATP process. The lasercomm transceiver must be capable of tracking the receiving station to maintain a residual pointing error that is small compared with the transmit beamwidth. The optical communications system must have the ability to track out base platform motions from the spacecraft in order to keep the downlink beam on the Earth receiver. Current tracking options include laser beacon tracking, extended-source Earth tracking and precision star tracking. A dynamic testbed, where spacecraft vibrations could be simulated in, has been setup to primarily characterize precision star-tracking and laser beacon tracking. The testbed utilizes high (5 kHz) update rate focal-plane arrays and fast steering mirrors. The objective of this testbed is to develop hardware and algorithm to achieve pointing accuracies to better than 1/20 of a pixel utilizing very low power consumption components..

High Efficiency Component and Subsystem Technology Development:
Current Q-switched diode-pimped solid-state lasers have a wall-plug efficiency of 7% at best. These type of lasers which provide both high average and high peak power are necessary for implementation of the PPM (Pulse Position Modulation) scheme which provides significant link margin improvement. The aim of this task is to substantially improve the efficiency and performance of components and subsystems for laser-communication terminals. Recent analysis indicates that an overall efficiency of 25% for diode-pumped pulsed laser transmitters is possible. Mass and the required DC power for the flight instrument are both very expensive commodities, particularly in deep-space missions.

Transmitter and Receiver Testbed (for flight and ground):
A testbed for extensive characterization of a variety of laser transmitters and receivers has been development. This testbed is serving the needs of various on-going programs and could serve programs external to JPL in the near future. A goal of this testbed is to identify highest quantum-efficiency and lowest noise avalanche photodiodes for both ground and in space reception of the lasercomm signals. A goal of this program is to identify detectors and amplifier for (direct) detection of a few photons per bit of communication signals.

GROUND RECEIVERS AND GROUND RECEPTION TECHNOLOGIES. Development of a network of 10-m-class ground receiving telescopes is tentatively planned for completion within a decade. A 1-m R&D laser-communication telescope laboratory is under construction at NASA-JPL's Table Mountain Facility in Wrightwood, CA (near JPL). This facility is intended to answer key implementation questions of this technology [5]. The expected date for readiness of this telescope is October of 2001. Current ground system studies and experimental effort include: development of high performance (high quantum efficiency, low-noise) receivers for ground reception; definition of requirements and cost-estimates for larger

aperture (> 10 m) photon-buckets; schemes for implementing near-earth acquisition and communication with the spacecraft; and recovery from spacecraft emergency scenarios.

DEMONSTRATIONS: JPL has successfully performed a number of experiments on uplink to a spacecraft in deep space and uplink and downlink with a spacecraft in the GEO orbit [6]. These provide a certain level of confidence about readiness of the technology. However, extensive link demonstrations from space are required prior to acceptance of this technology as an operational tool in future near-Earth and deep space missions. Reliable communications from Earth orbit to ground is now feasible due to significant technology advancements. Components and systems required to communicate from deep space have matured to the level that demonstrations and operational systems are feasible, particularly for Mars. The free-space Optical Communication technology enables multi-functional instruments combining high-data-rate communications, science imaging and sensors.

References:

[1] U.S. Patent # 5,517,016 "Lasercomm System Architecture with Reduced Complexity," May 1996.
[2] C. Chen and J. Lesh, "Overview of the Optical Communications Demonstrator," Proceedings of SPIE OE-LASE 94, paper 2123-09 (1994).
[3] J.V. Sandusky et al, " Overview of the Preliminary Design of the Optical Communication Demonstration and High-Rate Link facility 'SPIE V. 3615, 185-191 (1999).
[4] H. Hemmati & N. Page "Preliminary Opto-mechanical Design for the X-2000 Transceiver" SPIE V. 3615, 206-211 (1999).
[5]. K. Wilson et. al., " Progress in Design and Construction of the Optical Communications Laser Laboratory," SPIE, V. 3615, 201-205 (1999)
[6] K. Wilson et. Al., "Overview of the Ground to Orbit Lasercomm Demonstration (GOLD)," SPIE V. 2990, 23-30 (1997).

Acknowledgments.

The research described in this report was carried out by the Jet Propulsion Laboratory, California Institute of Technology, under contract with the National Aeronautics and Space Administration.