Mars exploration rover engineering cameras

Allan Eisenman,[1] Carl Christian Liebe,[2] Mark W. Maimone,[3]
Mark A. Schwochert,[4] Reg G. Willson[5]
Jet Propulsion Laboratory, California Institute of Technology, Pasadena, California

ABSTRACT

The NASA Mars Exploration Rover mission will launch two scientific spacecraft to Mars in 2003. The primary goal of the mission is to obtain knowledge of ancient water and climate on the red planet. Each spacecraft will carry one rover with a mass of ~150 kg and a design lifetime of about 90 days to the surface of Mars. The rovers are intended to travel about 100 meters per day. The scientific payloads of the rovers will include a stereo pair of Panoramic cameras and a Microscopic Imager. The Panoramic cameras also support the engineering functions of high gain antenna pointing and navigation by solar imaging. The rovers have six additional cameras that will be used, exclusively, for engineering. All nine cameras share a common design, except for their optics. The focal plane of each camera is a 1024 × 1024-pixel frame transfer CCD. A stereo pair of Navigation cameras is mounted on a gimbal with the Panoramic camera pair. The Navigation camera pair is used for traverse planning and general imaging. Finally, one stereo pair of wide-angle Hazard Avoidance cameras will be mounted on the front (and one pair on the back) of each rover to autonomously generate range maps of the surrounding area for obstacle detection and avoidance.

Keywords: Mars, Mars Exploration Rover, CCD, surface navigation, hazard avoidance, solar imaging

1. OVERVIEW

The NASA Mars Exploration Rover (MER) mission will send two scientific rovers to different Martian locations in 2003. The rovers will share a common design and will each have a mass of ~150 kg. They are designed to operate at least 90 days on the surface of Mars and to travel up to 100 meters per day. The rovers differ from the rover of the previous Mars Pathfinder mission. They are independent of the landing vehicle and therefore, they communicate directly with Earth. Also, the rovers are larger and include more autonomy.

The primary goal of the mission is to obtain knowledge of ancient water and climate on the red planet. In support of the primary goal, the rover payload includes a total of nine cameras of four types as shown in Figs. 1 and 2. The electronics design is the same for all, with a block diagram as shown in Fig. 3. The cameras only differ from each other in the type of optical assembly that are used, as detailed in Table 1.[1] The resulting four types of cameras are the Panoramic Camera (Pancam), the Microscopic Imager (MI), the Navigation Camera (Navcam), and the Hazard Avoidance Camera (Hazcam). Since the MI is only used for science, it will not be discussed. Six of the nine cameras are dedicated to engineering functions, while the Pancams support both engineering and science.

The space qualified charge coupled device (CCD) image detector, by Mitel, is a front side imaging, frame transfer type with 12 × 12 μm pixels, with a 1024 × 1024 pixel image register and a 1024 × 1024 pixel storage register. The full well capacity of the pixels is larger than 150,000 electrons and the dark current is specified at less than 1.5 nA/cm^2 at end of

[1] contact allan.r.eisenman@jpl.nasa.gov; phone 1 818 354-4999; fax 1 818 393-5007; http://www.jpl.nasa.gov/; Jet Propulsion Laboratory, M/S 198-135; 4800 Oak Grove Drive, Pasadena, California 91109-8099, USA
[2] contact carl.c.liebe@jpl.nasa.gov; phone 1 818 354-7837; fax 1 818 393-5007; http://www.jpl.nasa.gov/; Jet Propulsion Laboratory, M/S 198-235; 4800 Oak Grove Drive, Pasadena, California 91109-8099, USA
[3] contact mark.w.maimone@jpl.nasa.gov; phone 1 818 354-0592; fax 1 818 393-4085; http://www.jpl.nasa.gov/; Jet Propulsion Laboratory, M/S 125-209; 4800 Oak Grove Drive, Pasadena, California 91109-8099, USA
[4] contact mark.a.schwochert@jpl.nasa.gov; phone 1 818 354-1495; fax 1 818 393-3378; http://www.jpl.nasa.gov/; Jet Propulsion Laboratory, M/S 168-222; 4800 Oak Grove Drive, Pasadena, California 91109-8099, USA
[5] contact reg.g.willson@jpl.nasa.gov; phone 1 818 393-6165; fax 1 818 393-4085; http://www.jpl.nasa.gov/; Jet Propulsion Laboratory, M/S 125-209; 4800 Oak Grove Drive, Pasadena, California 91109-8099, USA

the mission at 27° C. The electronics allows exposure times of the camera from 0 to >30 seconds in steps of 5 msec. The frame transfer time is 5 msec and the read noise is less than 50 electrons. The signal is digitized with a 12-bit A/D converter, with a rate of >200,000 pixels/sec resulting in a frame read time of ~5 sec. The camera can also do binning in 4×1 pixel boxes and can be commanded to read a set of adjacent rows, instead of the full frame.

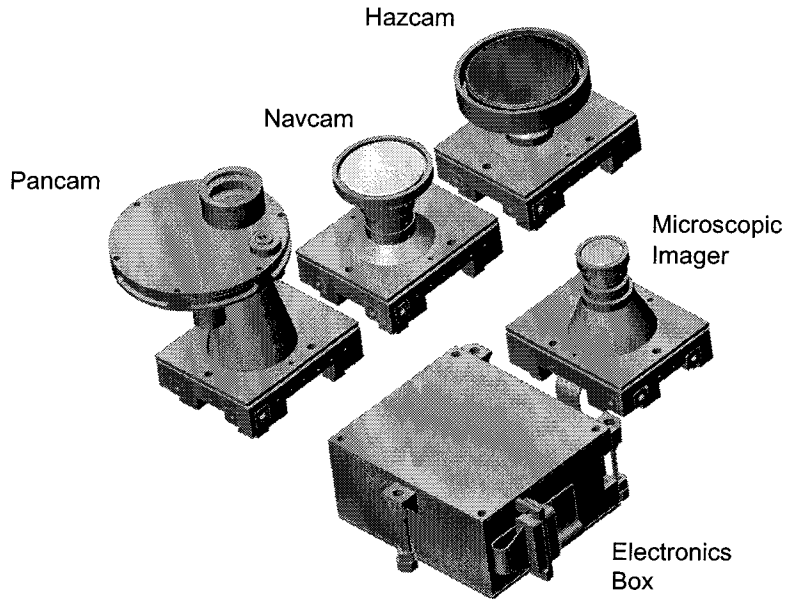

Figure 1: MER rover camera configurations.

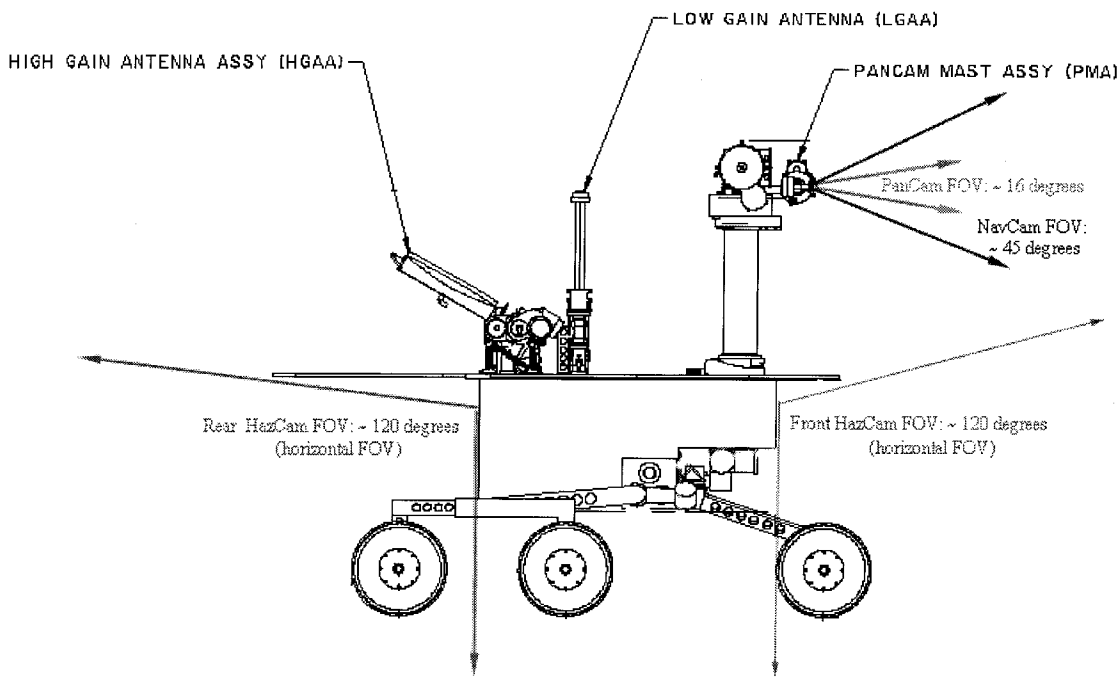

Figure 2: Rover schematic with camera locations.

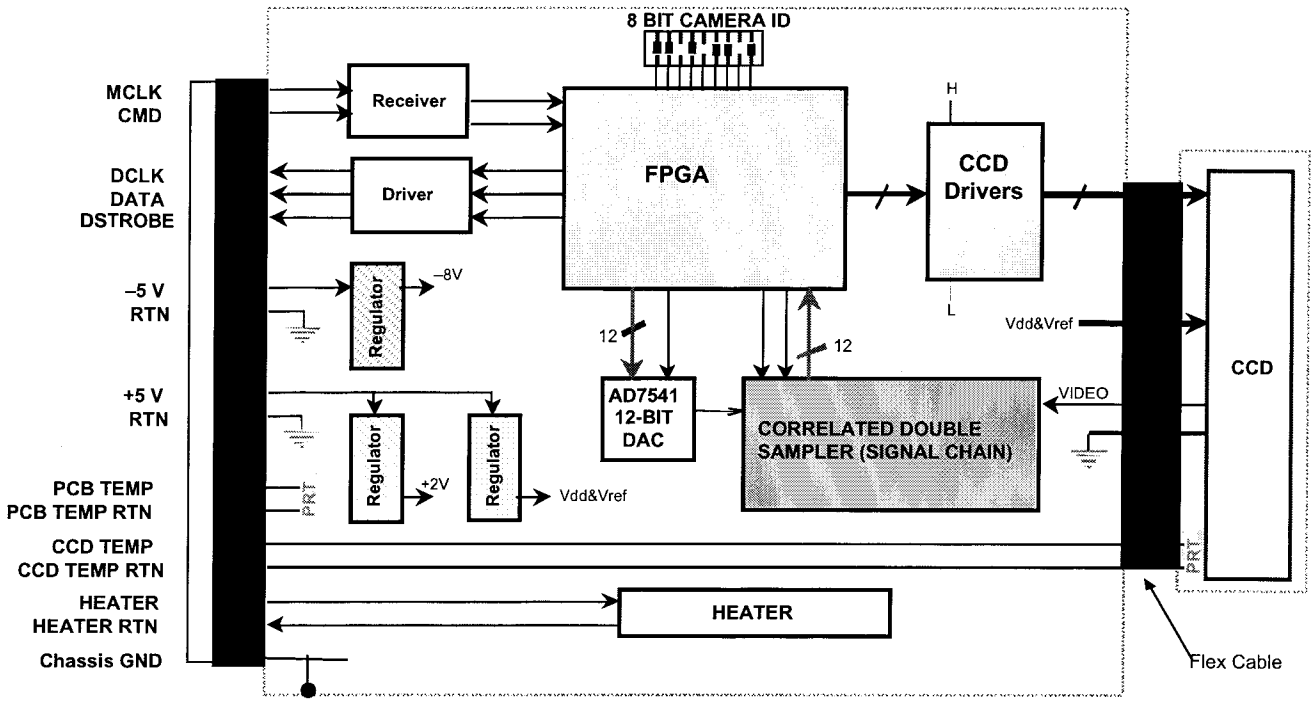

Figure 3: Electronics block diagram.

The engineering cameras serve several functions: (1) assess the state of the lander and rover after landing, (2) support deployments/rover egress, (3) support ground based navigation planning (target selection), (4) support on-board autonomous navigation, (5) support ground based instrument deployment planning, and (6) support high gain antenna pointing.

The engineering function of the Pancams is to image the sun and determine its orientation. This information, plus data from accelerometers that measure local vertical, is used to establish an inertially referenced coordinate system. Since Mars lacks an appreciable magnetic field, this system is used in lieu of a reliable magnetic compass. The coordinate system, including its knowledge of north, is then used for both navigation and pointing of the high gain antenna.

Table 1: Rover camera optics summary.

Parameter	Pancam	MI	Navcam	Hazcam
Focal ratio (f/#)	20	15	12	15
Field of view, deg	16 × 16	NA	45 × 45	180, diagonal
Angular resolution, mrad/pix	0.27	NA	0.77	2.2
Spectral bandpass, nm	400–1100	400–680	600–800	600–800
Spectral filters	8 per camera	absorbing	absorbing	absorbing
Neutral density filters	440/ND 5, 880/ND 5	NA	ND 1.4	ND 1.4
Depth of field, m	1.5–∞	±3 mm	0.5–∞	0.1–∞
Distortion type	f-tanθ	f-tanθ	f-tanθ	f-θ

The Hazcams are mounted in stereo pairs that provide imaging, primarily of the near field around the rover (<5 m), both in front of and behind the rover. These cameras will aid in determining a safe egress direction for rover. They provide

the data for on-board hazard detection using stereo imaging to build range maps. Finally, they support science operations for selecting near field target and instrument deployment mechanism operations.

There is one stereo pair of Navcams that provides longer range viewing of the terrain around the rover for use by ground operators in planning rover traverses. These cameras may also be used by on-board navigation algorithms to assist in autonomous navigation, or for general monochromatic imaging. They also support the science operations of near-field target selection and viewing some of the workspace of the rover's instrument arm.

2. THE PANCAM AND SOLAR IMAGING

The Pancams provide multiple functions in a single instrument package: full 360° azimuth and ±90° elevation gimballing of the imaging for morphologic, atmospheric, and geologic process studies; stereo imaging for 3-D site characterization and rover mobility issues; and multispectral imaging for rapid characterization of the mineralogy and color properties of the scene around the rover.

The Pancams will be mounted on a deployable mast, 50–70 cm above the rover deck. Both cameras will have identical optics with a 16° × 16° square field of view (FOV). Horizontal separation of 28 cm and small toe-in provide adequate parallax for stereo imaging. The optical design allows the Pancams to maintain focus from infinity to within 1.5 m of the rover, with an acceptable amount of defocus at closer ranges. In addition, each camera will have a small 8-position filter wheel to allow multispectral sky imaging and surface mineralogical studies in the 400- to 1100-nm wavelength region.

The primary engineering function of the Pancams is to assist in determining rover attitude. Attitude knowledge is used for pointing the high gain antenna towards earth and in determining the north heading of the rover. The attitude of the rover is based on measurements from two vector instruments: (1) accelerometers that determine the vector towards the center of gravity of Mars and (2) Pancam solar images that determine the vector to the Sun. In the case that the Sun is overhead, and the accelerometer and Sun vector measurements are close to anti-parallel (i.e., parallel, but pointing in opposite directions), it is not possible to determine the attitude of the rover in all three axes. Because of this, information on the missing axis is obtained by taking two solar measurements 10 minutes apart, resulting in a nominal spacing of 2.5°. With these two solar measurements, the attitude of the rover can then be determined in all three axes, and an inertially referenced coordinate system can be established[6].[2]

The right and left camera solar filters are different. One Pancam uses a narrowband filter at a wavelength of 440 nm. The other has a narrowband filter at 880 nm (Fig. 4). The different filters enable studies of the atmospheric spectral absorption and scattering.

The relatively narrow FOV of the Pancams means that initial acquisition of the Sun requires a sky search by rotating them on their gimbal. After the initial solar acquisition, the approximate direction of the Sun is known, a priori, and the Sun can subsequently be acquired in a Pancam FOV without a sky search.

In order to image the Sun without saturating the cameras, an ND filter with a value of 5 is used in combination with the narrow wavelength filters as shown in Fig. 4.

The distance from Mars to the Sun is 1.52 AU. Therefore the angular size of the Sun at Mars is only 0.35°. This is equivalent to a circular diameter of ~22 pixels in each Pancam. The readout time for the camera is 5 seconds, during which time the CCD dark current increases linearly over the image. A simulated image of the sun from the Pancam at Mars is depicted in Fig. 5. The effects of dark current are scaled for maximum temperature at end-of-life.

---

[6] Small measurement errors result in large heading errors when the Sun is overhead. Therefore, this demands much higher accuracy measurements than for the single measurement case in order to realize the same heading accuracy.

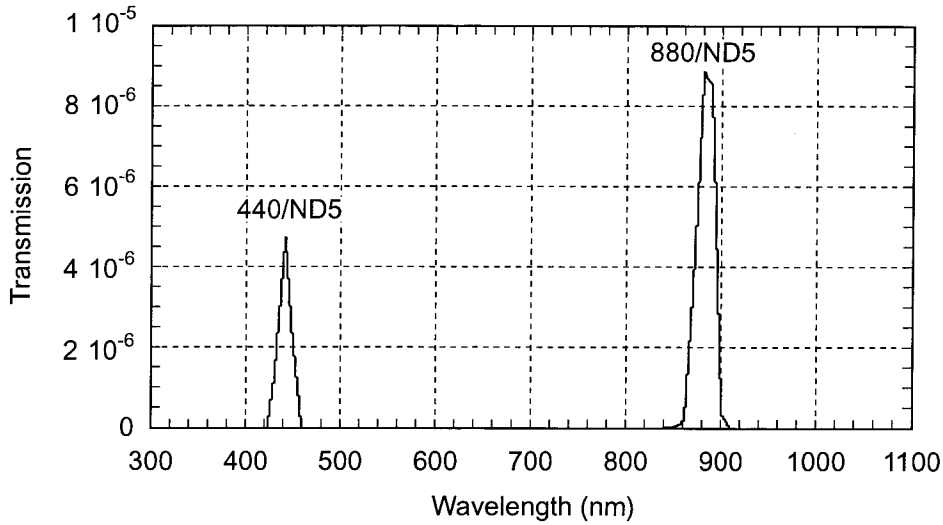

Figure 4: Pancam solar filter bandpasses.

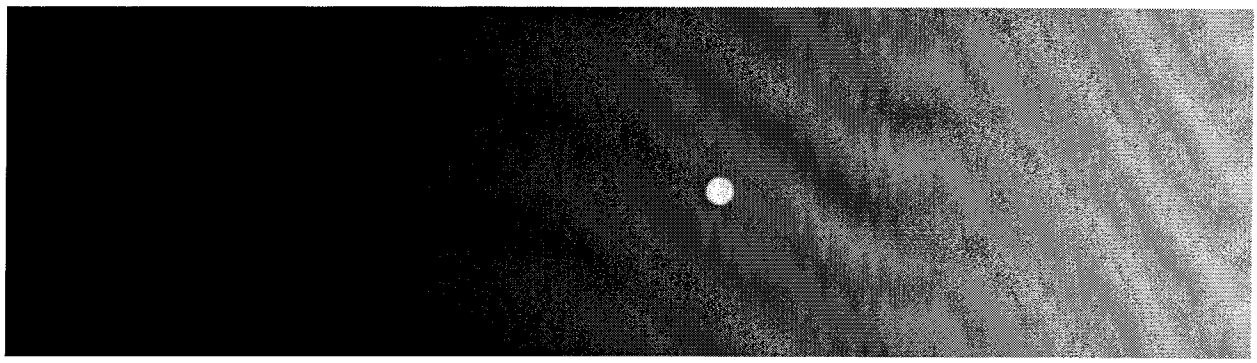

Figure 5: Selected columns of a simulated Pancam image of the Sun including dark current.

When a solar image is acquired, the dark current is estimated as a linearly increasing function of the column averages. The dark current image is then subtracted from the original image. Subsequently, a window of approximately 26 × 26 pixels is moved over the entire image. At all positions, the average pixel value of the border of the window is calculated and subtracted from those in the window. The sum of these background-subtracted pixels is then calculated at all positions and the position with the highest value is assumed to contain the Sun[7]. The centroid of the solar image is then calculated.[3]

The distortion of the optics is small (< 0.01%). Therefore, a simple pinhole model is used in calculating the solar vector from the image. The pinhole model consists of 6 parameters which are focal length, the intersection of boresight with the focal plane (x and y coordinate), and the rotation from the focal plane coordinate system to the external coordinate system (3 different Euler angles).[4]

The Pancam will be calibrated at a solar tracking heliostat facility. The output beam of the heliostat has constant orientation, regardless of the position of the Sun. The Pancams will be mounted on a precision 2-axis gimbal in the output beam of the heliostat. The gimbal will position the Pancam in a large number of orientations (~1000), where solar images will be acquired. This will result in an over-determined set of equations, which are solved for the six unknown camera model parameters.

[7] This algorithm favors bright spots with the approximate size of the Sun.

The expected accuracy of the solar vector in the Pancam frame of reference is: boresight accuracy ≤0.2°; accuracy at edge of field ≤0.27°; and relative accuracy over 2.5° ≤0.05°. Relative accuracy applies to the case when determination of the rover attitude is based on two measurements of the Sun when the solar vector and the gravity vector are close to anti-parallel.

3. STEREO NAVIGATION WITH THE HAZCAMS AND NAVCAMS

The MER rovers will have the ability to navigate safely through unknown and potentially hazardous terrain, using autonomous passive stereo vision to detect potential terrain hazards before driving into them. A local map of the terrain will be maintained onboard, by resampling and effectively managing the range data generated by stereo vision. The MER rovers will use navigational autonomy to safely drive as far as 100 meters per day.

3.1 Hazcam and Navcam configuration

The Navcam stereo cameras provide longer range viewing of the terrain around the rover for use by ground operations in planning traverses and may also be used by on-board navigation algorithms to assist in autonomous navigation.

A pair of Navcams is mounted on the rover's mast assembly ~1.2 m above the Martian surface. The cameras are mounted with a 20-cm baseline and parallel optical axes. Each Navcam has a depth of field from 500 mm to infinity and best focus of 1000 mm. The Navcam's 45° × 45° FOV is narrow enough to provide good stereo range resolution out to 30 m and wide enough to efficiently provide 360° panoramas for traverse planning.

Pairs of Hazcams are mounted on the front and rear of the rover ~50 cm above the Martian surface and pointed ~50° below horizontal. Both Hazcam pairs have a 10 cm baseline and parall°el optical axes. Each Hazcam has a depth of field from 100 mm to infinity and best focus of 400 mm. The Hazcam's 127 × 127° FOV provides nearby range data coverage beyond the width of the rover vehicle, and has good range resolution out to 3 m.

3.2 Stereo vision algorithm

The MER stereo vision algorithm can be described as follows. A pair of stereo cameras (Navcams, Pancams, or Hazcams) is rigidly mounted to a camera bar, and a pair of geometric camera lens models is calculated. The camera models precisely describe how coordinates in 3-D space map into the camera's 2-D image (typically with RMS projection error less than 0.2 pixels).[5, 6]

As the rover drives, pairs of images are acquired and fed into an image correlator that evaluates potential matches for all pixels. Matched pixels are triangulated to generate a range estimate for every pixel. Unreliable range estimates are automatically discarded, typically leaving 50–80% of the image with good range data. Range points are then compared against a known ground plane to produce an elevation image for the scene. Figure 6 shows the range and elevation images produced from a pair of cameras similar to the MER Hazcams, but with narrower field of view.[7]

Images from the Navcams and Hazcams can be processed at full 1024 × 1024-pixel resolution to yield the best range resolution, or at reduced pixel resolutions for faster computation but coarser range resolution. Figure 7 shows the Navcam and Hazcam's range resolution as a function of range at full and reduced image sizes.

3.3 Use of range data

The Navcams, with their 45° FOV and ability to be pointed in any direction, most often serve to acquire stereo grayscale panoramas, which are used by ground operators to plan the rover's motion for the next day. Interesting targets are identified by their appearance or shape and the terrain model generated from the panorama is used to plan the rover's motion toward them. Figure 8 shows a suggestive 3-D panorama from the Mars Pathfinder mission.

Nearby range data from the Hazcams is used by the Grid-based Estimation of Surface Traversability Applied to Local Terrain (GESTALT) software package for autonomous rover navigation.[8] GESTALT models the terrain as a grid of regularly spaced cells, where each cell is typically the size of a rover's wheel. In the first pass, range data are merely regrouped into these cells and broken down into first and second-order moment statistics. In the next pass, these statistics are combined to determine the best-fit plane parameters of rover-sized groups of cells throughout the terrain. Data derived from this fit (slope, residual, max elevation difference) determine the continuously-valued *traversability goodness* of the cell at the center of the patch. Next, arc paths from the rover's current map position are evaluated by

integrating goodness values along each arc. Finally, the arc with the highest evaluation is chosen as the next direction for the rover to follow (see Fig. 9).[9]

While a primary use of Hazcam range data is in support of autonomous navigation[8], Hazcam images are also used to plan operation of the Instrument Positioning System (IPS), which includes an extendible arm on which several science instruments are mounted. These instruments require precision placement onto targets of interest. The requirements include an approach to the target that differs from its actual surface normal by less than ±5°. Once the rover has been positioned such that a science target lies within the workspace of the arm, new Hazcam images are acquired; the front Hazcams provide the best view of the arm workspace. Once a target is identified, range data from stereo vision are processed to determine the surface normal at the sampling site. This is then used to plan motion of the arm to ensure appropriate contact at the sampling site.

4. SUMMARY

The MER mission rovers will carry a payload that includes nine cameras. These cameras provide both scientific and engineering functions. One of the scientific cameras, the Pancam also has an engineering function of solar imaging that is used to establish an inertially based coordinate system. The six engineering cameras that are mounted in stereo pairs (Hazcams and Navcams) are used for autonomously generating range maps of the surrounding area, for obstacle detection and avoidance, for navigation, and for traverse planning and general imaging.

5. ACKNOWLEDGEMENTS

The authors would like to thank Paul Karlmann for Figure 1 and Brian Cooper for his contribution of Figure 8 from the Mars Pathfinder 1997 mission.

The research described here was carried out at the Jet Propulsion Laboratory, California Institute of Technology, and was sponsored by the National Aeronautics and Space Administration. References herein to any specific commercial product, process or service by trademark, manufacturer, or otherwise, does not constitute or imply its endorsement by the United States Government or the Jet Propulsion Laboratory, California Institute of Technology.

[8] The MER navigation and path planning are described in more detail in references [8] and [9].

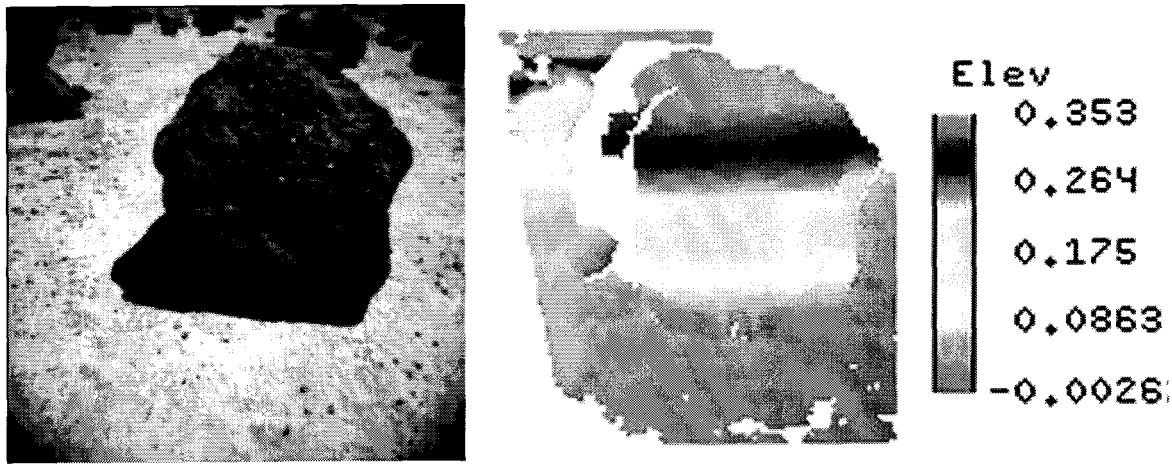

Figure 6: Stereo processing of boulder scene showing grayscale image from left camera and resulting elevation image [elevation in meters].

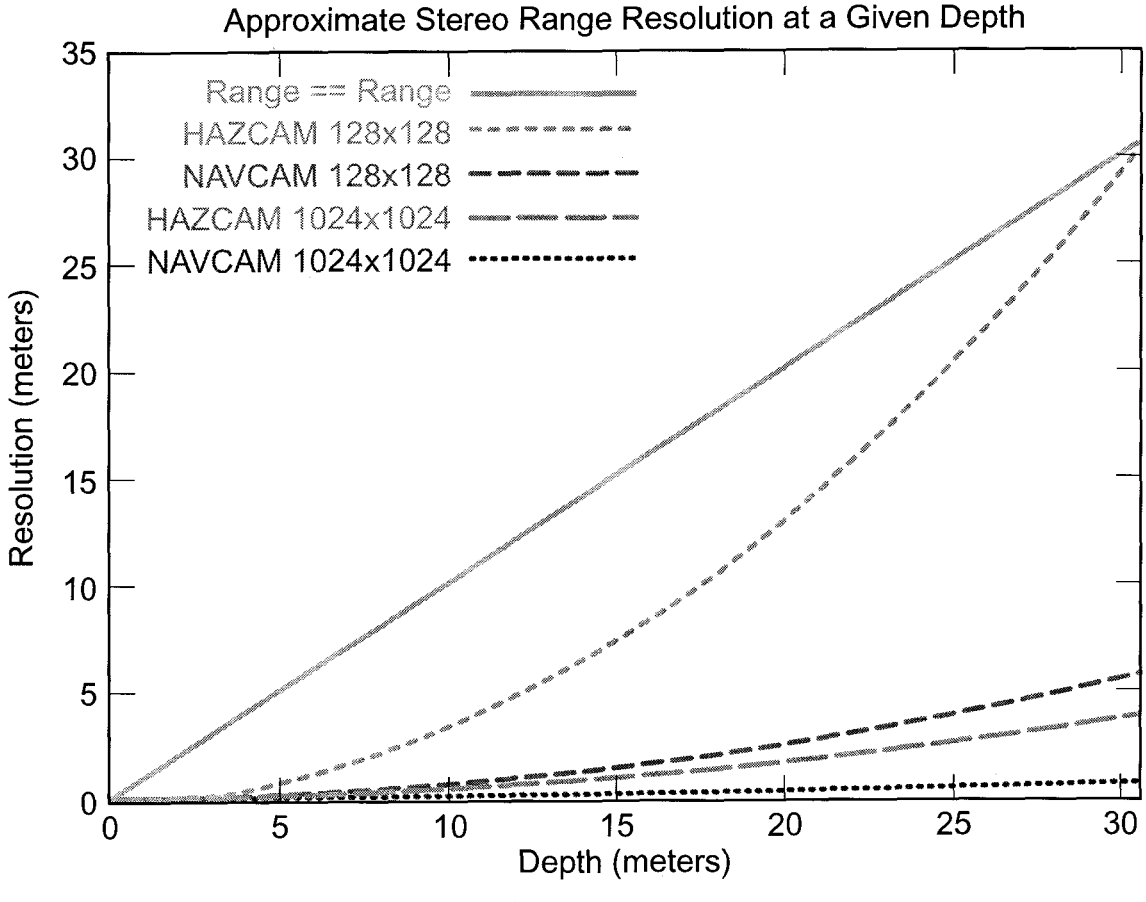

Figure 7: Stereo camera range resolution as a function of depth.

Figure 8: 3-D panorama for traverse planning.

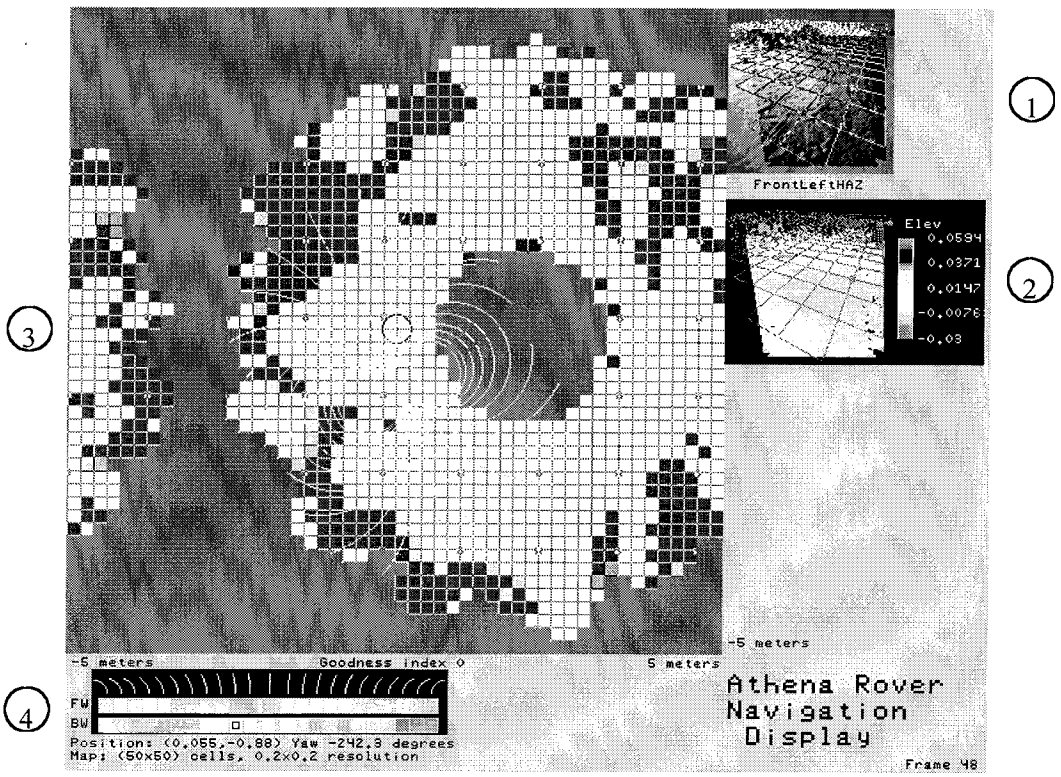

Figure 9: GESTALT navigation map showing: (1) rover view from the left Hazcam with grid superimposed, (2) elevation image corresponding to (1), (3) full occupancy grid with obstacles and possible steering arcs, and (4) ranking of possible headings showing best heading.

REFERENCES

1. G.H. Smith, E.C. Hagerott, L.M. Scherr, K.E. Herkenhoff: J.F. Bell III, "Optical Designs for the Mars '03 Rover Cameras," to appear in Proceedings of SPIE, San Diego, July 2001.
2. M.D. Shuster, S.D. Oh, "Three-axis attitude determination from vector observations," *J. of Guidance and Control*, **4**(1) pp. 70–77, Jan.–Feb. 1981.
3. B.R. Hancock, R.C. Stirbl, T.J. Cunningham, B. Pain, C.J. Wrigley, and P.G. Ringold, "CMOS Active Pixel Sensor Specific Performance Effects on Star Tracker/Imager Position Accuracy," Proceedings of SPIE, Vol. 4284, pp. 43–53, 2001.
4. A.R. Eisenman, C.C. Liebe, and R. Perez, "Solar Imaging with The Mars Exploration Pancams," to appear in the proceedings of the 2002 IEEE Aerospace Conference, Big Sky Montana, March 9–16, 2002.
5. Y. Yakimovsky and R. Cunningham, "A System for Extracting Three-Dimensional Measurements from a Stereo Pair of TV Cameras," *Computer Graphics and Image Processing*, **7**, pp. 195–210, 1978.
6. Donald Gennery, "Least-squares Camera Calibration Including Lens Distortion and Automatic Editing of Calibration Points," in *Calibration and Orientation of Cameras in Computer Vision*, A. Gruen and T.S. Huang, Editors, Springer Series in Information Sciences, Vol. 34, Springer-Verlag, July 2001.
7. Yalin Xiong and Larry Matthies, "Error analysis of a real-time stereo system," in *Computer Vision and Pattern Recognition*, pp. 1087–1093, 1997. http://www.cs.cmu.edu/~yx/papers/StereoError97.pdf.
8. Jeffrey Biesiadecki, Mark Maimone, and Jack Morrison, "The Athena SDM Rover: A Testbed for Mars Rover Mobility," in Proceedings of International Symposium on AI and Robotics Applications in Space (i-SAIRAS), June 2001. http://telerobotics.jpl.nasa.gov/people/mwm/sdm-mobility/sdm.pdf
9. Reid Simmons, Lars Henriksen, Lonnie Chrisman, and Greg Whelan, "Obstacle avoidance and safeguarding for a lunar rover," in AIAA Forum on Advanced Developments in Space Robotics, Madison, WI, August 1996. http://www.cs.cmu.edu/~reids/papers/AIAAobsAvoid.pdf