Approaches for Efficient Coupling of Lasers to Cassegrain-type Telescopes

H. Hemmati and N. Page

Jet Propulsion Laboratory
California Institute of Technology

Peak of Gaussian Beam is Clipped by the Secondary Mirror

- TEM_{00} Beams are most suited for laser-communications
- Most of the intensity is confined in the peak of the TEM'_{00}s Gaussian distribution

- Very compact (lightweight) telescopes are needed for deep-space use
- Compact Cassegrain telescopes have large diameter secondary mirrors

- Laser beam coupled through a telescope is the preferred scheme for long-range laser-communications
- 50% or more of the beam's intensity is lost due to vignetting by the secondary mirror and baffles

- Efficiency of subsystems is extremely critical to deep-space missions

H. Hemmati

Current Coupling Schemes

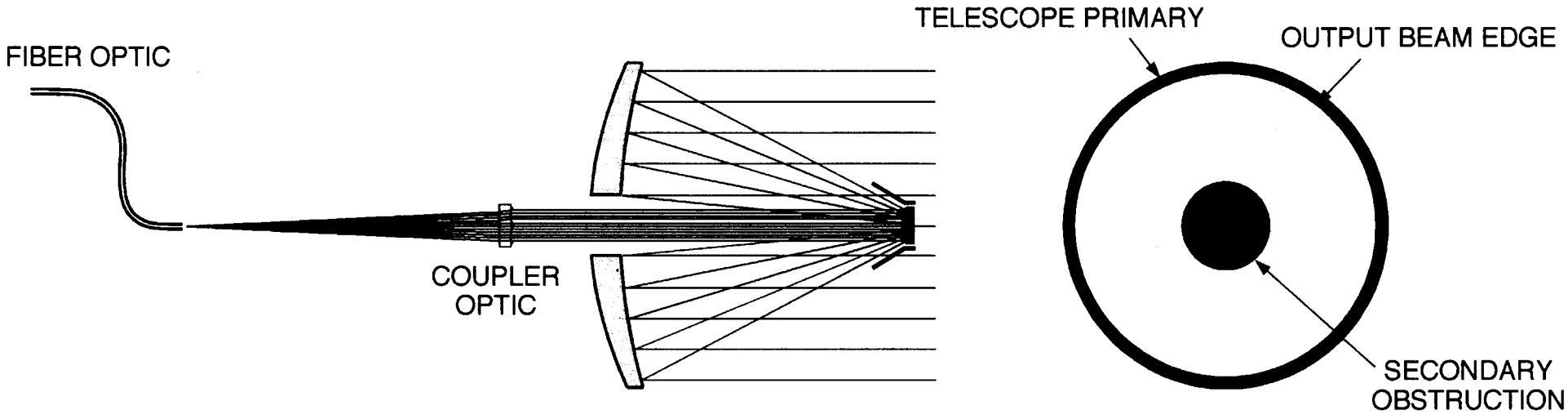

CASSEGRAIN TELESCOPE

OUTPUT BEAM

H. Hemmati

For Flight Systems Substantial Improvement in the Coupling Efficiency is Necessary

Efficient beam coupling schemes circumvent the secondary mirror obscuration and baffles

Analyzed merits of four different schemes (2 new and 2 known):

1. **An Axicon Optical Element (cone-shaped). proposed and demonstrated by Peters & Ledger (Applied Optics, V.9, p.1435, 1970)**

2. **Sub-Aperture Illumination**

3. **Beam-Slicer**

4. **Beam-Splitters**

H. Hemmati

Axicon Optical Element

- Utilizes conical surfaces
- Two identical cones with common axis, or
- Single cone surface with double reflection or double refraction

- Fabrication is challenging
- Very precise alignment with optical path is required

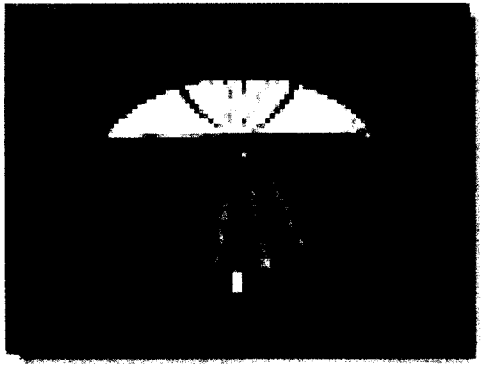

Axicon by:
Schafer Corp, Livermore, CA

Approach #1: Axicon Device

The Axicon produces a hollow beam that bypasses the secondary mirror obscuration.

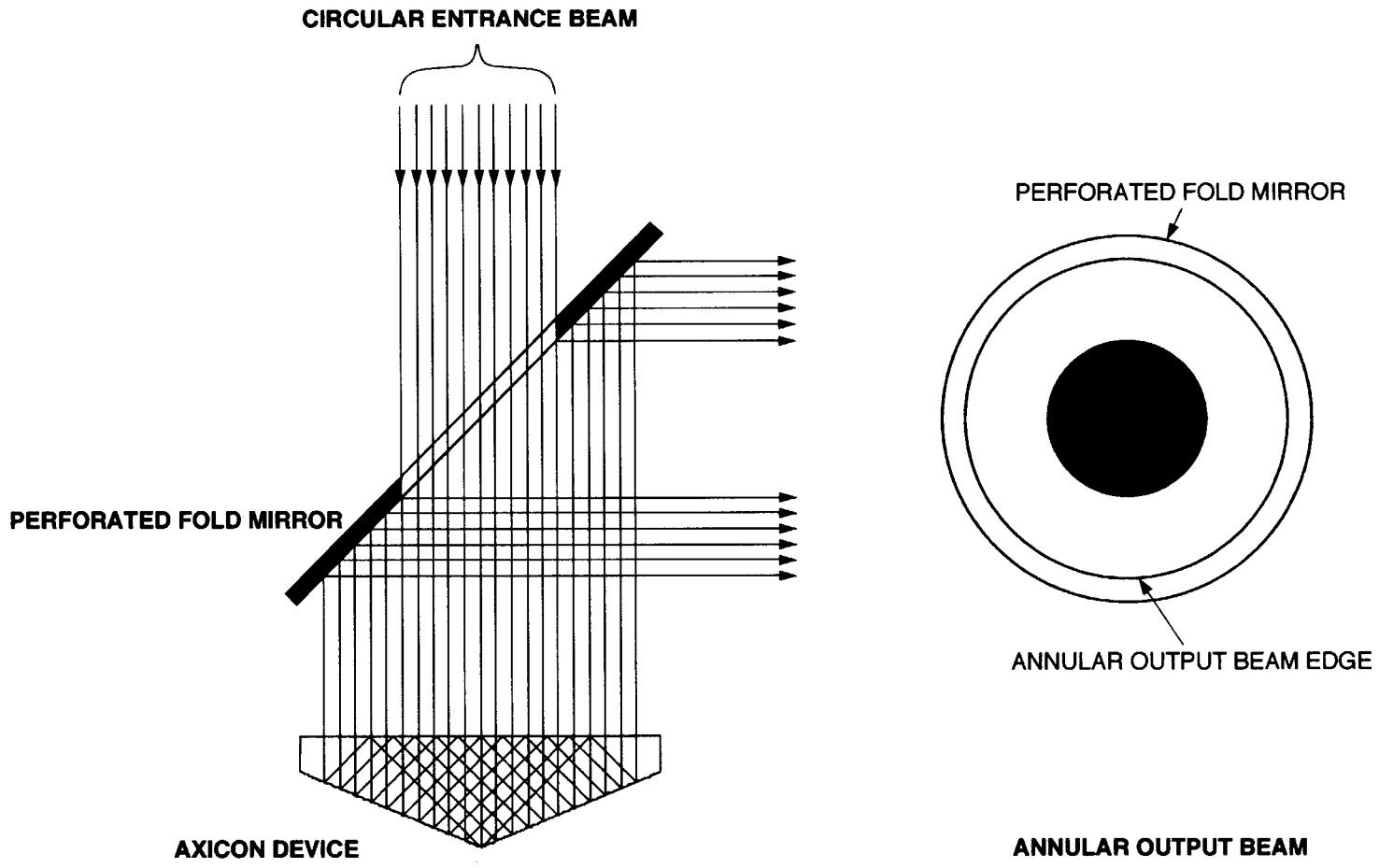

H. Hemmati

Implementation of Axicon Device

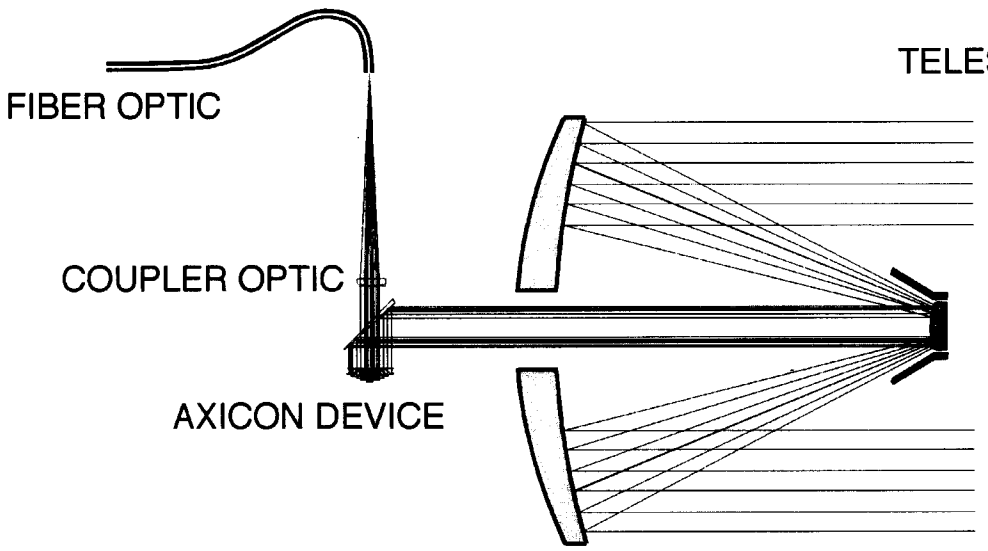

CASSEGRAIN TELESCOPE

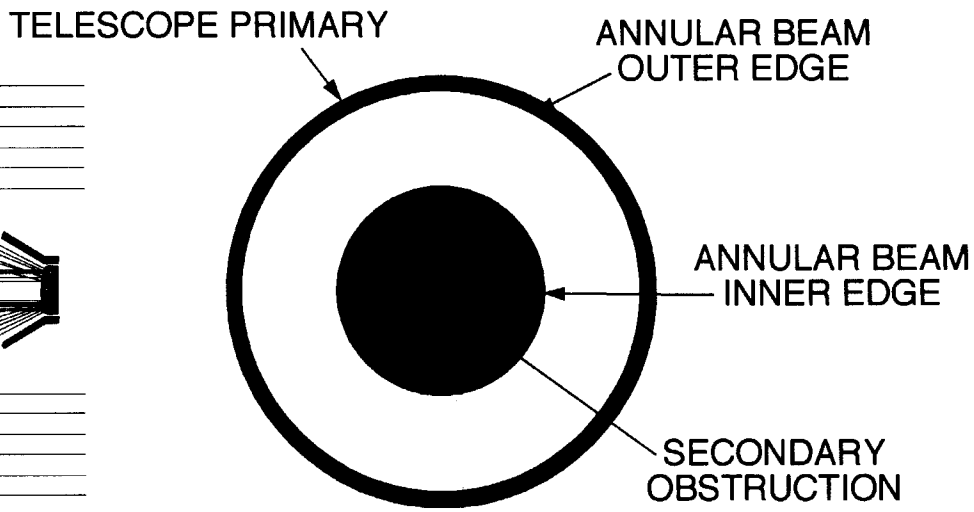

OUTPUT BEAM

H. Hemmati

The Intensity Profile

The intensity profile at the entrance and at the exit aperture of the Axicon device

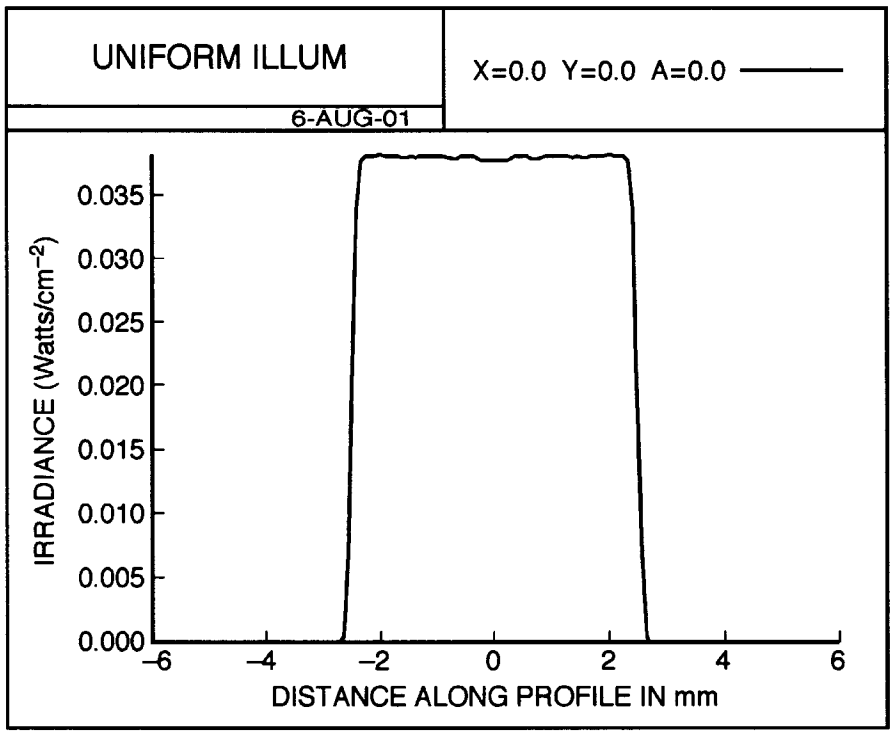

UNIFORM INPUT BEAM

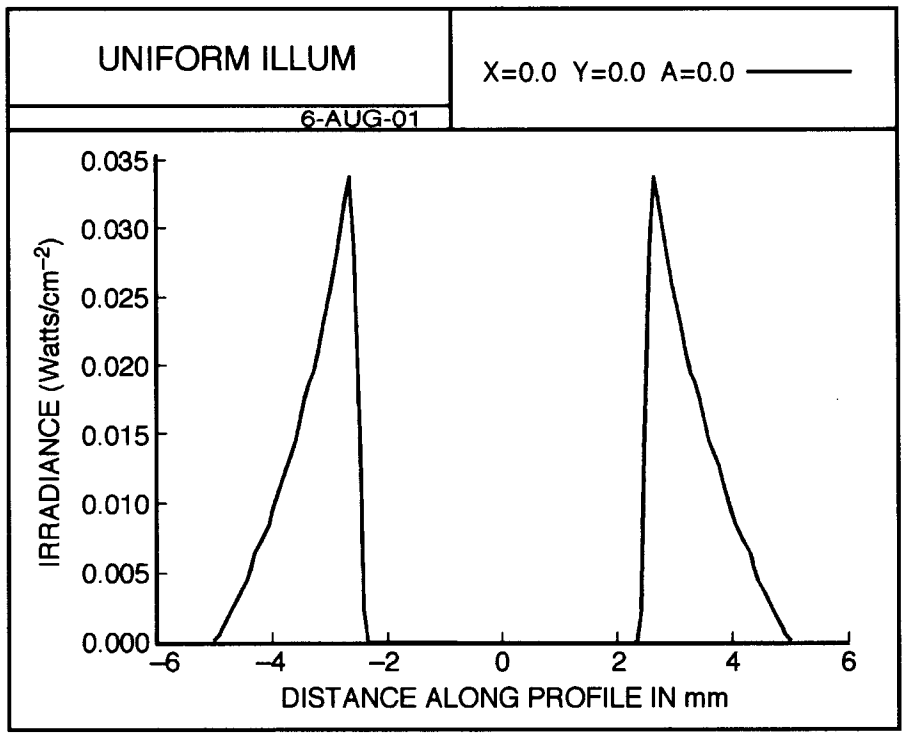

AXICON OUTPUT BEAM

H. Hemmati

Comparison of Approaches

If a Gaussian beam is passed through the Axicon, the intensity distribution of the existing beam will be altered such that the intensity will fall off both towards the inside and outer edges of the exiting annular beam. The exiting beam intensity profile will produce a far-field pattern that is quite Gaussian in appearance.

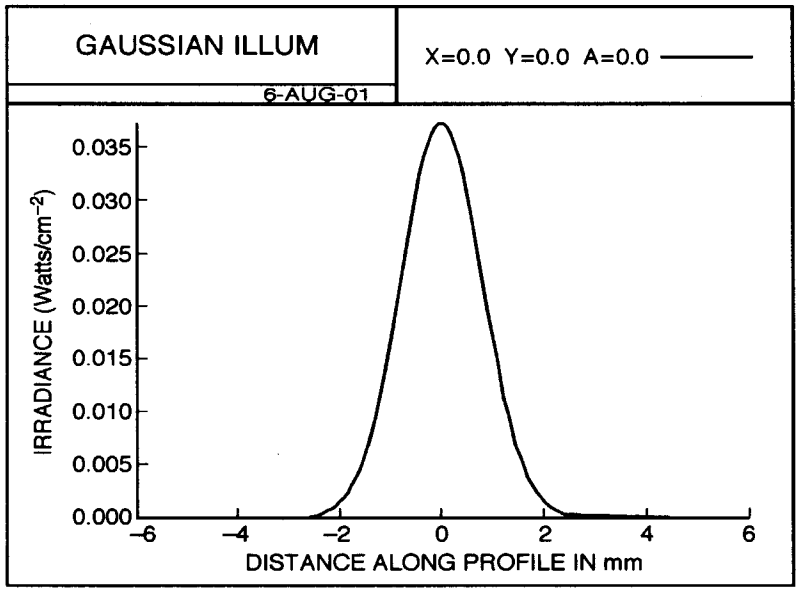

GAUSSIAN INPUT BEAM

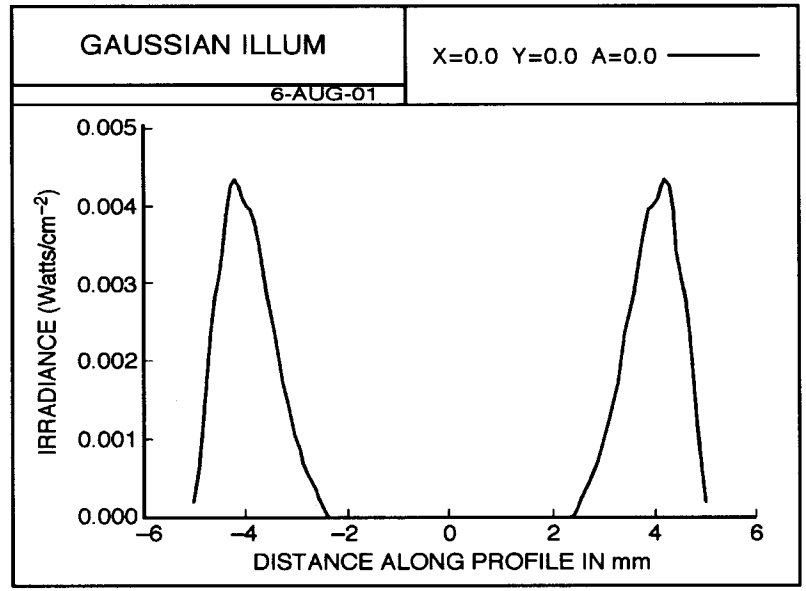

AXICON OUTPUT BEAM

H. Hemmati

The Far-field Pattern

The far-field pattern for a uniformly illuminated beam with and without the affects of the Axicon device

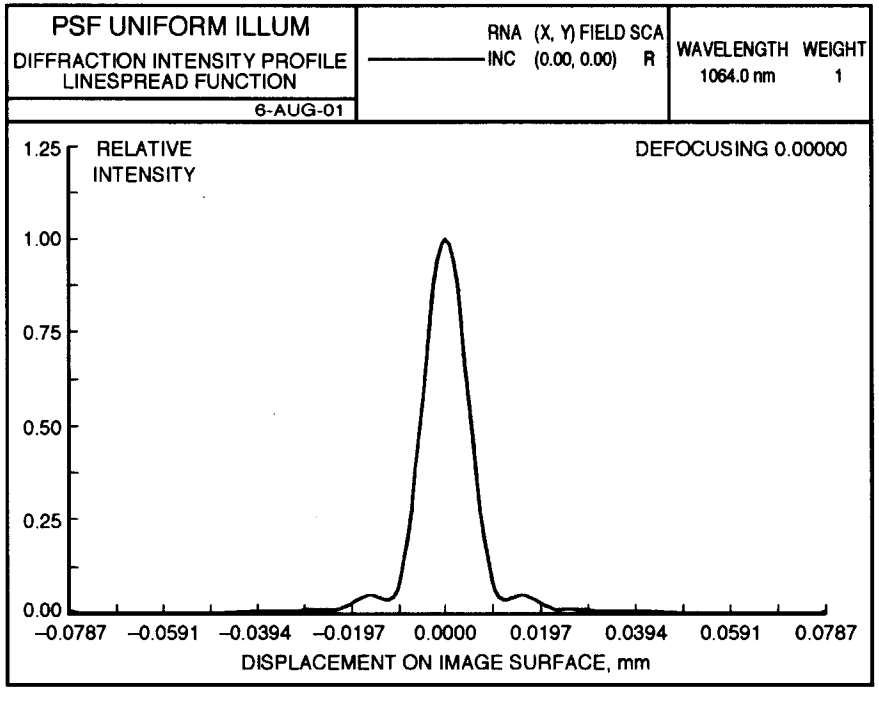

WITHOUT AXICON DEVICE

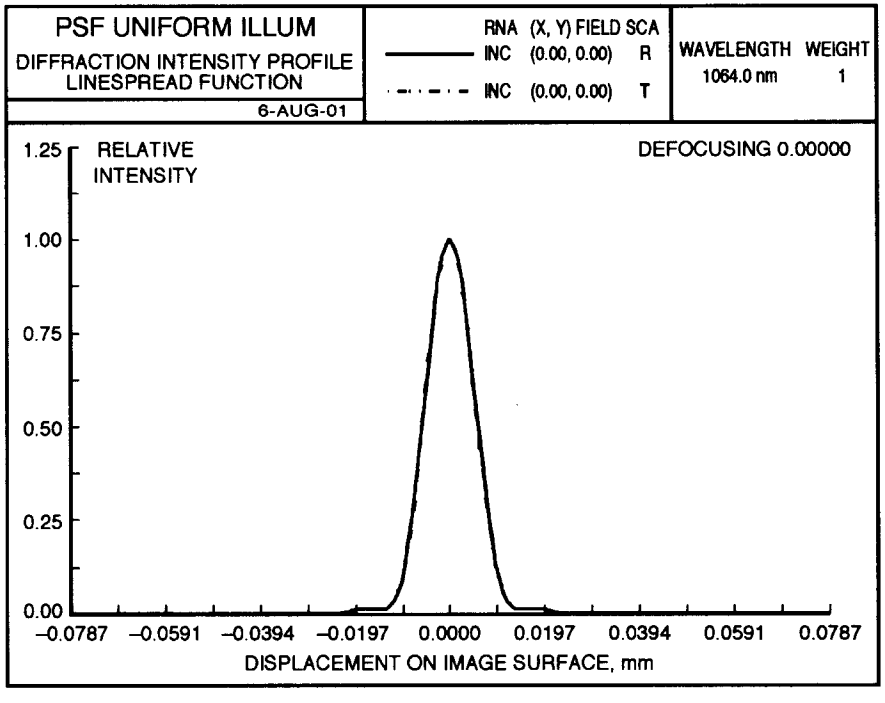

WITH AXICON DEVICE

H. Hemmati

Approach # 2: Sub-Aperture Illumination

In this simple approach, the transmit beam is coupled to the telescope so that it is sub-aperture and offset at the telescope aperture. The transmit beam will miss the secondary mirror and the baffles.

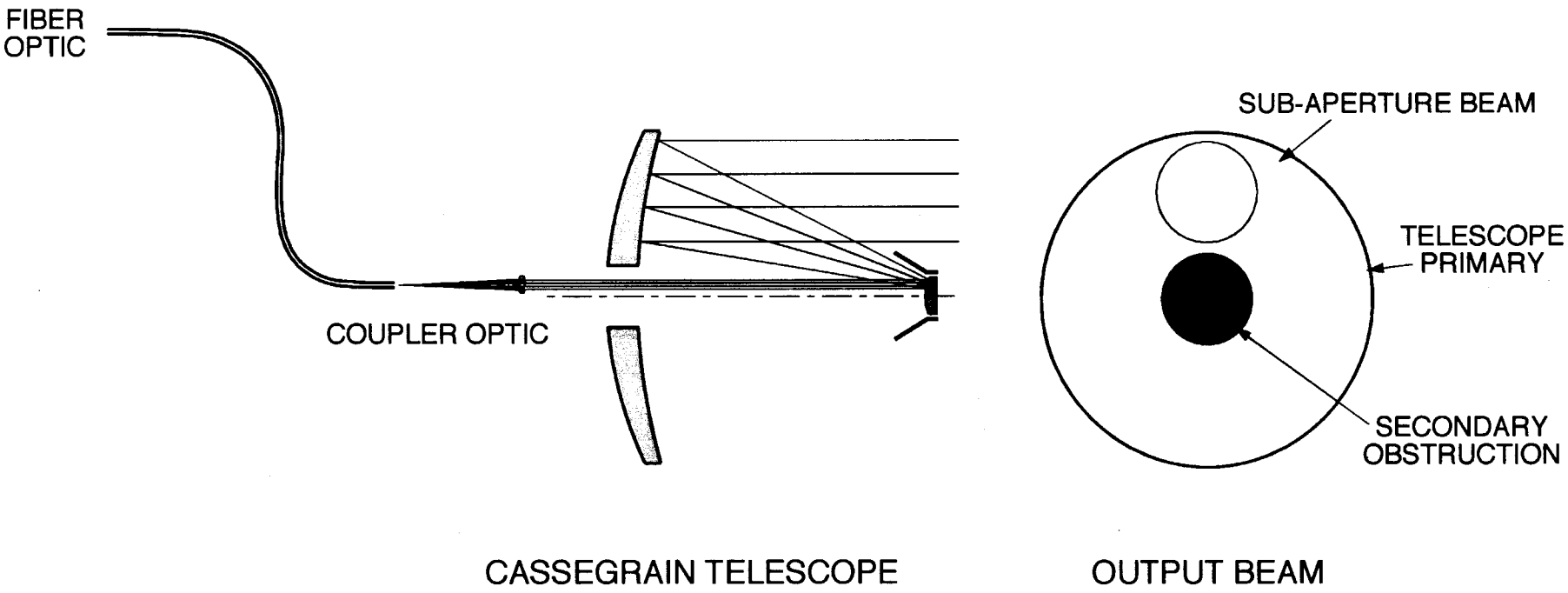

H. Hemmati

Sub-Aperture Illumination
- Far-Field Pattern -

This optical arrangement does not noticeably alter the far-field pattern

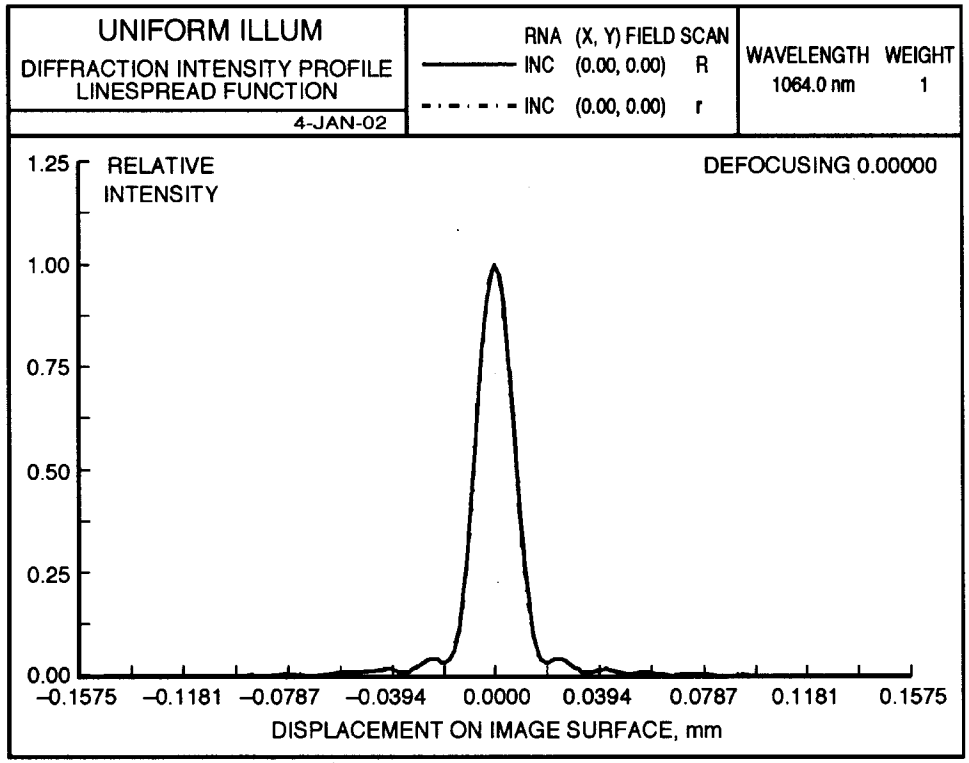

SINGLE SUB-APERTURE

H. Hemmati

Approach # 3: Beam Slicer

- Similar to Axicon in operation, but contains no curved surfaces (critical alignment requirement mostly alleviated)
- Slices the beam into two or more pie-shaped beams.
- Each beam is sub-aperture in size and can pass through the telescope without vignetting

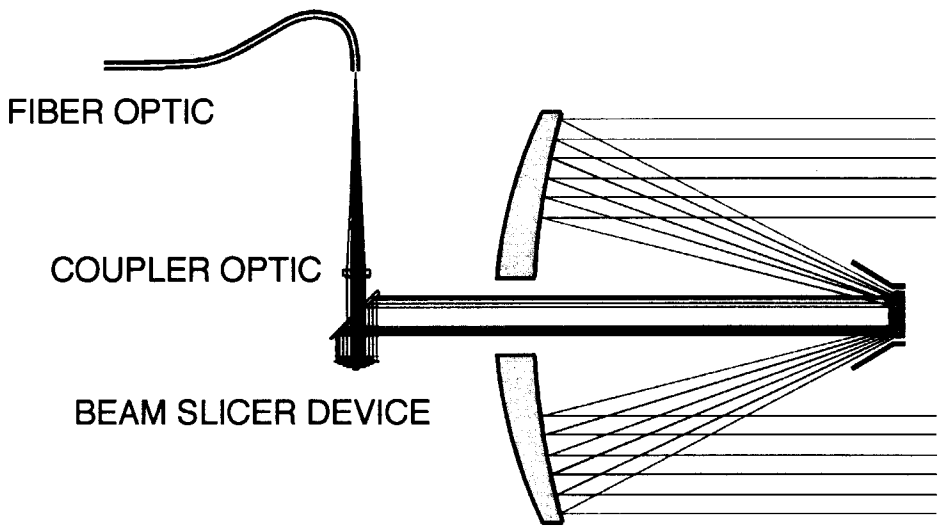

CASSEGRAIN TELESCOPE

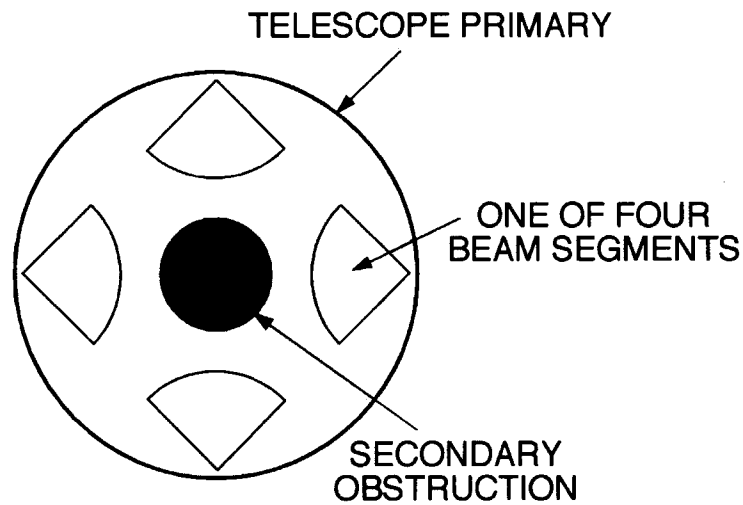

OUTPUT BEAM

H. Hemmati

Beam Slicer Device Layout

- Both an afocal refractor and reflector with multiple flat surfaces

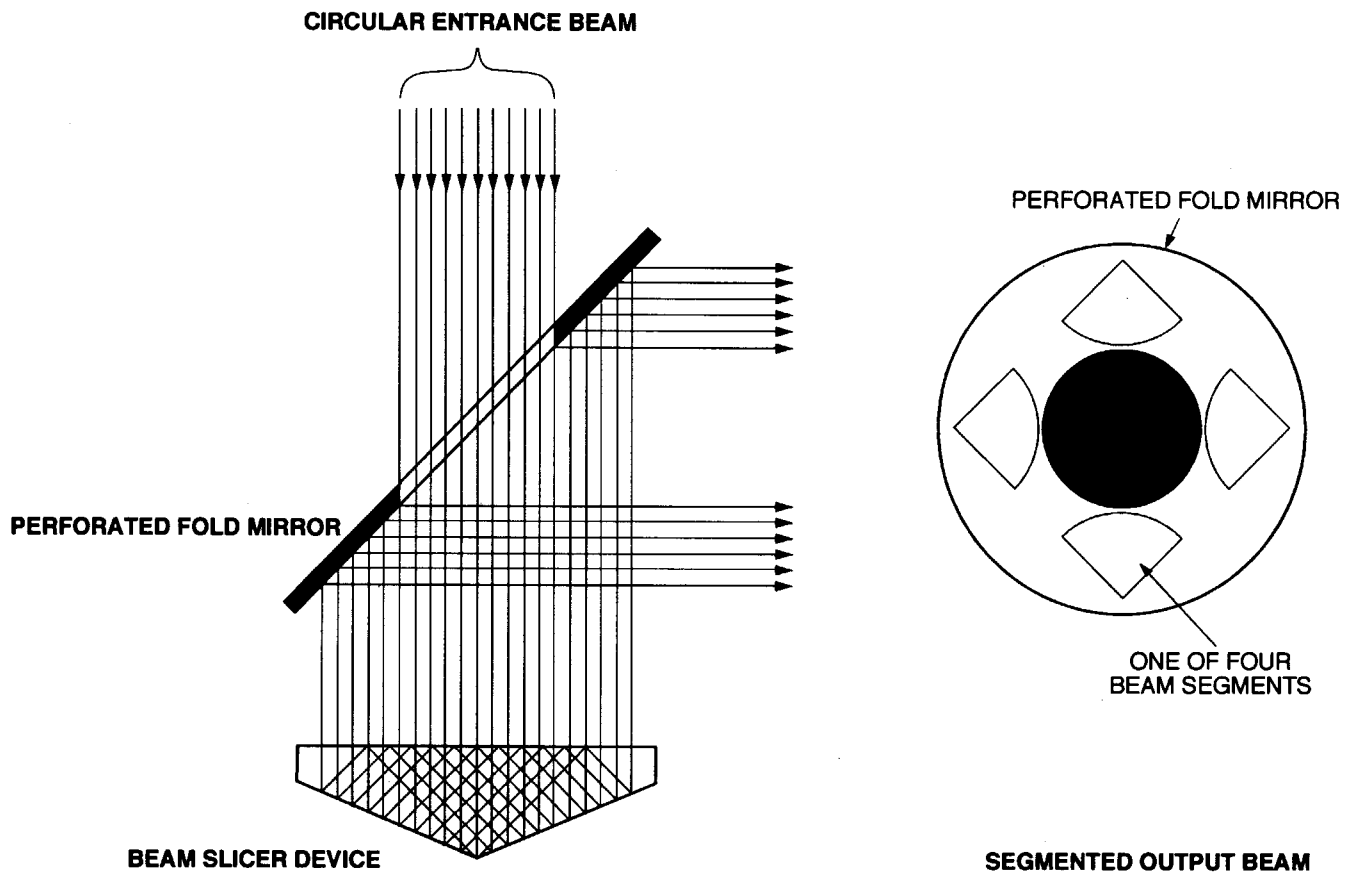

H. Hemmati

Beam-Slicer - Far-Field Pattern

The far-field pattern for a single beam is not symmetrical
The combined far-field pattern for four beams will be nearly symmetrical

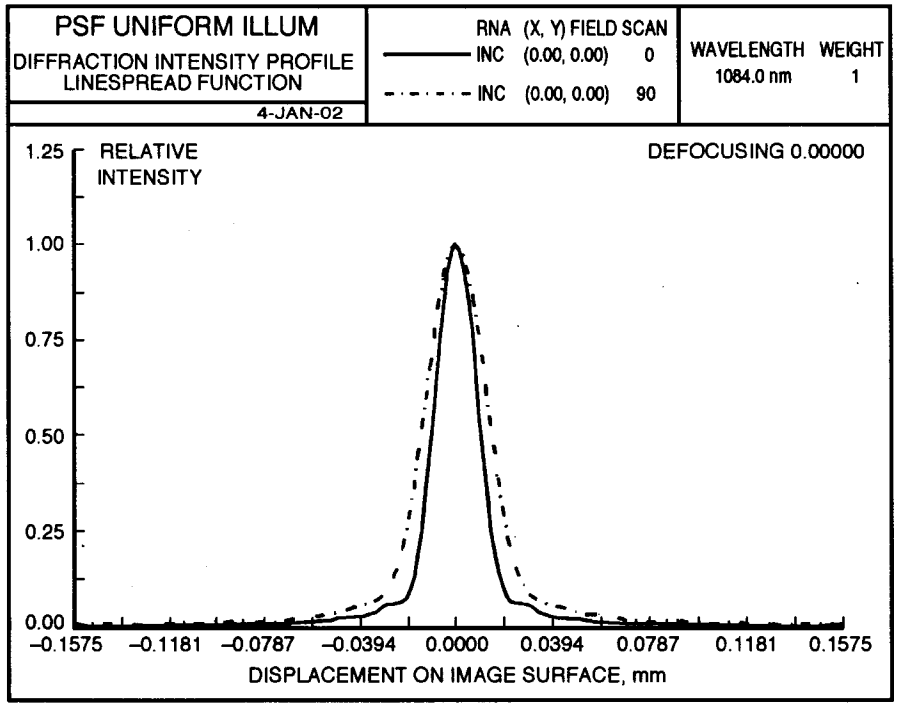

SINGLE BEAM

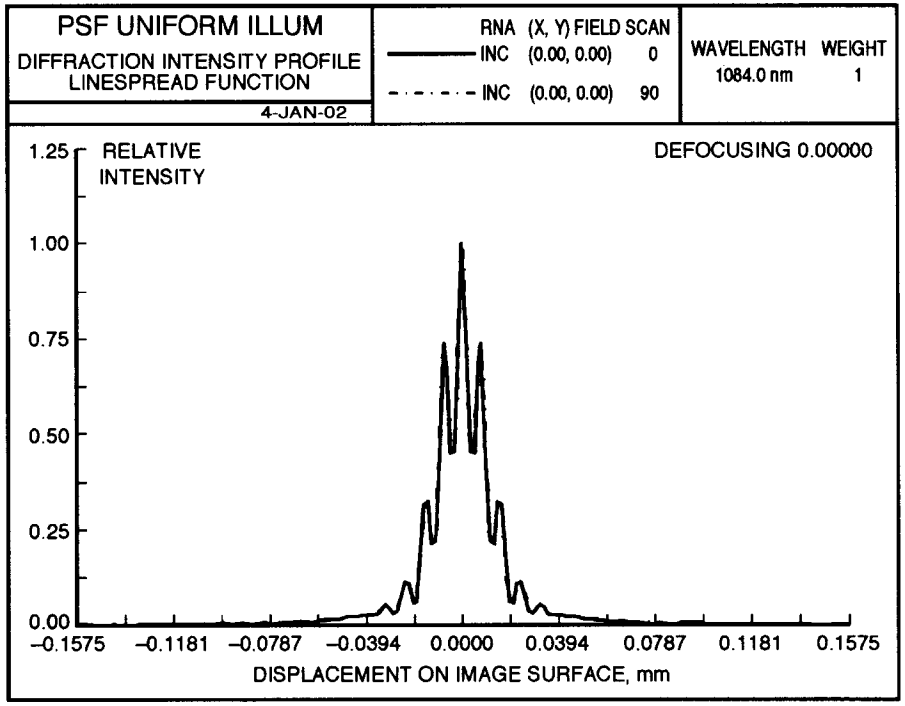

FOUR BEAMS IN PHASE

H. Hemmati

Approach # 4: Beam-Splitter / Prism-Combiner

This approach involves multiple beam-splitters and mirrors and therefore more losses are incurred than other approaches.

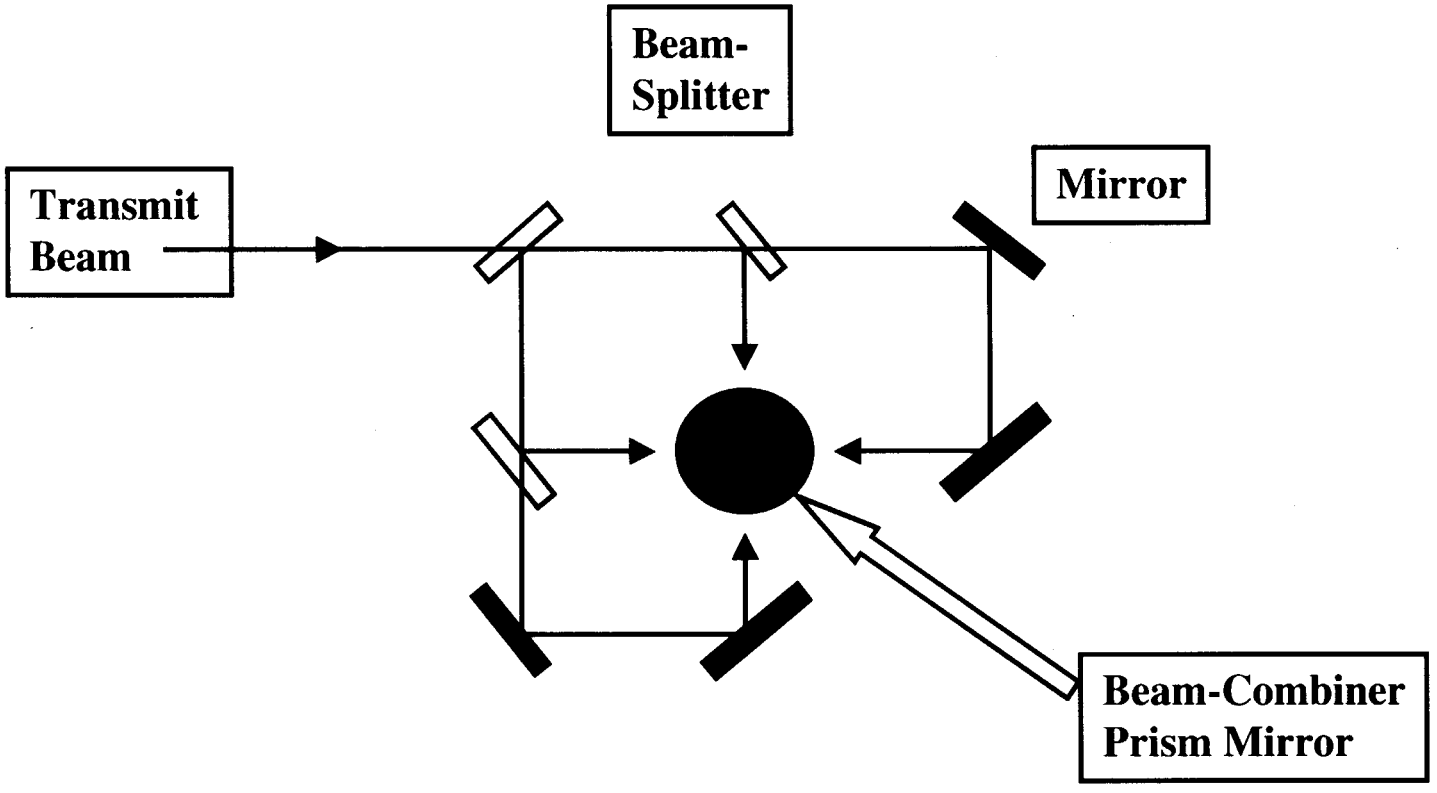

H. Hemmati

Beam-Splitter - Implementation

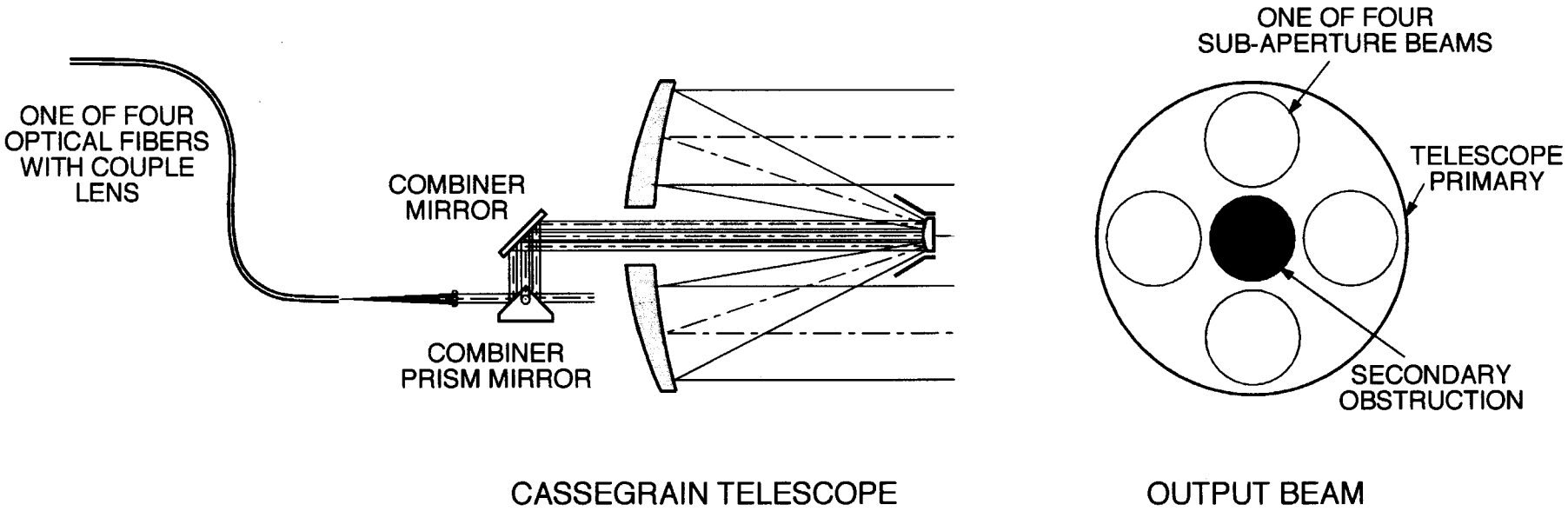

An application of the beam combiner is multiple transmitters that are ? **incoherent relative to each other.**

H. Hemmati

Beam-Splitter - Far-field pattern

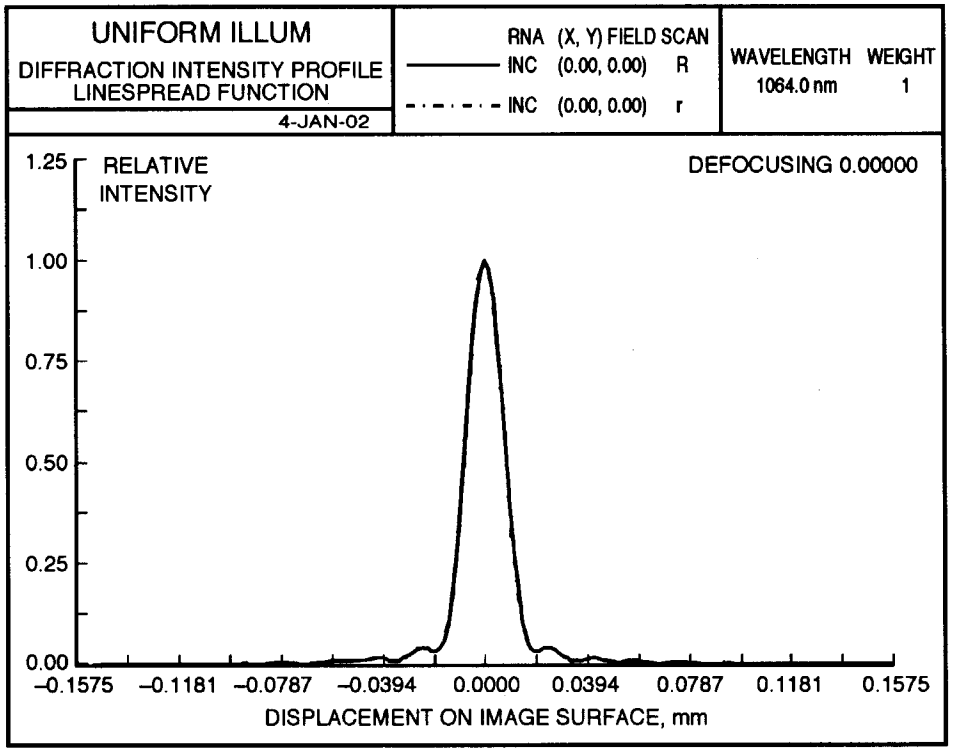

SINGLE BEAM OR FOUR BEAMS

H. Hemmati

Comparison of Approaches

Approach: / Characteristics:	Axicon (Conical)	Prism Beam Slicer	Sub-Aperture	Beam-Splitter
Fabrication complexity	High	Low	N/A	Medium
Alignment sensitivity	High	Low	Low	Low
Far-field pattern performance degradation	Low	Medium/Low	Low	Low
Effective transmittance	High	High	Highest	Medium/ High
Approach/Device field-of-view (FOV) limitation	Very small angles only	Telescope FOV	Telescope FOV	Telescope FOV
Overall improvement in antenna gain	High	High	High	Medium/ High

H. Hemmati