OPTICAL FREQUENCY STANDARD DEVELOPMENT IN SUPPORT OF NASA'S GRAVITY-MAPPING MISSIONS

W.M. Klipstein, M. Mohageg, J.A. White, and B.C. Young
klipstein@jpl.nasa.gov
Jet Propulsion Laboratory
California Institute of Technology
Pasadena, California, U.S.A. 91109

Abstract

We are developing frequency stabilized lasers in support of NASA's time-varying-gravity mapping missions. Small changes in the distance between spacecraft will be detected using interferometric techniques between two satellites with on-board stable lasers.

Introduction

We have begun constructing all-solid-state laser systems at 778 nm and at 532 nm in support of a satellite-based gravity-mapping mission tentatively planned to fly in 2007. In each case the lasers will be stabilized at short times to high-finesse Fabry-Perot cavities similar to those of Ref. 1. At longer times the 778 nm laser will be stabilized to the 2-photon transition in rubidium [2,3]. In the 532 nm system, a frequency-doubled Nd:YAG laser with a non-planar ring oscillator (NPRO) design will be frequency-locked to a molecular iodine line [4]. We intend to combine the exquisite performance over short time scales coming from a cavity reference with the long-term stability of an atomic frequency standard with an eye towards reliability in a spaceflight application. By developing two separate candidate systems with proven performance we intend to maximize the probability of success for this mission-critical system development.

Motivation

Space qualified, frequency stabilized lasers are being pursued actively to support a wide range of NASA missions and goals, including LISA, astrometry, optical communications, optical clocks, and fundamental physics. In order to support these various needs, the SUNLITE collaboration was formed between NASA Langley, Stanford University, the National Institute of

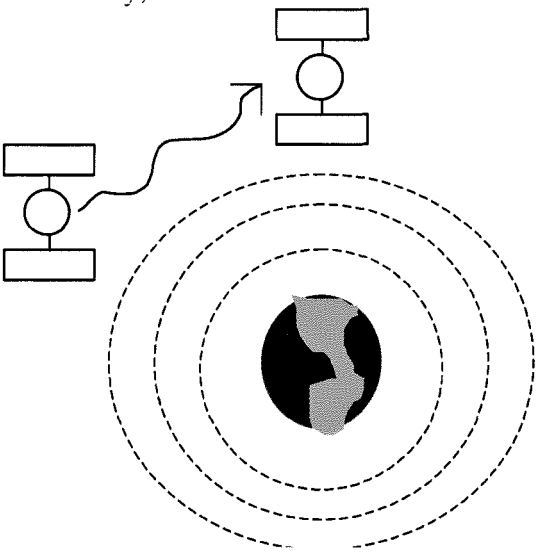

Figure 1 Changes in the mass distribution of the Earth are detected as changes in the relative spacing between two satellites in a low Earth orbit. In EX-5 the microwave source used for metrology in GRACE is replaced by a frequency stabilized laser.

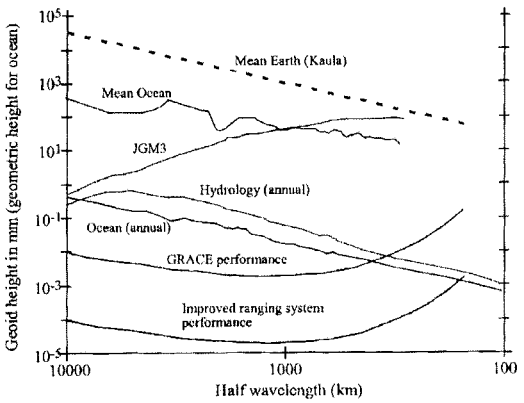

Figure 2 Contributions to the geoid from various sources as a function of length scale.[6] JGM3 is the current gravitational model of the Earth. Expected GRACE performance is shown, along with improved performance expected in EX-5.

Standards and Technology, and JILA, with the goal of developing Nd:YAG lasers stabilized to optical cavities. Work towards thermal and mechanical modeling for the cavity, optical bench design, and qualification of components have produced good short term performance, but insufficient long term stability as the cavity length drifted with time. In order to support projects needing both long term and short term performance, we have followed the path of using both cavity stabilization and the use of an atomic or molecular transition.

The EX-5 mission is a follow-on to NASA's Gravity Recovery and Climate Experiment (GRACE), which will map changes in the Earth's mass distribution due, for example, to changes in the polar ice caps, large aquifers, and major ocean currents over its five-year mission lifetime. [5] The map is generated by precise ranging between two satellites separated by 50-100 km and flying in a low earth polar orbit as shown in Figure 1. The GRACE metrology uses a microwave source derived from a 5 MHz quartz crystal oscillator specified to have Allan deviation $< 2 \times 10^{-13}$ from 1-100 s and $< 5 \times 10^{-13}$ out to 1000 s. The resolution of the metrology is expected to be limited by an on-board accelerometer as well as by oscillator noise. Improved performance of EX-5 will derive from an improved accelerometer design and an improved inter-satellite optical link. To support this improvement the lasers should have Allan deviation $< 1 \times 10^{-13}$ from 1-1000 s, but with the goal of significantly improved stability, carried out well beyond an orbit (5500 s). There is essentially no requirement on accuracy for these systems, provided the lasers on each spacecraft are close enough in frequency to make a useful beat note. Figure 2 shows contributions to the height of the geoid from a variety of sources as a function of spatial scale, including current gravitational models, the expected GRACE performance, and the improved performance from EX-5.

Benefits of Optical Frequencies

In any interferometric technique the phase of two different waves are compared as a measure of relative spacing between the sources. As shown in Figure 3, changes in the spacing on the order of the wavelength are naturally detected with such techniques, and the basic unit of length in an optical system is 10,000 times smaller than typical microwave wavelengths, amounting to a ruler with finer markings. Another significant advantage of short wavelengths is the dramatic reduction in diffraction effects, again scaling as the wavelength. Where microwaves readily diffract off of antennae and structures near the receiver, optical sources are by far more directional, with well defined sources and receivers and less multi-path degradation of the true signal. The

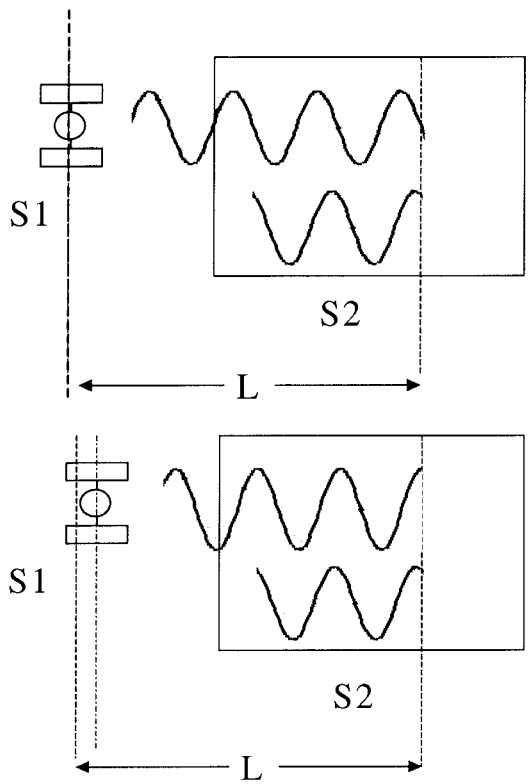

Figure 3 Metrology with light. Comparing the phase of the incoming wave with the reference on S2 measuers changes in the distance between two satellites. Top view: intersatellite distance L. Bottom view: intersatellite distance L-λ/4.

possibility of ranging directly to a test mass with an optical source adds additional appeal, as does the long-term stability of the source when referenced to an appropriate atomic or molecular transition.

Approach

Figure 4 shows results of some high-performance laser stabilization with a number of different systems. The data showing open circles and squares come from lasers stabilized to atomic or molecular transitions, while the closed points come from experiments locking a laser to a cavity. As can be clearly seen, cavity stabilization is typically used for applications requiring good short term performance, whereas measurements relying on accuracy or long term stability use an atomic reference. The needs of EX-5 are interesting in that they bridge the short and long times from Fig. 4 and the science return is expected to be enhanced by suppressing noise over most of this range.

We have chosen a dual approach to meeting the needs of EX-5 and other NASA missions with the intention of maximizing both the performance and versatility of the capabilities being developed at JPL. The requirements on lasers to support these missions include a minimum five-year lifetime and low power consumption, making solid state lasers most attractive. NPRO lasers offer excellent short term stability as well as reliable operation, although feedback bandwidth to these lasers is limited to 30 kilohertz. Fabry-Perot style diode lasers have much larger linewidths, but feedback bandwidths can be in the MHz range, allowing performance better than that

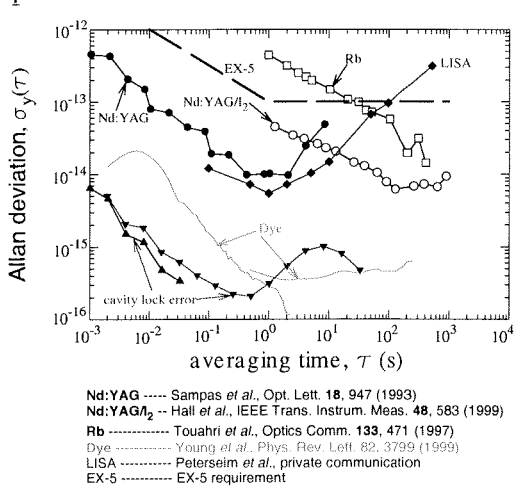

Figure 4 Fractional frequency instability of lasers. Open points are lasers stabilized to atomic transitions, closed points represent lasers referenced to cavities. The purple triangles demonstrate the fidelity of our cavity lock, though not the actual frequency stability of the laser.

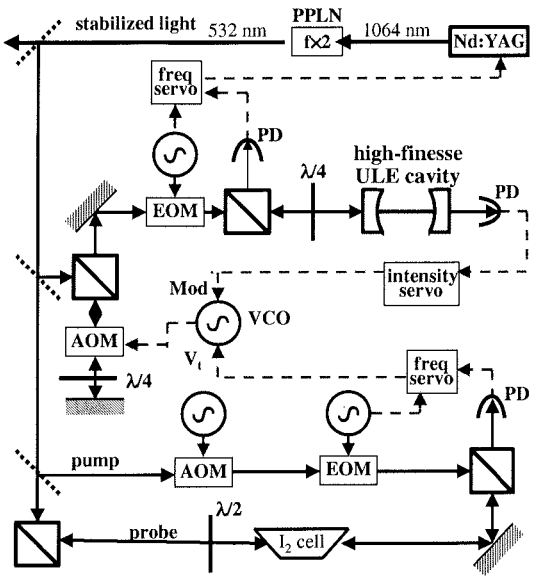

Figure 5. Design layout for frequency stabilization of the 1064 nm. The laser will be locked to an absorption line in molecular iodine. A 350 MHz AOM is used to frequency shift this light onto a cavity resonance for stabilization at short times.

demonstrated for the NPRO lasers at short times [7]. By offering two different technologies, and stabilization over either fast time scales, slow times scales, or both, we hope to support the maximum range of future users.

The primary focus in the first stage of development is an NPRO laser system, frequency-doubled and locked to both a high-finesse optical cavity and to molecular iodine, as shown in Fig. 5. The doubled (532 nm) light will be locked 40 MHz off of an iodine resonance using common saturated absorption techniques. A 350 MHz acousto-optic modulator (AOM) in a double pass configuration will be used to shift the 532 nm light onto a cavity resonance for fast stabilization of the Pound-Drever-Hall type. Frequency corrections below 1 Hz will be made to the Nd:YAG crystal oven temperature, while corrections out to 30 kHz will go to the PZT on the crystal.

Frequency doubling of the NPRO laser is done using a periodically poled lithium niobate (PPLN) crystal in a single-pass configuration as shown in Fig. 6. Theoretically the PPLN crystal in single pass gives 20 times the conversion efficiency of ordinary lithium niobate, with more typical performance being a factor of two less than this. The theoretical efficiency is also twice the efficiency of potassium niobate, with one-quarter the temperature sensitivity and 1/40 the angular sensitivity. We do slightly worse than optimal, getting approximately 2 mW of 532 nm light with a FWHM in temperature of 2 °C with 500 mW of 1064 nm light.

The scheme shown in Fig. 5 shows the 1064 nm light from the NPRO laser filtered out, and the 532 nm light is shown as the stabilized light to be sent to the spacecraft. Since most of the power from the NPRO remains in the fundamental, we intend to explore the possibility of using the 1064 nm light as the output to the spacecraft. One component of these tests will be to use a high-finesse optical cavity with mirrors coated for 1064 nm to look at the short-term behavior, and also to compare the 532 nm light that has been stabilized directly to iodine with light that has been doubled in an independent crystal.

The second system under development utilizes a grating-stabilized diode laser at 778 nm locked to a cavity,

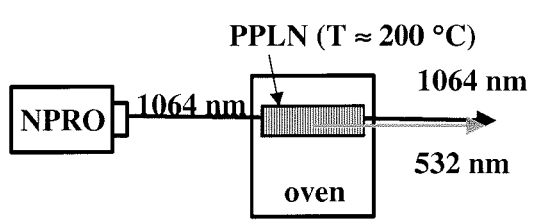

Figure 6. Frequency doubling using a periodically poled lithium niobate (PPLN) crystal.

as in the NPRO system, and also to a 2-photon transition in rubidium as in the literature [2,3]. Such systems have realized slightly worse performance than the iodine-stabilized NPROs, and the mechanically tuned laser may be difficult to qualify for long-term flight applications, so this system has been given lower priority than the NPRO. The benefit of increased feedback response (many MHz) may make them more attractive for applications interested predominantly in short term performance.

Results

We have focused to date mainly on locking the frequency-doubled NPRO laser to cavities at 532 nm. Figure 7 shows cavity ringdown measurements when the laser power was switched in approximately 1 μs with an acousto-optic modulator. From these measurements we conclude that our two cavities have linewidths of 6 and 9 kHz respectively, with finesses of 150,000 and 220,000, and quality factor Qs of 6 x 10^{10} and 9.2 x 10^{10}.

We then locked the laser to each of the two cavities separately. Figure 8

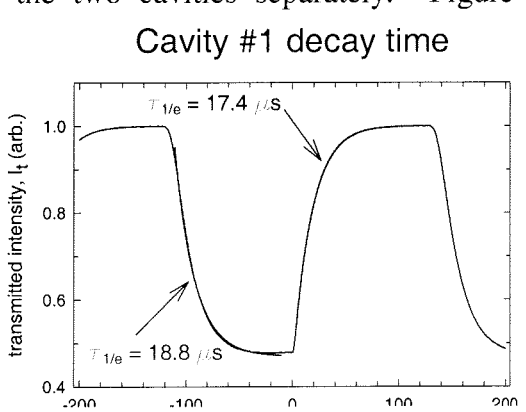

Figure 7 Cavity ring-down spectroscopy of high-finesse optical cavity at 532 nm. From these measurements we deduce the cavity linewidth, Finesse, and Quality factor as described in the text.

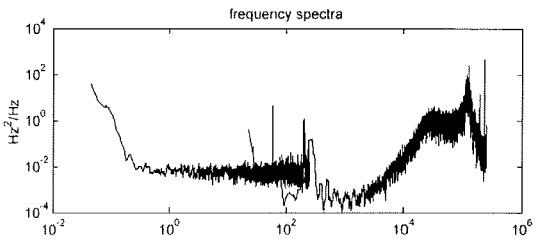

Figure 7 Frequency noise power measured from cavity error signal for locked laser.

shows power spectral density of frequency noise for the locked laser. The broad hump at 10^5 Hz is a resonance in the servo electronics, while the sharp spike to the right is a remnant from a switching power supply.

Referring back to Figure 8, the laser data is shown in terms of fractional frequency stability as described by the Allan deviation. Plotted for comparison are results achieved at other laboratories along with a measure of the basic EX-5 minimum requirement. Note that the performance shown by the purple triangles is a measure of how well the laser is locked to the cavity but is not a true measure of the frequency stability of the laser itself, as no effort had yet been made to limit mechanical vibrations in the cavity. These preliminary results are quite promising and demonstrate that our electronics are easily capable of meeting the needs of EX-5.

In addition to the cavity lock work, we have observed candidate iodine resonances for the frequency reference. On the 778 nm system we have observed the two-photon transition on the various hyperfine components of ^{85}Rb and ^{87}Rb. We will be locking to the iodine transition shortly and preparing independent systems to verify true laser frequency performance.

Over the course of this task, we intend to realize the promise coming from both short time and long time stabilization of the lasers in a compact

design not relying on large optical tables suspended from surgical tubing, such as is used in the highest performing systems [1]. Rather, portable systems and sub-modules will be developed as a lead in to developing devices that could be flown on a spacecraft.

Acknowledgements

The authors are grateful to Chuck Greenhall for analyzing the data on performance of the cavity lock and to Lute Maleki for suggesting improvements to the manuscript.

The research described in this paper was carried out at the Jet Propulsion Laboratory, California Institute of Technology, under a contract with the National Aeronautics and Space Administration.

References

[1]B.C. Young, F.C. Cruz, W.M. Itano, and J.C. Bergquist, "Visible Lasers with Subhertz Linewidths," *Phys. Rev. Lett.* **82**, 3799 (1999).

[2]D. Touahri, *et al.*, "Frequency measurement of the $5S_{1/2}(F=3)$ – $5D_{3/2}(F=5)$ two-photon transition in rubidium," *Opt. Commun.* **133**, 471 (1997).

[3]J.E. Bernard, *et al.*, "Absolute Frequency Measurement of a laser at 1556 nm locked to the $5S_{1/2} - 5D_{5/2}$ two-photon transition in ^{87}Rb," *Opt. Commun.* **173**, 357 (2000).

[4]J.L. Hall, *et al.*, "Stabilization and Frequency Measurement of the I2-Stabilized Nd:YAG Laser," *IEEE Trans. Instrum. Meas.* **48**, 583 (1999).

[5]http://www.csr.utexas.edu/grace.

[6]M. Watkins, W.M. Folkner, S. Buchman, and B. Tapley, "EX-5: A laser interferometer follow-on to the GRACE mission," GGG Conference (Banff, Canada, 2000).

[7]Oates, *et al.*, "Stabilization and Frequency Measurement of the I2-Stabilized Nd:YAG Laser," *Opt. Lett.* **25**, 1603 (2000).