NASA Space Cryocooler Programs—An Overview

R.G. Ross, Jr.[†] and R.F. Boyle[*]

[†]Jet Propulsion Laboratory
California Institute of Technology
Pasadena, CA 91109

[*]NASA Goddard Space Flight Center
Greenbelt, MD 20771 USA

ABSTRACT

Mechanical cryocoolers represent a significant enabling technology for NASA's Earth and Space Science Enterprises. An overview is presented of ongoing efforts at the Jet Propulsion Laboratory and Goddard Space Flight Center in support of current flight projects, near-term flight instruments, and long-term technology development. Highlights of the past year include the launch into space of three new cryocooler systems aboard NASA missions: 1) a Sunpower 80 K Stirling cooler on the RHESSI gamma-ray spectrometer spacecraft launched February 5, 2002, 2) an 80 K Creare turbo-Brayton cooler added to the NICMOS instrument during the Hubble Space Telescope servicing mission of March 1-12, 2002, and 3) a pair of TRW 55 K pulse tube coolers on the AIRS instrument aboard the EOS Aqua platform launched May 4, 2002. In addition, a major NASA cryocooler development initiative referred to as the Advanced Cryocooler Technology Development Program (ACTDP) was kicked off with four parallel industry contracts in April, 2002. The ACTDP concepts are required to provide dual cooling at 6 K and 18 K and are focused at NASA low temperature applications.

INTRODUCTION

NASA programs in Earth and space science observe a wide range of phenomena, from atmospheric physics and chemistry to stellar birth. Many of the instruments require low-temperature refrigeration to enable use of cryogenic detector technologies, to improve dynamic range, or to extend wavelength coverage. Over the last two decades, NASA has funded cryocooler technology development in support of many projects, and has also taken advantage of coolers developed under Defense Department and commercial funding.[1] The largest utilization of coolers is currently in Earth Science instruments operating at medium to high cryogenic temperatures (50 to 80 K), reflecting the relative maturity of the technology at these temperatures. However, in support of studies of the origin of the universe and the search for planets around distant stars, interest has peaked in systems of low temperature refrigerators providing cooling down to 100 mK. NASA's development of a 20 K cryocooler for the European Planck spacecraft and its new Advanced Cryocooler Technology Development Program (ACTDP) for 6-18 K coolers are examples of the thrust to provide low temperature cooling for this class of missions.

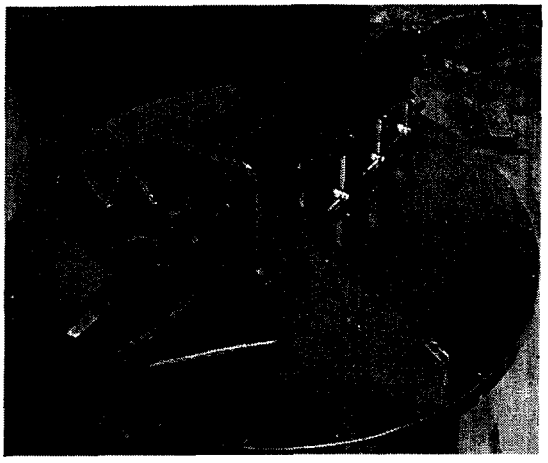

Figure 1. Sunpower M77B Stirling cryocooler integrated into the HESSI radiator structure.

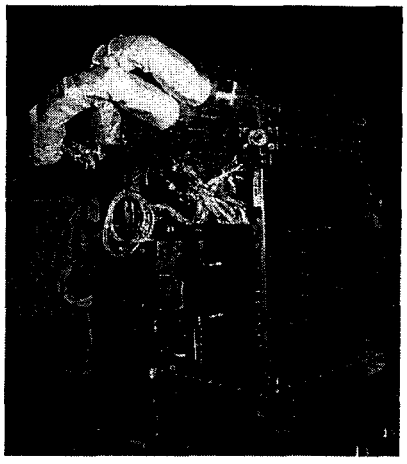

Figure 2. The NICMOS Cooling System, integrated for the HST Orbital System Test.

COOLERS ON NEAR-TERM EARTH AND SPACE SCIENCE MISSIONS

During the past few months we have seen three new cryocooler systems launched to support NASA missions. Two of the three are based at least partially on the Oxford cooler technology that first flew on the ISAMS instrument in 1991; this type of cooler has demonstrated the potential for multi-year lifetime, and has been adopted by many long-life instruments to enable new and improved science. The third cooler, the NICMOS cooler, is the first space application of a turbo-Brayton cooler.

These recently launched coolers, which are reviewed below, build upon the coolers of earlier NASA missions, such as those on the ISAMS, MOPITT and Hyperion instruments that have been described previously.[2] Additional coolers, such as the TRW pulse tube coolers on the TES instrument and the Ball Aerospace Stirling cooler on the HIRDLS instrument, are in the queue for launch aboard NASA missions in the next couple of years and are also described below.

RHESSI Gamma-Ray Spectrometer

The Ramaty High-Energy Solar Spectroscopic Imager (RHESSI) uses an array of nine large germanium gamma-ray detectors to observe solar flares from 3 keV to 25 GeV. The detector array is cooled to 75 K by a Sunpower M77B Stirling cooler (Fig. 1) running at 65 K.[3,4] Additionally, the cooler uses a heat intercept strap clamped to the Stirling coldfinger to provide simultaneous cooling to the instrument's higher temperature radiation shields at 155 K. This technique thus provides the capability of a two-stage cooler with an off-the-shelf single-stage cooler.

Launched in February 2002, the cooler is maintaining the gamma-ray detectors at their required 75K temperature, with a goal of continuing to gather science for up to two years on orbit.[5] This mission also represents the first attempt to use a low-cost commercial cooler to achieve multi-year operation in space.

NICMOS Cooling System

The Creare NICMOS Cooling System (NCS) was successfully launched and integrated into the Hubble Space Telescope during the HST's fourth servicing mission (SM3B) in March 2002.[6] This followed an earlier flight test of the entire cooling system aboard a week-long Shuttle mission in October 1998.[7] The NCS, shown in Fig. 2, is a large 400 W turbo-Brayton cooler with a nominal capacity of 7 W at 80 K and was designed to cool the Near Infrared Camera and Multi-Object Spectrometer (NICMOS) instrument of the Hubble Space Telescope. The NICMOS instrument was originally launched in 1997 using a solid Nitrogen dewar to cool its sensitive infrared focal plane. However, after a dewar failure led to a shorter than expected on-orbit life, the NCS was identified as a way to extend the mission and recover the original science objectives. Thus, the NCS was developed to be retrofitted to the NICMOS instrument during a subsequent

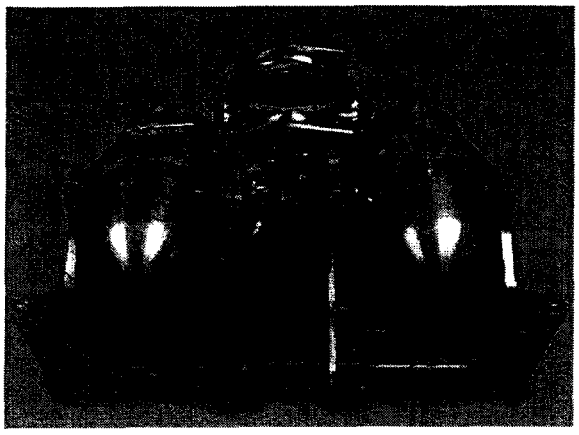

Figure 3. AIRS cooler system.

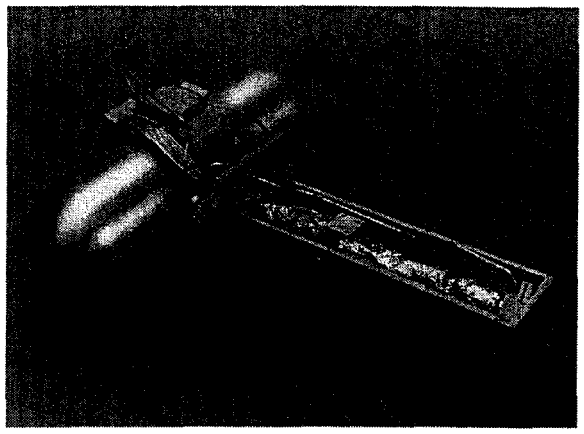

Figure 4. TES cooler system.

HST servicing mission in space.

The NCS is designed to maintain the instrument's detectors in the range of 75-85K by circulating refrigerated neon gas through the NICMOS dewar's existing liquid helium freeze lines. The very large (7 W at 80 K) heat load is associated with the inefficiencies of using existing in-space Bayonet couplings on the NICMOS dewar to connect with the gas lines.

To date, the system has performed flawlessly and the NICMOS instrument has been returned to its job of gathering infrared images of the far reaches of space.

Atmospheric Infrared Sounder (AIRS) instrument

Another recently-launched NASA instrument with cryocoolers is the Atmospheric Infrared Sounder (AIRS) instrument. This instrument measures atmospheric air temperature using a HgCdTe focal plane operating at 58 K and is cooled by a redundant pair of 55 K TRW pulse tube coolers.[8,9] Launched in May 2002 on NASA's Earth Observing System Aqua platform, the instrument was designed and built under JPL contract by Lockheed Martin Infrared Imaging Systems, Inc. (now BAE Systems IR Imaging Systems) of Lexington, MA.

Initiated in 1994, the cryocooler development effort was the first space application to select a pulse tube cryocooler. The highly collaborative development effort, involving cryocooler development at TRW and extensive cryocooler testing at JPL and Lockheed Martin, has served as the pathfinder for much of the pulse tube development to date. The AIRS flight pulse tube coolers, shown in Fig. 3, were originally delivered to JPL for testing in October 1997, and to the instrument for integration in January 1998. Since being launched in May 2002 the coolers have been performing flawlessly.[10]

TES Cooler Development

The next large cryogenic instrument presently under development at JPL is the EOS Tropospheric Emission Spectrometer (TES) instrument. TES is an infrared instrument designed to measure the state of the earth's troposphere. It is scheduled for launch into polar orbit aboard NASA's third earth observing systems spacecraft (EOS-Aura) in the 2004 timeframe.

TES uses two 57 K coolers to cool two separate focal planes to 62 K. The two coolers are identical and are a variant of the TRW AIRS pulse tube cooler, but configured with the pulse tube hard mounted to the compressor.[11,12] The coolers were fabricated by TRW under contract to JPL, and have recently completed integration into the overall TES instrument. The instrument is scheduled to be integrated onto the TRW spacecraft later this year.

HIRDLS Cooler Development

On the same spacecraft as the TES instrument, the High Resolution Dynamics Limb Sounder (HIRDLS) instrument uses a single-stage Stirling cryocooler manufactured by Ball Aerospace under contract to Lockheed Martin. The HIRDLS cooler, which provides 720 mW at 55 K for an

infrared array covering 21 bands between 6-17μm, uses technology developed under a number of NASA and DoD contracts.[13] It incorporates radial position sensors for establishing and monitoring the clearance seals in the cooler, prior to closeout of the housing. It is similar in design to a two-stage 30 K cooler delivered to GSFC in 1997, and life tested to 13,000 hours.

AMS-2 Charged-Particle Spectrometer

A set of four Sunpower M87 coolers has been baselined to fly on the Alpha Magnetic Spectrometer–2 (AMS-2) mission in October 2004. The instrument, mounted on the International Space Station, will use a large superconducting magnet assembly in a search for antimatter nuclei from cosmic sources. The coolers will be used to intercept heat at the outer thermal shield on a 2500 liter helium tank. With a mass of over 2000 kg for the superconducting magnets and helium tank, it is extremely challenging to provide enough thermal isolation to allow a 3-year lifetime, even with the coolers operating at nominal power. The four coolers, each capable of 6-7 W of heat lift at 77 K, will be run at reduced power to provide a total of 20-25 W of cooling on the shield @77 K. The coolers, operating in the stray field of the magnet system, will be specially qualified for operation in a magnetic field of 750-1000 gauss.

Planck Cooler Development

As a precursor to the US low-temperature cryocooler missions, JPL is presently working on the development of a 1 W at 18-20 K hydrogen sorption cryocooler for the Planck mission of the European Space Agency.[14] The objective of the Planck mission is to produce very high resolution mapping of temperature anisotropy in the cosmic microwave background (CMB) radiation.

Planck's Low Frequency Instrument (LFI) will have an array of tuned radio receivers based on High Electron Mobility Transistors (HEMTs) to detect radiation in the range 30-100 GHz. These receivers will be operated at a temperature of about 20 K. The High Frequency Instrument (HFI) will use bolometers operated at 0.1 K for frequencies from 100 GHz to 900 GHz.

The redundant hydrogen sorption cryocoolers are being designed to cool the LFI detectors to 18 - 20 K and to pre-cool the RAL 4 K helium J-T that cools the 0.1 K dilution refrigerators in the HFI cooling system. A successful test of the breadboard Planck sorption cooler was conducted in February 2002,[15] following significant development of the refrigerators compressor elements.[16] The flight coolers are currently in fabrication, with the qualification/flight #1 unit scheduled for delivery and instrument integration in early 2004, followed by the second flight unit a year later.

Other Applications

Another NASA application for space cryocoolers is in propulsion systems. NASA's Glenn Research Center and Ames Research Center are studying the use of cryocoolers to enable zero-boiloff storage of cryogenic propellants in space flight systems.[17,18] At the Johnson Space Center, the Variable Specific Impulse Magnetoplasma Rocket (VASIMR) project is designing a system that will use high-temperature superconducting coils for plasma containment and acceleration.[19]

CRYOCOOLER DEVELOPMENT FOR FUTURE NASA MISSIONS

Over the years, NASA has collaborated with the US Air Force to develop new cryocooler technologies for future space missions. Recent achievements include the NCS, AIRS, TES and HIRDLS cryocoolers described previously, and new smaller pulse tube coolers at TRW[20,21] and Lockheed Martin.[22,23] The largest technology push within NASA right now is in the temperature range of 4-10 K. Missions such as the Next Generation Space Telescope and Terrestrial Planet Finder plan to use infrared detectors operating between 6-8 K, typically arsenic-doped silicon arrays, with telescopes of greater than 5 m diameter. Other missions call for large aperture telescopes operating as low as 4 K. Constellation-X plans to use X-ray micro-calorimeters operating at 50 mK. Both NGST and TPF plan to passively cool their optics to 35 K, incorporating sophisticated sunshades and thermal isolation structures to minimize heat input, and incorporating large

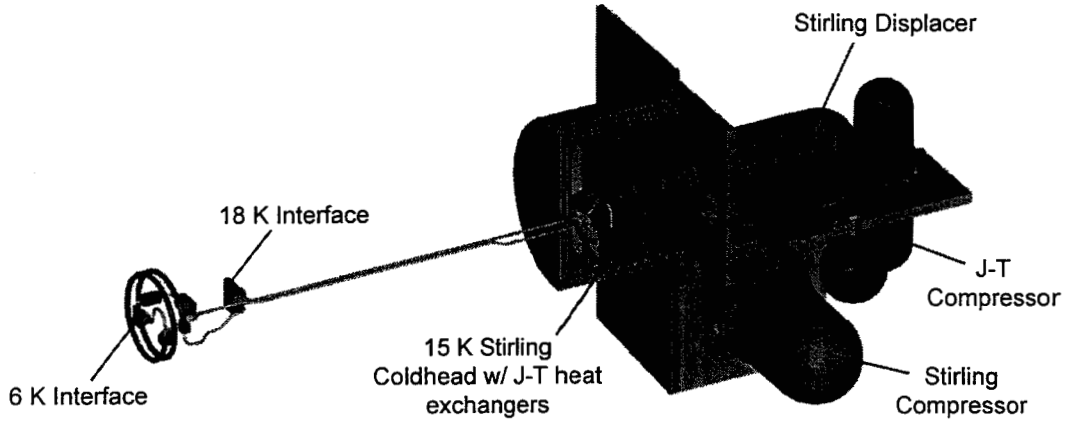

Figure 5. Ball Aerospace ACTDP Cryocooler Concept.

radiators to maximize heat rejection. This option is made possible by the orbits selected for these missions, well away from the thermally-disruptive presence of Earth.

Advanced Cryocooler Technology Development Program

To develop the needed cryocooler technology for this mission set NASA has initiated the Advanced Cryocooler Technology Development Program (ACTDP) under the leadership of JPL and in collaboration with the NASA Goddard Space Flight Center. Four contractors have initiated the first study phase of the ACTDP effort to develop cryocooler designs capable of realistically completing flight unit development and delivery in the 2006 to 2007 timeframe. Each of the coolers is designed to provide greater than 7.5 mW of cooling at 6 K together with an additional 250 mW at 18 K. The four contractors include:

- Ball Aerospace & Technologies Corp. of Boulder Colorado
- Creare, Inc. of Hanover, New Hampshire
- Lockheed Martin ATC of Palo Alto, California
- TRW Space and Electronics of Redondo Beach, California

The four concepts being pursued by these four contractors are summarized below. These concepts represent the starting point for the contractors studies and can thus be expected to evolve and be refined as the study phase progresses. It is planned that at least two of these concepts will be selected for fabrication of engineering model hardware starting in the fall of 2002.

Ball ACTDP Cryocooler Concept. As shown in Fig. 5, Ball Aerospace's ACTDP cryocooler concept utilizes a multistage Stirling refrigerator to precool a J-T loop powered by a linear-motion Oxford-style compressor. The J-T loop provides remote cooling of the 6 K and 18 K loads and isolates the loads from compressor-generated vibration and EMI. No intermediate radiative precooling is required, and the compressor elements are easily separated by over 3 meters from the cryogenic loads. The multistage refrigerator is based on leveraging existing Ball flight-quality Stirling compressors, J-T cold-end technology, and drive electronics; these technologies are configured and adapted to meet the specific needs of the ACTDP mission requirements. The baseline concept has a projected total system mass of 27 kg (including flight drive electronics) and has an estimated input power of approximately 150 watts into the drive electronics with no intermediate radiative precooling.

Creare ACTDP Cryocooler Concept. Creare's ACTDP cryocooler concept utilizes a multistage turbo-Brayton refrigerator with optional precooling by a cryoradiator. The turbo-Brayton loop, which has remotely located turbo-expanders operating at 6 K and 18 K, generates minimal vibration and allows the 6 K and 18 K loads to be widely separated from the loop's room-temperature compressor and electronics. The multistage refrigerator is based on leveraging existing Creare flight-quality turbo-Brayton compressors, expanders, and drive electronics as well as new developmental hardware aimed at low temperature operation.[24,25] These hardware elements are configured and adapted to meet the specific needs of the ACTDP mission requirements. The baseline

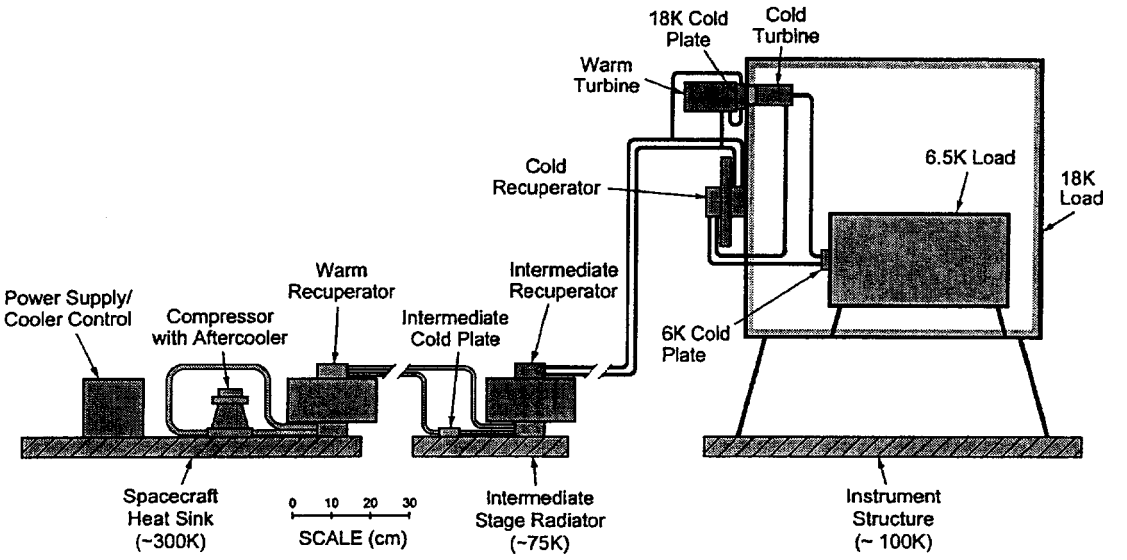

Figure 6. Creare turbo-Brayton ACTDP Cryocooler Concept.

concept, shown in Fig. 6, has a projected total system mass of 27 kg (including flight drive electronics) and has an estimated input power of approximately 105 watts into the drive electronics, with approximately 1.3 W dissipated at a 75 K intermediate-temperature radiator.

Lockheed Martin ACTDP Cryocooler Concept. Lockheed Martin's ACTDP cryocooler concept utilizes a multistage pulse tube refrigerator, with optional cryoradiator precooling, to directly cool the 6 K and 18 K loads. The single-unit multistage refrigerator leverages existing Lockheed flight-quality pulse-tube compressors, cold heads, and drive electronics, and laboratory pulse tube technology[26] that has demonstrated direct cooling down to 4K; these are being configured and adapted to meet the specific needs of the ACTDP mission requirements. The baseline concept, shown in Fig. 7, has a projected total system mass of approximately 26 kg (including flight drive electronics) and has an estimated input power of approximately 208 watts into the drive electronics when no intermediate radiative precooling is utilized. Use of a 120 K precooler dissipating 8 W is estimated to reduce the input power to on the order of 106 watts.

TRW ACTDP Cryocooler Concept. TRW's ACTDP cryocooler concept, illustrated in Fig. 8, utilizes a multistage pulse tube refrigerator, with optional cryoradiator precooling, to precool a J-T loop powered by a linear-motion Oxford-style compressor. The J-T loop provides remote cooling of the 6 K and 18 K loads and isolates the loads from any compressor-generated vibration

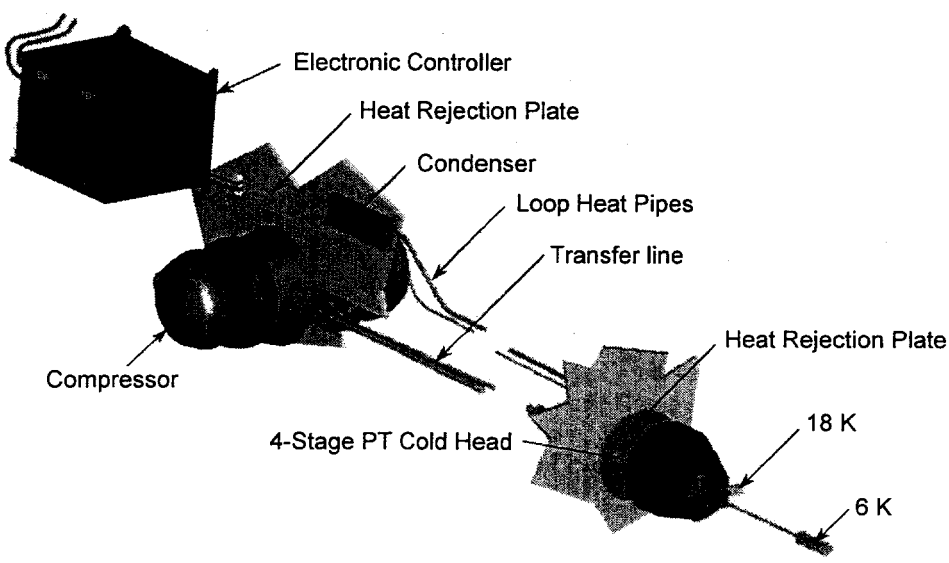

Figure 7. Lockheed Martin multi-stage pulse tube ACTDP cryocooler concept.

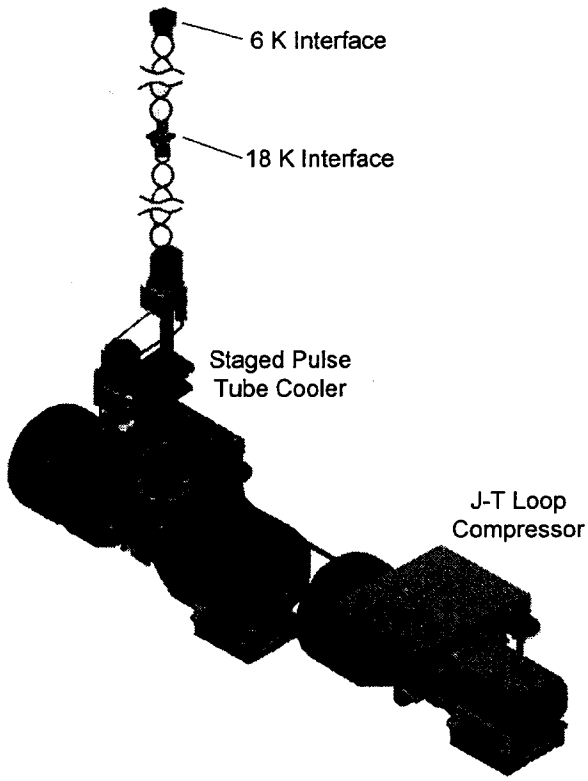

Figure 8. TRW ACTDP Cryocooler Concept.

and EMI. The multistage refrigerator is based on leveraging existing TRW flight-quality pulse tube compressors and drive electronics, and developmental J-T cold-end technology; these are configured and adapted to meet the specific needs of the ACTDP mission requirements. The baseline concept shown in the accompanying illustration has a projected total system mass of approximately 17 kg (including flight drive electronics) and has an estimated input power of approximately 207 watts into the drive electronics, with 2 W dissipated at the 85 K intermediate temperature radiator.

SUMMARY

Cryocoolers have finally come into flight usage in NASA science instruments. Flight coolers are available with a wide range of capabilities. NASA-funded technology development is now focusing primarily on 4-10K coolers.

REFERENCES

1 . Ross, R.G., Jr., "JPL Cryocooler Development and Test Program: A 10-year Overview," *Proceedings of the 1999 IEEE Aerospace Conference, Snowmass, Colorado*, Cat. No. 99TH8403C, ISBN 0-7803-5427-3, IEEE, New York, 1999, pp. 115-124.

2. Boyle, R. and Ross, R.G., Jr., "Overview of NASA Space Cryocooler Programs," *Adv. in Cryogenic Engin.*, Vol 47B, Amer. Inst. of Physics, New York, 2002, pp. 1037-1044.

3. Boyle, R., Banks, S., Cleveland, P. and Turin, P., "Design and Performance of the HESSI Cryostat," *Cryogenics* **39** (12), 1999, pp. 969-973.

4. Boyle, R. et al., *Cryocoolers for the HESSI Spectrometer: Final Report of the Cryocooler Tiger Team*, Internal Document, Goddard Space Flight Center, 2001.

5. Boyle, R., Banks, S. and Shirey, K., "Final Qualification and Early On-Orbit Performance of the HESSI Cryocooler," *Cryocoolers 12*, Kluwer Academic/Plenum Publishers, New York, 2003.

6. Swift, W.L., Dolan, F.X. and Breedlove, J.J., "Initial Operation of the NICMOS Cryocooler on the Hubble Space Telescope," *Cryocoolers 12*, Kluwer Academic/Plenum Publishers, New York, 2003.

7. Swift, W.L., et al., "Flight Test Results for the NICMOS Cryocooler," *Adv. in Cryogenic Engineering*, Vol 45A, Kluwer Academic/Plenum Publishers, NY, 2000, pp. 481-488.

8. Ross, R.G., Jr. and Green K., "AIRS Cryocooler System Design and Development," *Cryocoolers 9*, Plenum Publishing Corp., New York, 1997, pp. 885-894.

9. Ross, R.G., Jr., et al., "AIRS PFM Pulse Tube Cooler System-level Performance," *Cryocoolers 10*, Plenum Publishing Corp., New York, 1999, pp. 119-128.

10. Ross, R.G., Jr., "AIRS Pulse Tube Cooler System Level Performance and In-Space Performance Comparison," *Cryocoolers 12*, Kluwer Academic/Plenum Publishers, New York, 2003.

11. Raab, J., et al., "TES FPC Flight Pulse Tube Cooler System," *Cryocoolers 11*, Kluwer Academic/Plenum Publishers, New York, 2001, pp. 131-138.

12. Collins, S.A., Rodriguez, J.I. and Ross, R.G., Jr., "TES Cryocooler System Design and Development," *Adv. in Cryogenic Engin.*, Vol 47B, Amer. Inst. of Physics, New York, 2002, pp. 1053-1060.

13. Kiehl, W.C., et al., "HIRDLS Instrument Flight Cryocooler Subsystem Integration and Acceptance Testing," *Cryocoolers 11*, Kluwer Academic/Plenum Publishers, New York, 2001, pp. 769-774.

14. Cornut, M. and Gavila, E., "Planck Spacecraft Cryogenic Chain," *Cryocoolers 12*, Kluwer Academic/Plenum Publishers, New York, 2003.

15. Pearson, D., et al., "Test Performance of a Closed Cycle Continuous Hydrogen Sorption Cryocooler," *Cryocoolers 12*, Kluwer Academic/Plenum Publishers, New York, 2003.

16. Bowman, R.C., Jr., et al., "Evaluation of Hydride Compressor Elements for the Planck Sorption Cryocooler," *Cryocoolers 12*, Kluwer Academic/Plenum Publishers, New York, 2003.

17. Hastings, L. et al., "An Overview of NASA Efforts on Zero Boil-off Storage of Cryogenic Propellants," to be presented at 2001 Space Cryogenics Workshop, Milwaukee, WI.

18. Hedayat, A., et al., "Large Scale Demonstration of Liquid Hydrogen Storage with Zero Boiloff," *Adv. in Cryogenic Engin.*, Vol. 47B, Amer. Institute of Physics, Melville, NY, 2002, pp. 1276-1283.

19. Chang Dvaz, F. R., "Research Status of The Variable Specific Impulse Magnetoplasma Rocket," *Fusion Technology* 35, 1999, pp. 87-93.

20. Chan, C.K., Ross, R.G., Jr., et al., "IMAS Pulse Tube Cooler Development and Testing," *Cryocoolers 10*, Plenum Publishing Corp., New York, 1999, pp. 139-147.

21. Ross, R.G., Jr., "IMAS Pulse Tube Cryocooler Development and Testing," *Integrated Multispectral Atmospheric Sounder (IMAS) Instrument Technology Development and Demonstration, Final Report*, Internal Document, Jet Propulsion Laboratory, Pasadena, CA, 1998, pp. 3-1 to 3-16.

22. Ross, R.G., Jr., et al., "Gamma-Ray Pulse Tube Cooler Development and Testing," *Cryocoolers 11*, Kluwer Academic/Plenum Publishers, New York, 2001, pp. 155-162.

23. Nast, T.C., et al., "Miniature Pulse Tube Cryocooler for Space Applications," *Cryocoolers 11*, Kluwer Academic/Plenum Publishers, New York, 2001, pp. 145-154.

24. Swift, W., McCormick, J.A. and Zagarola, M.V., "A Low Temperature Turbo-Brayton Cryocooler for Space Applications," *Adv. in Cryogenic Engin.*, Vol. 47B, Amer. Inst. of Physics, Melville, NY, 2002, pp. 1061-1068.

25. Zagarola, M.V., et al., "Development of a Turbo-Brayton Cooler for 6K Space Applications," *Cryocoolers 12*, Kluwer Academic/Plenum Publishers, New York, 2003.

26. Olson, J., Nast, T. and Evtimov, B., "Development of a 10K Pulse Tube Cryocooler for Space Applications," *Cryocoolers 12*, Kluwer Academic/Plenum Publishers, New York, 2003.