Short-Range Inverse-Square Law Experiment in Space

Ho Jung Paik and M. Vol Moody
University of Maryland
College Park, MD 20742

Donald Strayer
JPL, Caltech
Pasadena, CA 91109

ABSTRACT

Newton's inverse-square law is a cornerstone of General Relativity. Its validity has been demonstrated to better than one part in thousand in ranges greater than 1 cm. The range below 1 mm has been left largely unexplored, due to difficulties associated with designing sensitive short-range experiments. However, the theoretical rationale for testing Newton's law at ranges below 1 mm has become very strong recently.

The Standard Model of particle physics, although highly successful, has one serious blemish: the so-called "strong CP problem." Peccei and Quinn developed a very plausible explanation for this phenomenon over two decades ago, but experimentalists have so far failed to verify it. One ramification of the theory is the prediction of the existence of a new particle, called the "axion," which mediates a short-range mass-mass interaction, as well as a force between intrinsic spin and mass. The axion is also a strong candidate for cold dark matter.

Another impetus for testing the law at the shortest ranges possible comes from string theories. In these theories, the n extra spacetime dimensions are compactified, leaving the observed 3+1 spacetime dimensions. For $n = 2$, the law of gravity changes from $1/r^2$ to $1/r^4$ as r is reduced to below the radius of compactification R. An intriguing possibility that $R > 1$ micrometer has been suggested recently, which would imply a violation of the inverse-square law at a level of 100 parts-per-million at a 100-micrometer distance.

The objective of ISLES (Inverse-Square Law Experiment in Space) is to perform a null test of Newton's law on ISS with a resolution of 10 ppm at distances ranging from 100 micrometers to 1 mm. This resolution presents an improvement by one million over the existing limits at 100 micrometers, and even greater improvement at shorter distances. ISLES will be sensitive enough to detect axions with the strongest allowed coupling and test the string-theory prediction with R greater than 300 nm. To reach this sensitivity, the existing superconducting accelerometer technology will be combined with advantages of the low-g environment of space.

The experiment will be cooled to below 2 K in LTMPF, which permits superconducting magnetic levitation in microgravity, allowing very soft, low-loss suspension of the test masses. The low magnetic damping, combined with a low-noise SQUID, leads to extremely low intrinsic noise in the detector. To minimize Newtonian errors, ISLES employs a near-null source, a circular disk of large diameter-to-thickness ratio. Two test masses, also disk-shaped, are suspended on the two sides of the source mass at a distance of 100 micrometers. The signal, the response of these two test masses to the gravity force of the source, is detected by a superconducting differential accelerometer, a highly sensitive gravity sensor.

Direct vibration coupling between the source and the detector is reduced by over 300 dB by combining the differential measurement with second harmonic detection. Through careful matching and alignment, the device achieves a very high degree of decoupling from seismic acceleration in all degrees of freedom. The residual acceleration errors will be compensated by using acceleration signals from six auxiliary superconducting accelerometers. To reduce the errors due to the nonlinearities of the differential accelerometer, the actual displacements of the test masses will be reduced either by actively stiffening the resonant modes or by applying an active isolation to the LTMPF.

Short-Range Inverse-Square Law Experiment in Space (ISLES)

Precision Measurements in a Noisy Environment

Ho Jung Paik and M. Vol Moody
University of Maryland
and
Donald M. Strayer
Jet Propulsion Laboratory, Caltech

Objectives of ISLES

- To test Newton's $1/r^2$ law of gravitation to $|\alpha| = 10^{-5}$ at $\lambda = 10^{-4} \sim 10^{-3}$m on ISS, where $V(r) = -(Gm_1m_2/r)\,[1+\alpha \exp(-r/\lambda)]$.

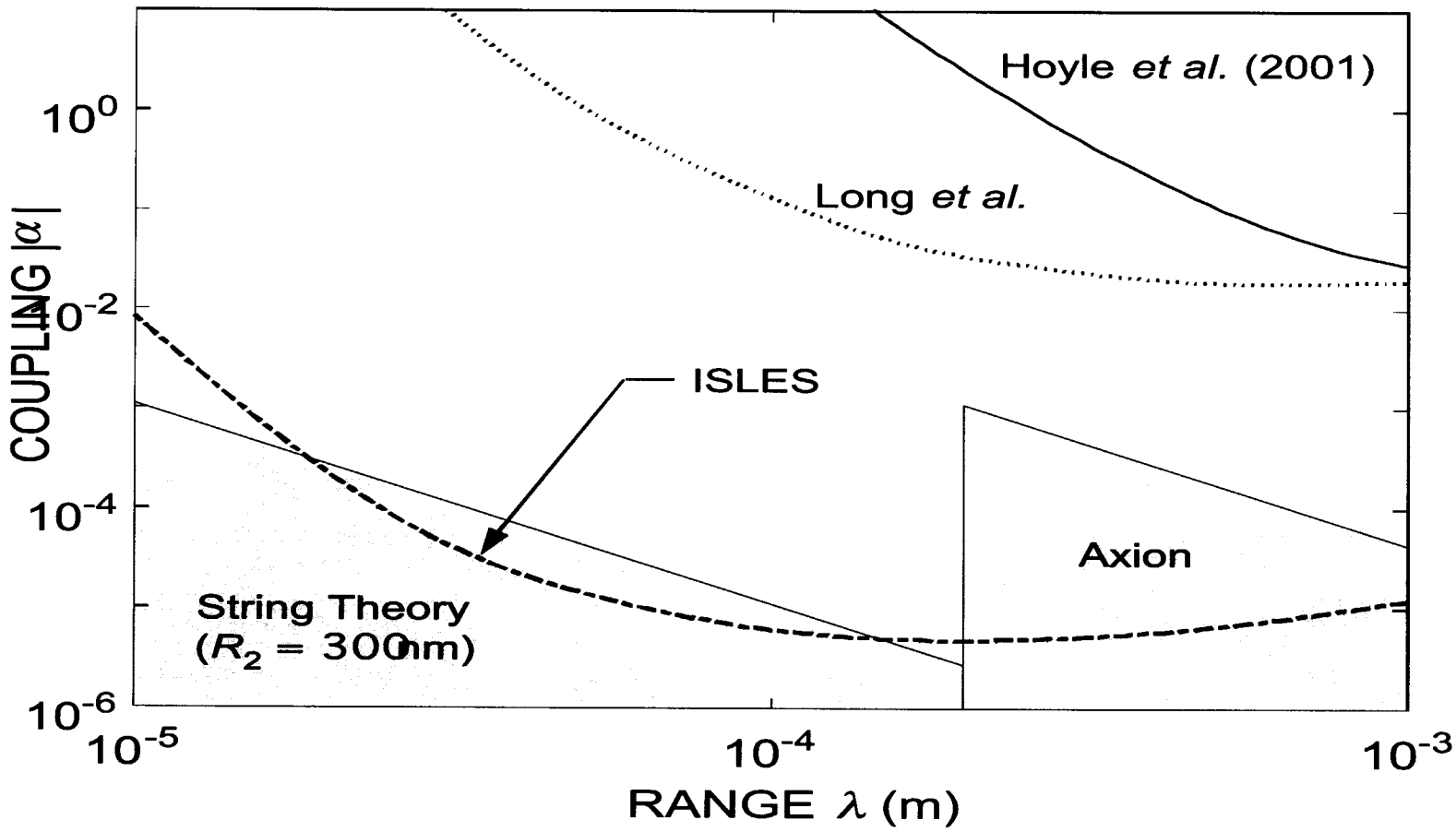

Scientific Value of ISLES

- Existence of short-range mass-mass interaction implies a violation of the $1/r^2$ law (ISL), a cornerstone of General Relativity. ISLES will extend the test of ISL to the shortest range ever, $r \sim 10\ \mu m$.

- Higher-dimensional string theories predict a possible violation of the ISL at $r < 1\ \mu m$. ISLES is capable of testing this first testable prediction of string theory with the "radius of compactification" $R_2 \geq 300$ nm.

- The axion, which has been proposed to solve the "strong CP puzzle" of particle physics and is a strong candidate for Cold Dark Matter, mediates a short-range mass-mass interaction. ISLES can detect the axion with the highest allowed strength.

Principle of Experiment

- Newtonian *null* source:

  A disk of large diameter-to-thickness ratio produces nearly null Newtonian field.

- Levitated test masses:

  Two thin superconducting disks are suspended symmetrically at 100 μm from the source and are coupled through a superconducting circuit to form a *differential* accelerometer.

- Second harmonic detection:

  As the source is driven at *f*, the Yukawa signal appears at 2*f*. This greatly reduces direct vibration coupling and magnetic crosstalk.

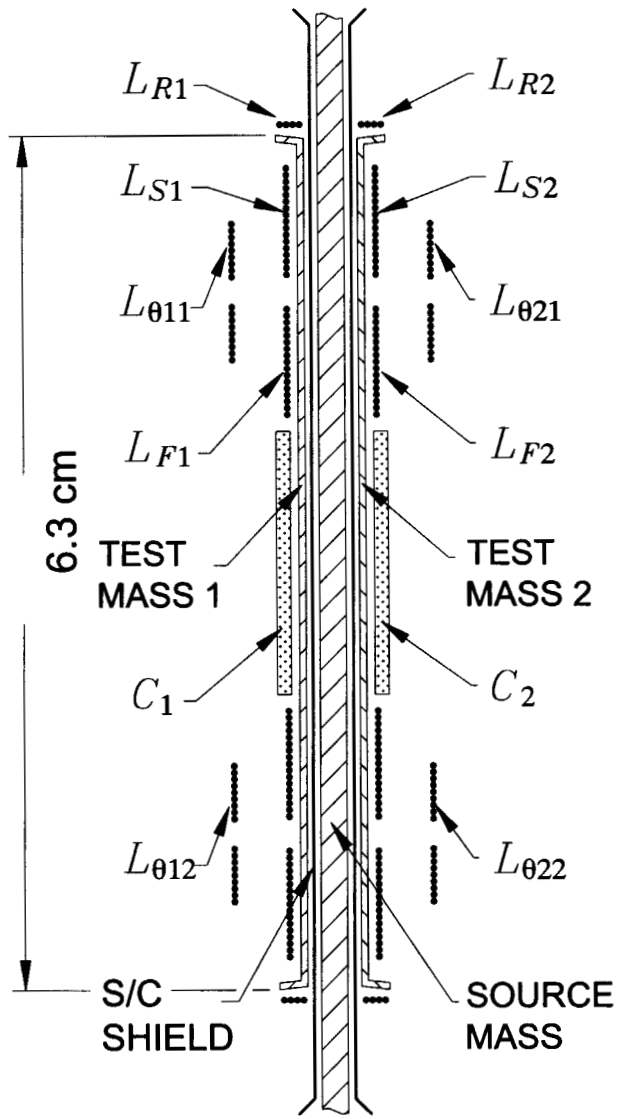

Expected Signal

- The source mass is displaced sinusoidally to a 50 μm amplitude.
- A Yukawa gradient of $1.2 \times 10^{-11}\ \alpha$ m/s^2 results at the second harmonic.
- The finite diameter of the source results in a Newtonian gradient of 2.5×10^{-16} m/s^2 (before correction).

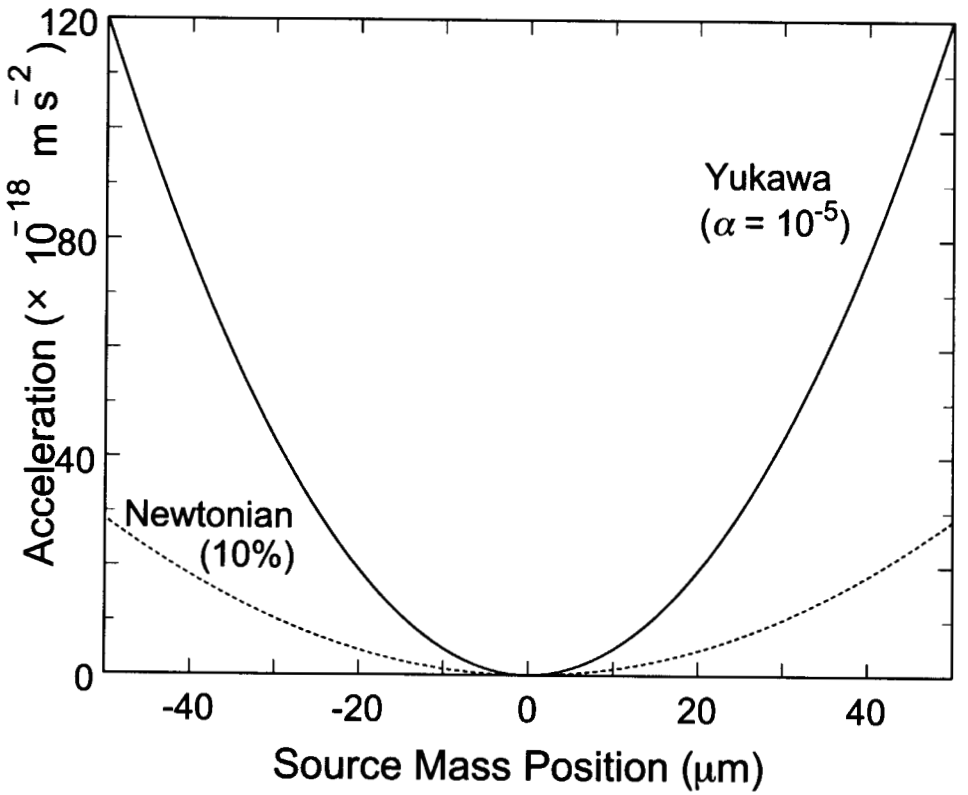

- The detector sensitivity of 7×10^{-14} m/s^{2}Hz$^{1/2}$ gives a potential resolution for α of 2×10^{-6} in 90 days of operation on ISS.

Experimental Hardware

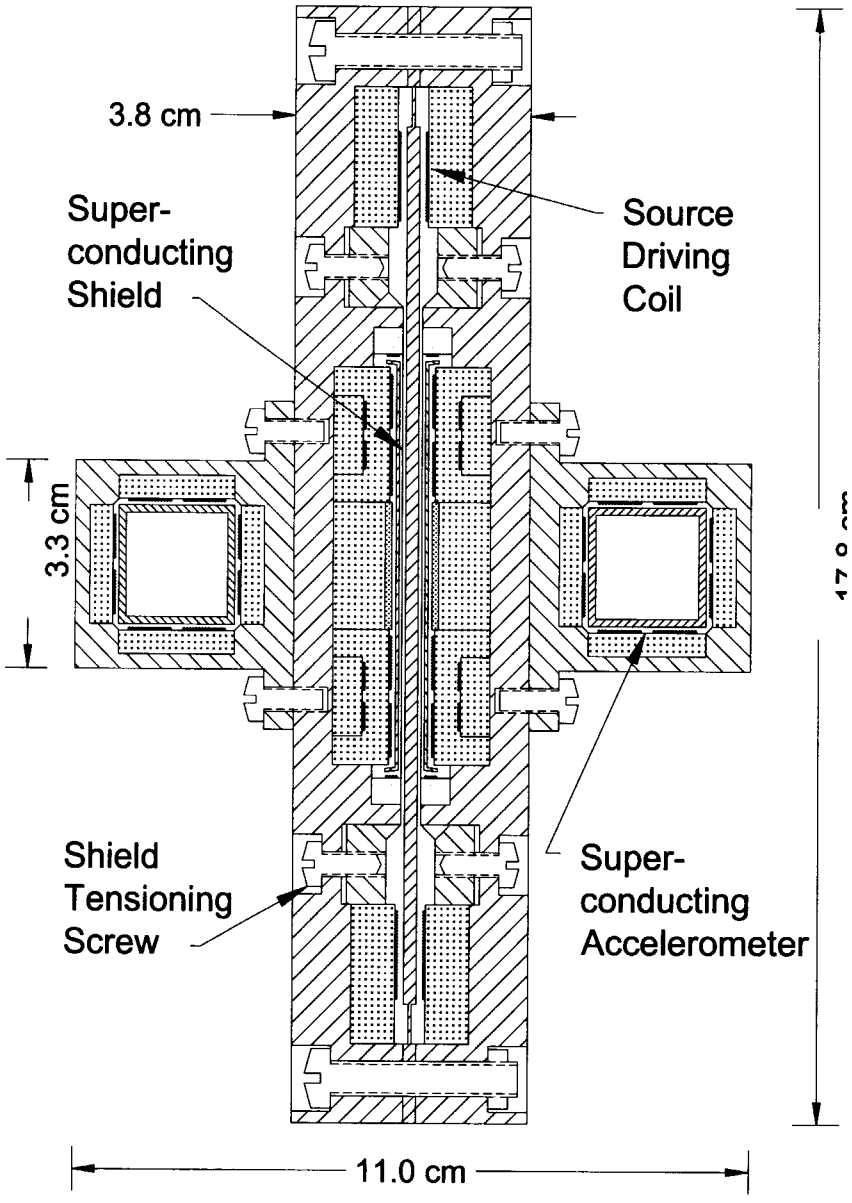

- A source mass, made of Ta (ρ = 16.6 g/cm^3), is suspended mechanically and driven magnetically.
- Each test mass, a 250-μm thick Nb disk with a slanted rim, is suspended by a ring coil and a set of pancake coils. Its sensitive axis is aligned using additional pancake coils.
- A thin, stretched Nb foil shields the test mass from the source field.
- Two auxiliary 3-axis superconducting accelerometers measure platform accelerations, which are used for dynamic error compensation.

ISP and LTMPF

LTMPF Dewar

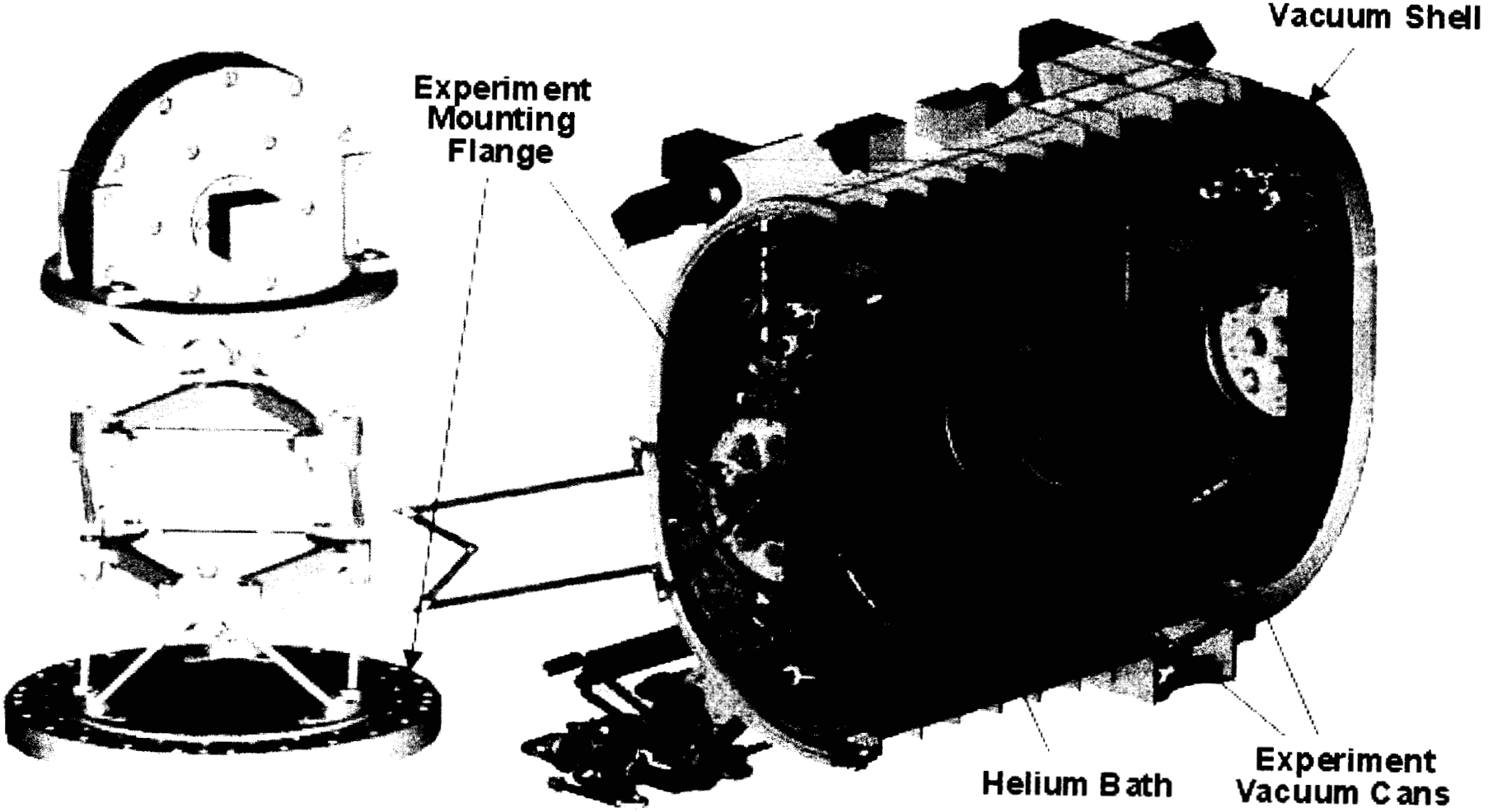

Accommodation on ISS

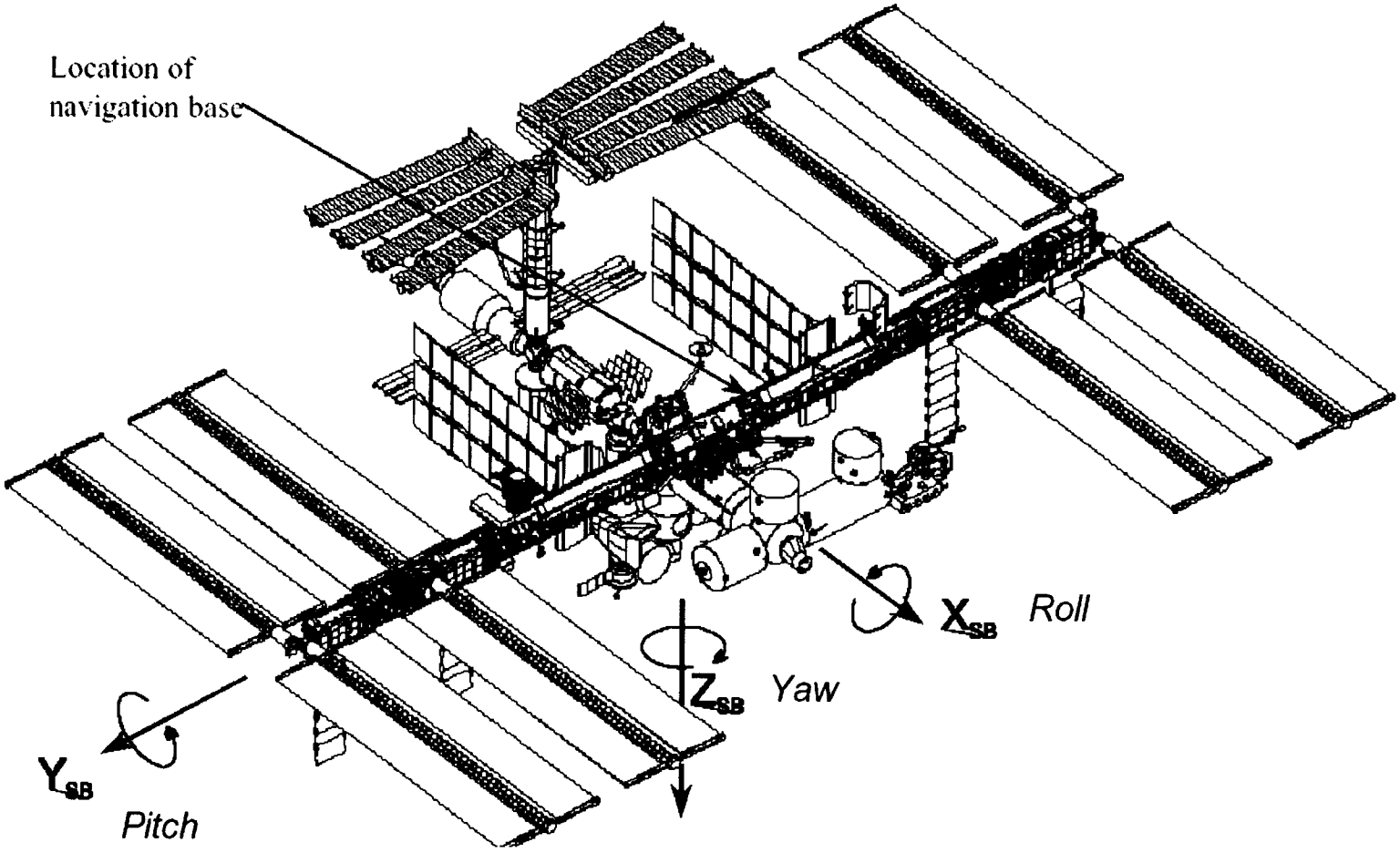

- The ISLES axis is aligned with the ISS pitch (*y*) axis to minimize the centrifugal acceleration error.

Superconducting Circuits

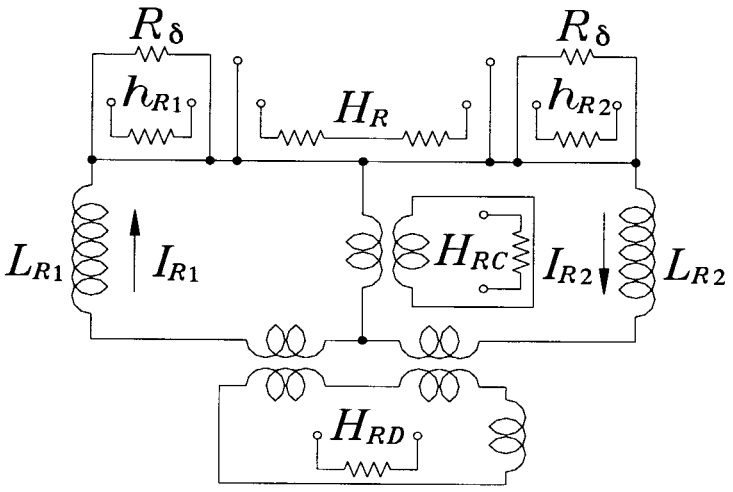

(a) Radial suspension circuit

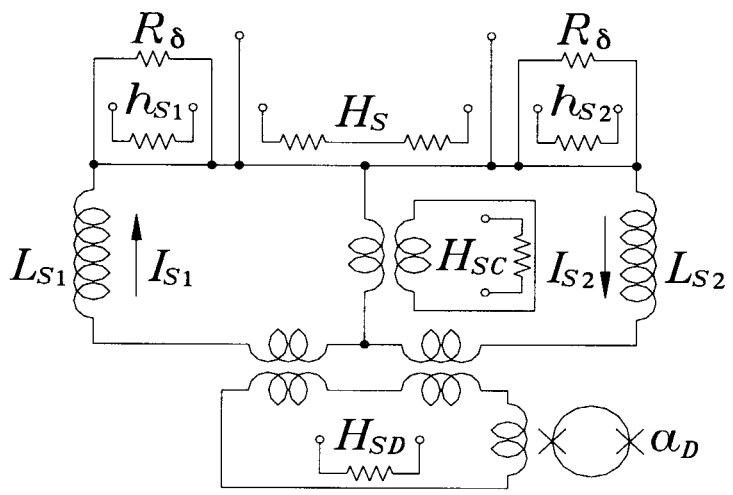

(b) Sensing circuit

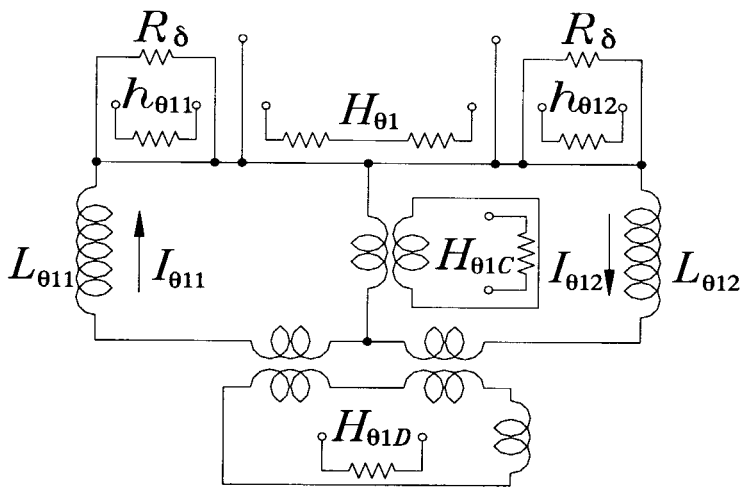

(c) Alignment circuit

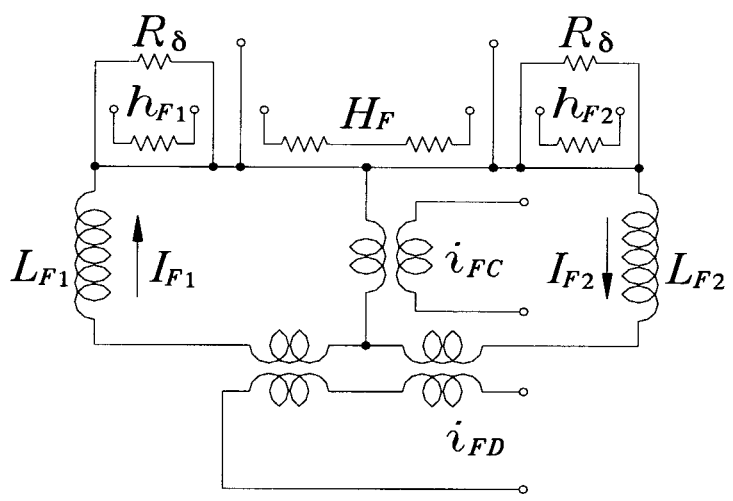

(d) Feedback circuit

Auxiliary Accelerometers

- Two levitated (hollow cube) Nb test masses are coupled through superconducting circuits.
- Three linear acceleration components (a_x, a_y, a_z), two angular acceleration components (α_x, α_z), and a gravity gradient component (Γ_{yy}) are measured.
- Sensitivities: 1×10^{-11} m/s^{2}Hz$^{1/2}$ in linear, 3×10^{-11} rad/s^{2}Hz$^{1/2}$ in angular acceleration, and 0.03 E/Hz$^{1/2}$ in gravity gradient.

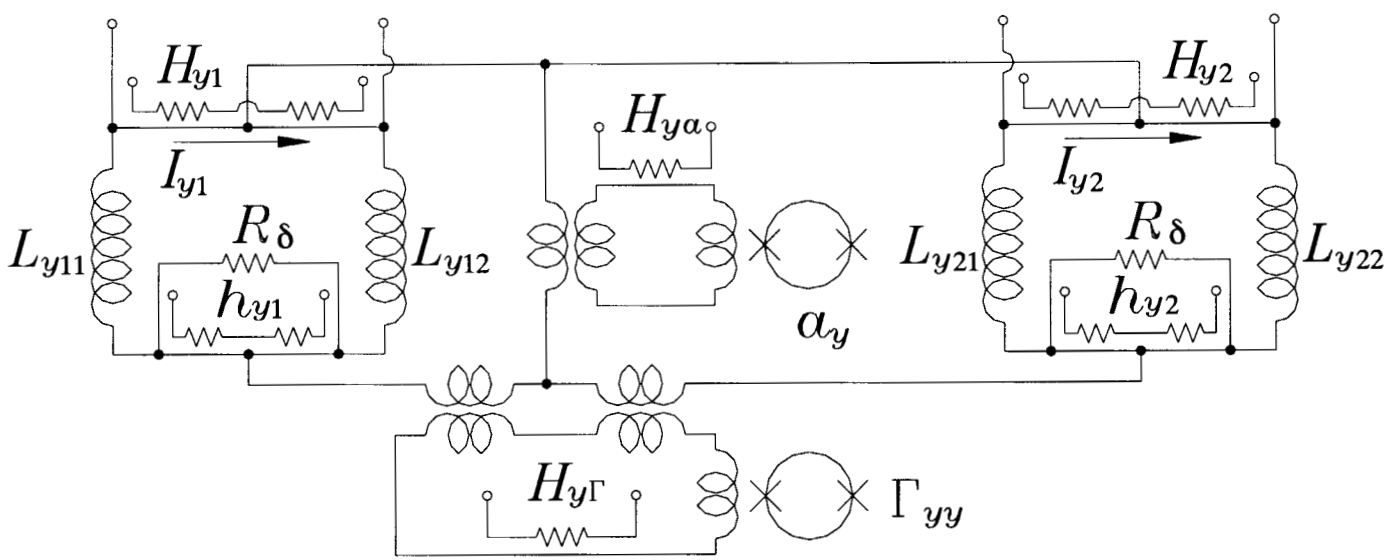

Dynamic Noise Rejection

- Common-mode balance:

  By adjusting persistent currents in the sensing and alignment circuits, linear and angular accelerations are rejected to 10^{-5} and 10^{-4} m, respectively.

- Dynamic error compensation:

  Linear and angular accelerations are measured with auxiliary accelerometers and used to compensate the residual acceleration sensitivities to 10^{-8} and 10^{-7} m, respectively. The gravity gradient, also measured by auxiliary accelerometers, is used to remove gravity noise and centrifugal acceleration error.

- Nonlinearity noise:

  This is the most important error source. To reduce the nonlinearity of scale factors by 10^3, either a *feedback* is applied to the common mode or an *active vibration isolation* is provided to LTMPF.

Vibration Isolation (Option)

- Hybrid isolation for LTMPF has been studied by Ball Aerospace.
- Eight D-strut isolators are used to attach the LTMPF to the PIU. These provide –40 dB/decade attenuation from 1 Hz to 200 Hz.
- Each isolator is oriented with a 60° angle to the long axis of LTMPF, with four isolators placed in the *xy*-plane, and four in the *xz*-plane.
- Each isolator is also equipped with a voice-coil actuator to provide active isolation.

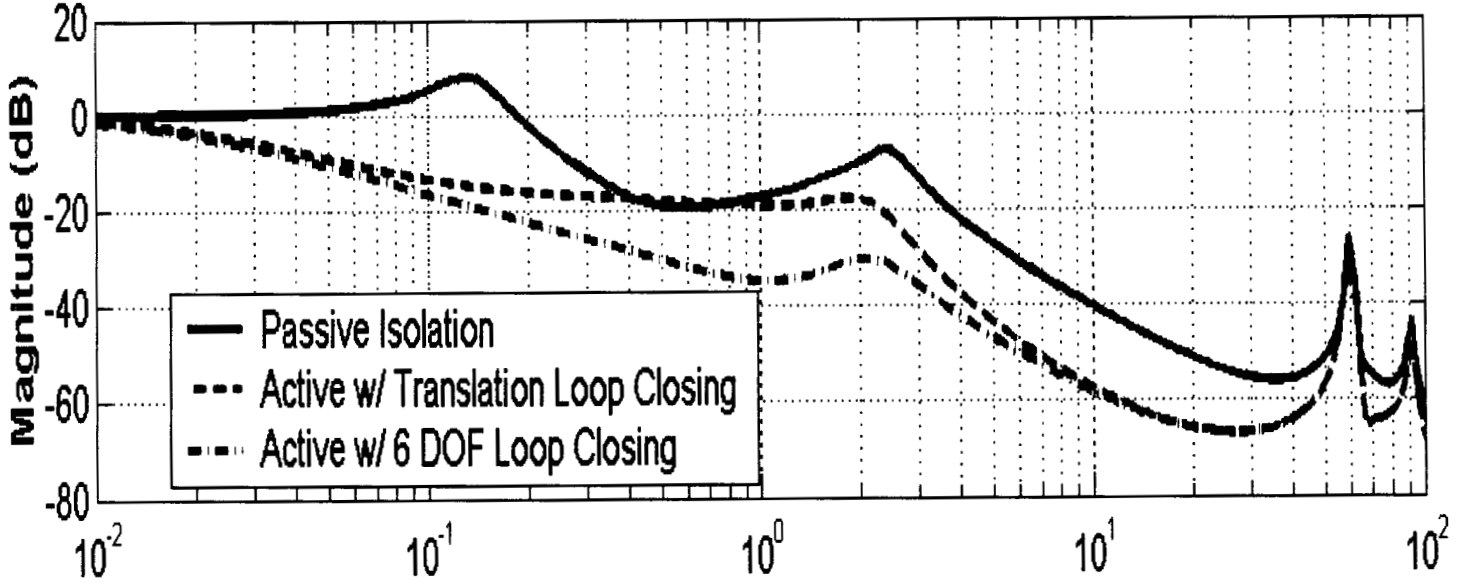

ISS Acceleration Noise

- Linear acceleration along *y*-axis: actual (red) and with active isolation (green). Signal frequency: 0.02 ~ 0.05 Hz.

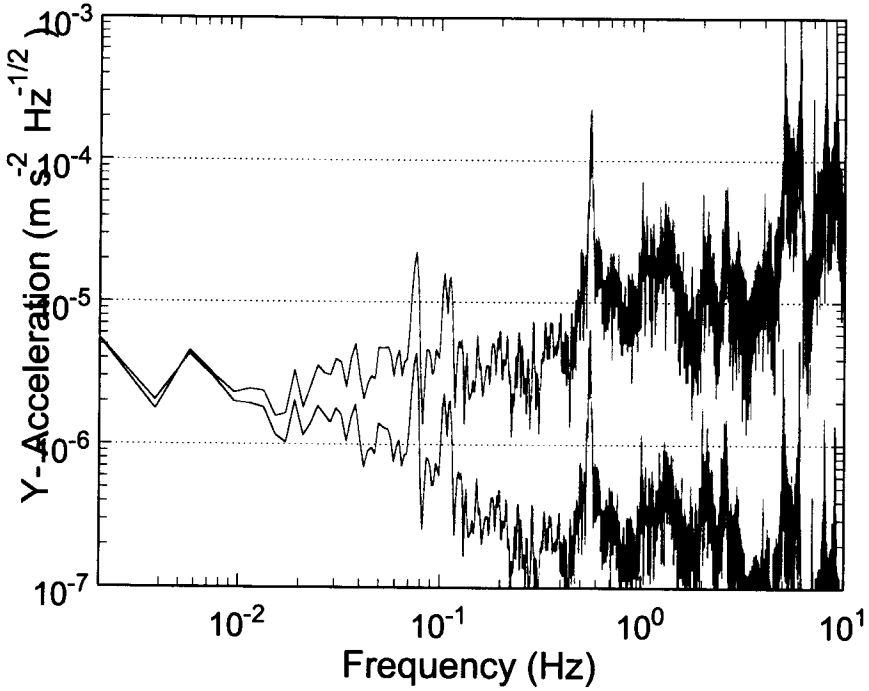

- Nonlinearity error for *y*-axis: actual (red), with active isolation (green), and with feedback (blue).

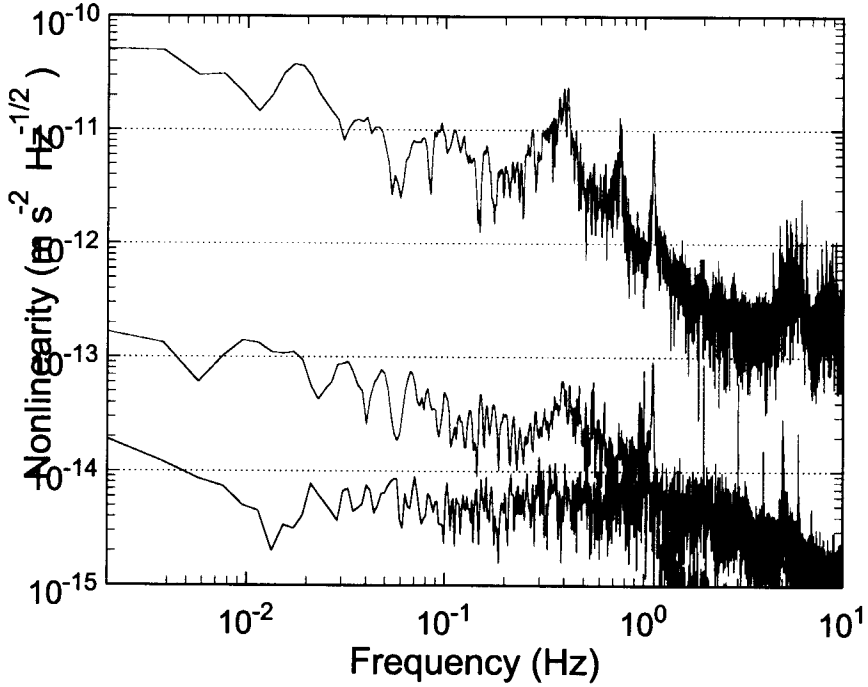

Error Budget

- Metrology errors.

Source	Error ($\times 10^{-18}$ m/s^2)
Baseline error (25 μm)	1.0
Source mass	
Finite diameter (10% correction)	12
Suspension spring (20% correction)	2.4
Radial taper (2.5 μm)	7.8
Radial density (10^{-4})	0.2
Test masses	
Rim dimension (2.5 μm correction)	1.7
Total error	15

- Total error budget.

Error Source	Error ($\times 10^{-18}$ m/s^2)	
	Feedback	Isolation
Metrology	15	15
Random	(90 days)	(90 days)
Intrinsic	25	39
ISS vibration	23	21
Gravity noise	< 1	< 1
Vibration coupling	< 1	< 1
Magnetic coupling	< 10	< 10
Electric charge	< 10	< 10
Other (30% margin)	33	41
Total	52	64

Technology Readiness

- ISLES will use the superconducting gravity gradiometer (SGG) technology, already fully developed under Code Y of NASA.
- Dynamic error compensation yielding a total CMRR $\geq 10^7$ has been demonstrated in the SGG.
- Using the SGG, the ISL has been tested to $|\alpha| = 10^{-4}$ at $\lambda = 1$ m. The ISLES instrument is very similar to the SGG, and the experiment procedure is also similar to the laboratory ISL test.
- Critical new technologies are:

  1) Feedback operation of superconducting differential accelerometer or active vibration isolation of LTMPF.

  2) Improvement of heat-switch time resolution from 10 ms to 1 ms.
- A trade study will be performed early in the flight definition phase of ISLES to decide between feedback and active isolation.

Relevance to Other NASA Programs

- ISLES is complementary with STEP in testing General Relativity. STEP tests the Equivalence Principle (composition dependence), whereas ISLES tests the Inverse Square Law (composition-independent violation).
- ISLES will pave way to future gravity gradiometer missions, such as a search for the Earth's gravitomagnetic field (GP-B follow-on), precision test of the ISL for the Earth, and high-resolution geodesy missions.
- If the active vibration isolation option is exercised, the ISS will be converted into a cost-effective, quiet microgravity platform for many future precision experiments, which would otherwise require free-flyers.
- Even without vibration isolation, ISLES accelerometers will measure ISS acceleration with precision five orders of magnitude beyond SAMS and MAMS, which will be useful for other experiments.