Mission Concept for a Nuclear Reactor-Powered Mars Cryobot Lander

John O. Elliott[1], Ronald J. Lipinski[2], David I. Poston[3]

[1] *Mission and Systems Architecture Section, Jet Propulsion Laboratory, Pasadena, CA 91109*
[2] *Advanced Nuclear Concepts, Sandia National Laboratories, Albuquerque, NM 87185*
[3] *Nuclear Systems Design, Los Alamos National Laboratory, Los Alamos, NM 87545*
(818) 393-5992; jelliott@jpl.nasa.gov

Abstract. Recently, a team from JPL and the DoE carried out a study to investigate the utility of a 3 kWe surface fission power system for Mars landed missions. In the course of the study it became clear that the application of such a power system was enabling to a wide variety of potential missions. Of these, two concepts were developed, one for a stationary lander and one for a reactor-powered rover. This paper discusses the design of the lander mission, which was developed around the concept of landing a cryobot on the Mars north polar ice cap. The cryobot is designed to bore through the entire 2-3 km thickness of the ice cap, providing a picture of the Martian climate spanning more than a million years of Martian history. The high sustained power available from the reactor system proves to be an ideal match for this mission design, enabling a level of science return unavailable from any alternative power sources. The lander design is based on a minimum extrapolation of technology, drawing heavily on the existing concepts in development at JPL for the 2009 Mars Science Laboratory (MSL) lander and EDL systems. This paper describes the unique design challenges encountered in the development of this mission architecture and incorporation of the fission power system in the lander, and presents a detailed description of the final design of this trailblazing science mission.

INTRODUCTION

The planning of Mars surface missions has progressed in recent years in the direction of increasing complexity and science return within the capabilities of existing or planned technologies. This has meant, until recently, a focus primarily on solar energy, which places inherent limitations on both mission power and longevity. The longevity issue can be addressed in a very efficient manner by the use of Radioisotope Power Systems (RPS), as are currently being considered for the Mars Science Laboratory (MSL) mission in 2009. RPSs have demonstrated their capability in the Martian environment with the Viking 1 and 2 missions, which lasted six and four years, respectively, on the surface of Mars. The Viking generators provided about 70 We to each lander, and new designs currently under development will provide RPSs with a power level of about 120 We per unit.

Beyond power levels of about 1 kWe, however, the application of RPSs begins to be prohibitively massive and expensive, especially for a landed system. At levels beyond about 3 kWe, the use of a fission power system for surface applications becomes an attractive alternative. A design concept for just such a surface fission power system has been developed recently by the DoE (Lipinski, 2002) in the form of the HOMER 15 kWt heat-pipe reactor coupled with a 3 kWe Stirling converter. This surface fission power system combines low mass and a simple design supportive of near-term technical feasibility in a package that lends itself well to application in current-technology Mars lander design. A team from JPL, working together with the DoE was tasked with exploring mission options that could make use of this power system to enable innovative Mars science in missions that could be launched within the next decade. Early in the study the team decided that two concepts should be developed, one for a stationary landed mission and one to explore incorporation of the power system in a long-range rover. The team evaluated a number of concepts for high-powered science missions, but a clear favorite soon emerged in the form of a mission to send a lander to the Mars north polar ice cap equipped with a cryobot for investigation of the historical

climate record contained in the polar ice. This mission concept promised to return unprecedented science leading to a better understanding of Mars' past. The cryobot's high power needs (1-3 kWe) were also an excellent match for the power system, and the landing location on the north polar ice cap presented design benefits as a result of the neutron reflection and shielding properties of the water ice landing surface.

SCIENCE

Beneath the North Polar cap of Mars is a detailed record of climate that, by some estimates, spans more than a million years of Martian history. The stratigraphic history is written by complex cycles of deposition and removal of ice, dust, and atmospheric volatiles. The exploration of this history may reveal evidence of planetary obliquity variations and climate changes or reservoirs of organics material, protected by the ice from soil oxidants.

Accumulation and removal of water ice from the polar cap is part of a global exchange between both poles and lower-latitude ground iced deposits. Both the amplitude and the sign of accumulation/ablation are believed to vary with the Martian orbital elements, particularly the obliquity cycle. Periods of high obliquity tend to level global temperatures, favoring transfer from the poles to low latitudes. Conversely, periods of low obliquity exaggerate meridional temperature gradients, favoring polar accumulation of water ices. Since dust mostly likely accumulated with water ice at the poles, the variations in annual net water deposition rates may correspond to variation in dust-loading.

A vertical profile of the layered deposits in the ice may reveal the range and nature of Martian climate variations, signatures of volcanic or impact events, and any phenomena encoded in the physical and chemical properties of the water, entrained dust, or trapped gas.

Instrumentation

The cryobot is a robotic vehicle that achieves mobility in an ice environment by thermally changing the phase of the icy solid to a liquid or gas through which the vehicle can pass. The nose of the device heats the icy medium and effects the phase change. Cryobots are similar to remotely operated vehicles in the ocean; they carry electronics to power and control the system, and also carry an on-board instrument payload. In the icy cavity, the cryobot's instrumentation suite can perform imaging, sampling, and a variety of scientific investigations. For the Mars polar cryobot application the cryobot will be tethered to the lander vehicle. The tether enables power and signals to move to and from the lander and the submerged vehicle. The cryobot design employed in this study is based on developments carried out at JPL and proven in a variety of field-test applications.

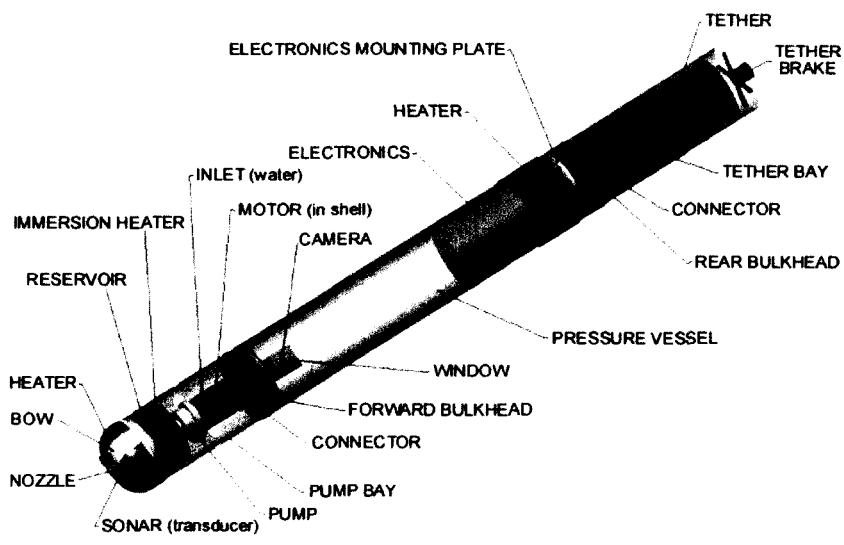

FIGURE 1. Illustration of Cryobot subsystems.

The basic structure of the cryobot vehicle is cylindrical and divided into Bays: Nose, Pump, Instrument, Electronics, and Tether (See Figure 1). The nose bay contains the passive melt system and jetting nozzle; the pump bay holds the water jetting subsystem. The instrument and electronics bays use a pressure housing very common to oceanographic probes. The tether is used to supply power and serve as a data and command communication cable. For the Nuclear Cryobot Lander it was decided to keep the tether system on the lander deck, rather than stowing it in the cryobot as shown in Figure 1. The deck-mount arrangement provides flexibility for carrying additional tether length, and facilitates retrieval of the cryobot following the completion of each borehole. The cryobot vehicle will be controlled to maintain vertical orientation during passive melting, but is also capable of directional change via differential heating of the four quadrants of the nose bay heater plates. This directional control will be used in the mission to allow the cryobot to perform melts at vertical angles around the landing site (after successful completion of the initial vertical bore) to obtain information on regional variations in the ice.

The cryobot instrument suite includes a visible/ultraviolet macro-imager for obtaining high-resolution images of the borehole walls. Visible imaging will allow characterization of the dust layers deposited on the ice over geological time scales, while the UV images facilitate a search for evidence of fluorescent organic markers trapped in the ice. The instrument bay also accommodates a high-resolution electrospray ionization/ion mobility spectrometer (ESI/IMS). This instrument is used as a tool to analyze the effluent during cryobot operations and determine the composition and abundance of possible biomolecular species to aid in the search for traces of life (past or present) on Mars.

MISSION DESIGN

The selected landing site is on the north polar ice cap at 84° N and 330° W. At this location, the ice cap is believed to be approximately 2-3 km thick.

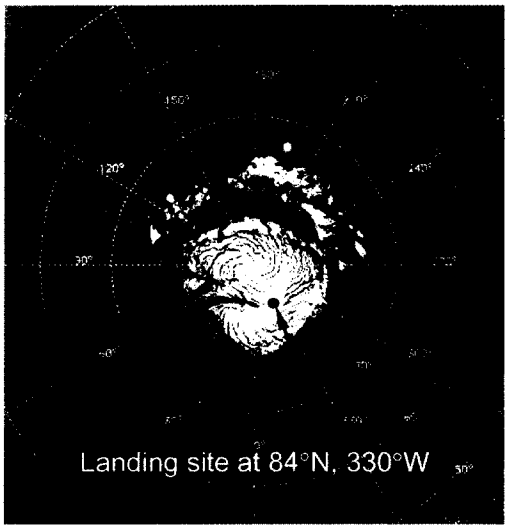

FIGURE 2. Landing Site.

The study team targeted the mission for a November, 2011 launch resulting in an August 2012 arrival. The 2011 launch date was chosen as the first opportunity following launch of the MSL mission in 2009, which will serve to test several of the systems used in the design of the cryobot lander. The spacecraft will launch aboard a Delta IV heavy launch vehicle (Delta 4050H).

The natural transfer geometry to Mars in 2011 favors landings at low or southern latitudes. The northern polar cap only becomes accessible by using transfers which are close to 180° heliocentric and require high launch and arrival energies. A 20-day launch period has been found which minimizes launch energy given a constraint of a 20° declination of the arrival asymptote at Mars. This launch period is described in the following table:

TABLE 1. Mission Transfer Parameters.

Parameter	Opening Day	Closing Day
Launch date	2011-11-27	2011-12-17
Arrival date	2012-08-16	2012-09-15
Launch energy, C_3 (km^2/s^2)	24.8	30.6
Delta 4050H capability (kg)	5830	5160

This mission will use a direct Type I transfer with relatively high energy from Earth to Mars, leading into a direct entry into Mars' atmosphere. An MSL-derived aeroshell and heatshield will protect the lander during entry until the spacecraft has decelerated enough for a Viking-style parachute to open and slow the velocity further. Within a few kilometers of the surface, the on-board radar altimeter will begin operating and at the appropriate altitude will signal parachute release and initiate powered descent to a soft landing on the polar icecap. Surface operations including communications, deployment and power system startup will be battery-powered until the nuclear reactor achieves full-power operation. Science operations will commence within a week or two of landing and continue for a nominal mission of 5 yr (2.6 Mars years).

LANDER DESIGN

The Cryobot Lander configuration is based on adaptation of a baseline design for the 2009 MSL mission pallet lander (Figure 3). The fission power system is mounted to the base of the pallet lander deck. The lander batteries and the cryobot mechanical systems also are mounted on the deck, with the cryobot itself being lowered from the side of the lander into the ice. The deck area will experience very high radiation doses during the course of the mission, allowing only the most radiation-tolerant equipment to be located there. Electronics for the reactor, lander subsystems, and science instruments are all located on a shielded platform extending four meters above the top of the power system.

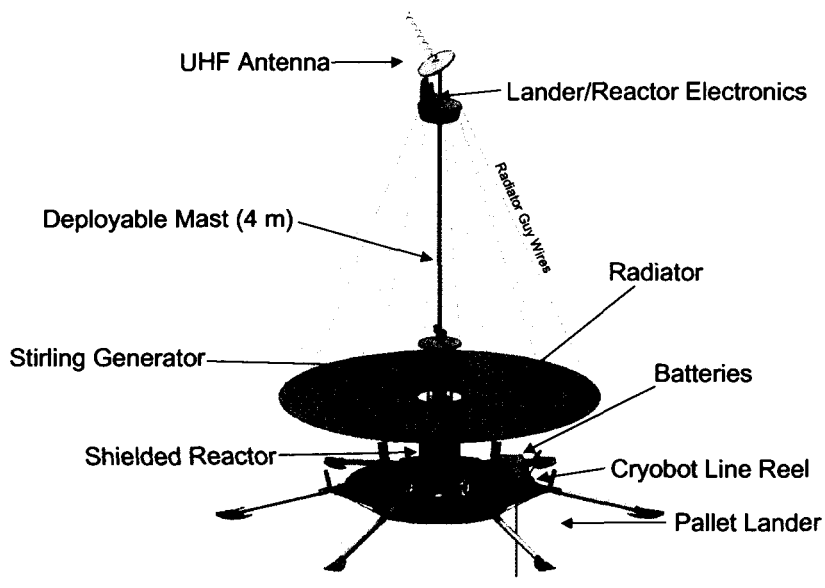

FIGURE 3. Lander Configuration

The power system radiator takes the form of a 20 m^2 disk extending around the plane of the Stirling cold collar. The radiator rejects heat from its upper surface only; the lower surface is insulated to minimize heat input to the ice. Guy wires shown in the figure serve to stabilize the mast and radiator, and are also used to deploy the stowed radiator following landing.

Mass Summary

The Delta IV launch vehicle provides a worst-case launch mass capability of 5160 kg for the high C_3 needed for this mission. The lander payload mass, including the fission power system, electronics, and science payloads totals to 1404.7 kg, as summarized in Table 2 below. Using an MSL-derived pallet lander (which itself is estimated to weigh 1000 kg) brings the total landed mass to approximately 2405 kg. The MSL-derived entry system for this mission is estimated to weigh about 1142 kg resulting in a total entry mass of about 3547 kg. A mass of about 400 kg is estimated for a basic cruise stage, patterned on those under consideration for MSL, bringing the total launch mass to 3947 kg. The MSL design that we have adopted uses the lander propulsion system for cruise attitude and trajectory correction maneuvers. Propellant mass is included in the mass estimate for the entry system.

TABLE 2. Lander Payload Mass Summary.

Element	Mass (kg)	Element	Mass (kg)
Reactor Power System	458	Power electronics	34.8
Structure	35	Radiator	72
Telecom	32.7	Shielding (incl. Electronics platform)	578
Thermal	2	Mast-mounted science payload	2
Avionics box	17.3	Cryobot & Tether	80
Primary battery (for EDL and deployment)	37	Astrobiology science package	2.5
Secondary battery	53.4	**Total Payload Mass**	**1404.7**

The wet launch mass of 3947 kg leaves a mass margin of 1213 kg over the Delta 4050H worst-case capability. This gives a spacecraft mass margin of better than 30% for this mission.

The Cryobot Lander was designed to fit within the envelope of an MSL-derived 4.57 m-diameter with an extended backshell to accommodate the height of the power system (Figure 4). This is the largest aeroshell that can be launched by currently available launch vehicles and it gives fairly good performance in terms of landed mass capability. Using the current Mach 2.2 qualification envelope of the Viking-style supersonic parachute this aeroshell is estimated to allow a landed mass of about 2048 kg to be delivered to the surface. The cryobot lander estimated landed mass exceeds this by some 350 kg, which will probably require an expansion of the qualification envelope of the supersonic 'chute. It is estimated that the same Viking-style parachute, if qualified to a Mach 3 envelope could increase landed mass capability for the same aeroshell to as much as 3600 kg. The availability of this Mach 3 parachute has been assumed for this mission study. It should be noted that the use of a Mach 3 'chute requires no new technology development, but is rather a question of increase in the qualification envelope of an existing, proven design.

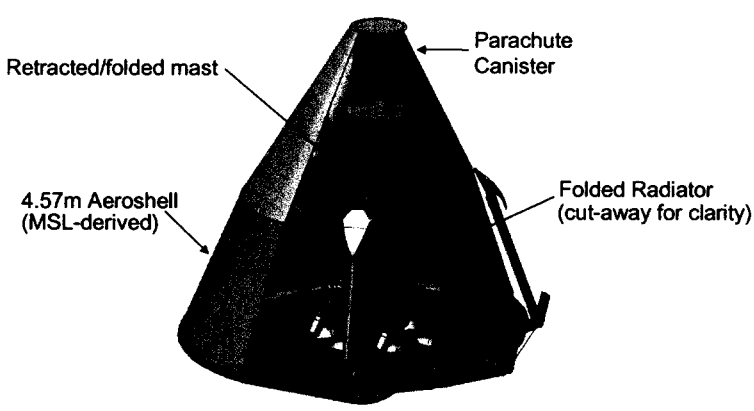

FIGURE 4. Lander in Aeroshell

Subsystems Design

The design of subsystems for the cryobot lander maximizes the adoption of proven elements from heritage missions, or those presently in development. No new technology development is required to implement any of the lander subsystems incorporated in the design.

Telecommunications

The lander can receive commands and return telemetry either directly to Earth (DTE) at X-band (low rate using a patch antenna) or at high rate through a Mars communications satellite (nominally the Agenzia Spaziale Italiana (ASI) Marconi telecom orbiter) at UHF via a steerable high gain antenna. At this latitude there will be long periods of time during which the lander will have no view of the Earth, which led to the choice of relay communications rather than high power DTE. Figure 5 depicts the available links.

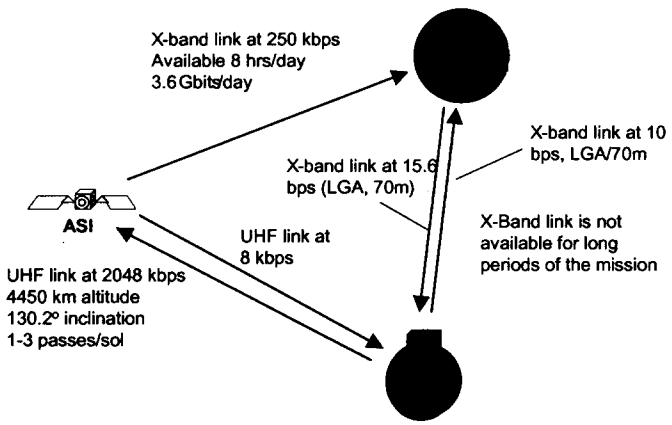

FIGURE 5. Telecommunications Links

All telemetry return will nominally be done at UHF through the ASI Marconi satellite. This includes the science and engineering data. Data will be relayed whenever the ASI orbiter comes into view. The pass shall have a minimum elevation angle of 30°. At this elevation angle, a data rate of 2048 kbps can be supported. The nominal data volume per sol is 4.3 Gb of science data and 5 Mb of engineering data.

Avionics

The lander electronics design is adapted from that developed for the Mars Exploration Rover (MER) and Mars Reconnaissance Orbiter (MRO) spacecraft. Lander electronics will be incorporated in a warm electronics box mounted on the shielded electronics platform raised 4 m above the nuclear power system. The electronics used in this design are rated to withstand a total ionizing dose of 300 krad with a radiation design margin (RDM) of 2. The electronics platform and reactor shielding design provides a maximum dose of less than 200 krad over the five-year mission.

Power

In addition to the fission power system the lander incorporates batteries for portions of the mission when the reactor is not available. A primary battery is included to provide energy for the entry, descent and landing (EDL) phase of the mission, and to power the lander during a three-day initial deployment through initial reactor startup. This energy will be supplied by an 8400 Whr Lithium Thionyl Chloride primary battery based on an existing design developed by JPL for the Air Force. A secondary battery will provide the energy to the lander in the event of a reactor anomaly during the landed mission. This battery is sized to provide energy for a two-day recovery period to

support telecom and other engineering systems (but no science), as well as one additional reactor startup cycle. The total energy storage requirement was estimated at 2085 Whr. This requirement will be met by three 25-Ahr Li-ion batteries based on the design originally developed for the Mars '01 Lander Mission.

Surface Fission Power System

The surface fission power system (Figure 5) uses a heatpipe-cooled, UN-fueled, stainless steel-clad, pin-type reactor with a Stirling power conversion system (Lipinski, 2002). Heat is rejected to the cold Martian surroundings via a set of capillary pumped loops embedded in a deployable disk-shaped thermal radiator. The system produces 3 kWe and its mass is presently estimated to be 1143 kg. A Stirling conversion system was chosen because its high efficiency reduces the amount of fuel burnup, radiation levels, and heat that the radiator must reject. A heatpipe-cooled reactor was chosen because it provides parallel heat-removal paths for the reactor without an external pump and has the potential for reduction in development and testing costs due to its modularity (Poston, 2001). Heatpipes also have been proven to be able to handle multiple freeze-thaw cycles.

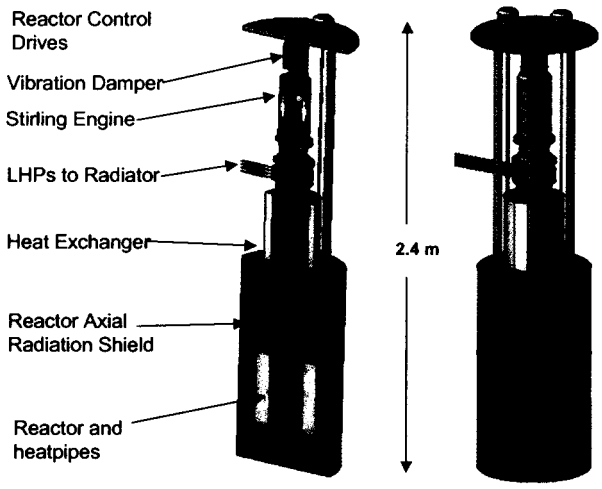

FIGURE 5. Surface Fission Power System

Shield Design

By far the dominant factor influencing the design of this mission is the shielding necessary to provide a safe haven for the lander and instrument electronics. A baseline requirement was that total mission dose to electronics should be kept below 200 krad to allow the use of currently available technology. The need to minimize shielding mass has led to a unique solution to this problem. It became clear that shielding the full area of the lander deck to acceptable levels would be a prohibitively massive proposition, and scattering from the Martian surface precluded the adoption of a simple shadow shield, such as might be effectively applied in a space environment. The solution takes the form of a combination shield consisting of two major parts: a preferential 4π shield around the reactor and a shadow shield under an elevated electronics platform as can be seen in Figure 3. The platform is placed atop a 4-m boom that extends from the top of the power conversion system. A 4-m length was chosen as a balance between shielding and structural/deployment concerns; this height allows approximately 100 kg of shielding to be placed at the base of the platform. The 4π shield contains most of the mass and does most of the shielding, largely by preventing neutrons from scattering off of the surface and spacecraft components. A certain minimum amount of 4π shielding, ~200 kg, is required to keep doses acceptable to power system components (control drives, Stirling engine parts, etc.). In the lander design the 4π shield is considerably augmented, weighing 465 kg. This allows the platform shield mass to be kept within the requirement of ~100 kg, and the extra 4π shielding keeps doses lower to the cryobot, feed cables, and other lander components. The platform shield consists of additional neutron shielding (20 cm of additional LiH) and a 0.5 cm thick depleted uranium gamma shield. This gives the platform shield a total mass of 113 kg. The total mission dose at the electronics platform resulting from this shielding design is shown in Table 3 for gamma and neutron dose.

Mission Concept for a Nuclear Reactor-Powered Mars Cryobot Lander

John O. Elliott[1], Ronald J. Lipinski[2], David I. Poston[3]

[1] *Mission and Systems Architecture Section, Jet Propulsion Laboratory, Pasadena, CA 91109*
[2] *Advanced Nuclear Concepts, Sandia National Laboratories, Albuquerque, NM 87185*
[3] *Nuclear Systems Design, Los Alamos National Laboratory, Los Alamos, NM 87545*
(818) 393-5992; jelliott@jpl.nasa.gov

Abstract. Recently, a team from JPL and the DoE carried out a study to investigate the utility of a 3 kWe surface fission power system for Mars landed missions. In the course of the study it became clear that the application of such a power system was enabling to a wide variety of potential missions. Of these, two concepts were developed, one for a stationary lander and one for a reactor-powered rover. This paper discusses the design of the lander mission, which was developed around the concept of landing a cryobot on the Mars north polar ice cap. The cryobot is designed to bore through the entire 2-3 km thickness of the ice cap, providing a picture of the Martian climate spanning more than a million years of Martian history. The high sustained power available from the reactor system proves to be an ideal match for this mission design, enabling a level of science return unavailable from any alternative power sources. The lander design is based on a minimum extrapolation of technology, drawing heavily on the existing concepts in development at JPL for the 2009 Mars Science Laboratory (MSL) lander and EDL systems. This paper describes the unique design challenges encountered in the development of this mission architecture and incorporation of the fission power system in the lander, and presents a detailed description of the final design of this trailblazing science mission.

INTRODUCTION

The planning of Mars surface missions has progressed in recent years in the direction of increasing complexity and science return within the capabilities of existing or planned technologies. This has meant, until recently, a focus primarily on solar energy, which places inherent limitations on both mission power and longevity. The longevity issue can be addressed in a very efficient manner by the use of Radioisotope Power Systems (RPS), as are currently being considered for the Mars Science Laboratory (MSL) mission in 2009. RPSs have demonstrated their capability in the Martian environment with the Viking 1 and 2 missions, which lasted six and four years, respectively, on the surface of Mars. The Viking generators provided about 70 We to each lander, and new designs currently under development will provide RPSs with a power level of about 120 We per unit.

Beyond power levels of about 1 kWe, however, the application of RPSs begins to be prohibitively massive and expensive, especially for a landed system. At levels beyond about 3 kWe, the use of a fission power system for surface applications becomes an attractive alternative. A design concept for just such a surface fission power system has been developed recently by the DoE (Lipinski, 2002) in the form of the HOMER 15 kWt heat-pipe reactor coupled with a 3 kWe Stirling converter. This surface fission power system combines low mass and a simple design supportive of near-term technical feasibility in a package that lends itself well to application in current-technology Mars lander design. A team from JPL, working together with the DoE was tasked with exploring mission options that could make use of this power system to enable innovative Mars science in missions that could be launched within the next decade. Early in the study the team decided that two concepts should be developed, one for a stationary landed mission and one to explore incorporation of the power system in a long-range rover. The team evaluated a number of concepts for high-powered science missions, but a clear favorite soon emerged in the form of a mission to send a lander to the Mars north polar ice cap equipped with a cryobot for investigation of the historical

climate record contained in the polar ice. This mission concept promised to return unprecedented science leading to a better understanding of Mars' past. The cryobot's high power needs (1-3 kWe) were also an excellent match for the power system, and the landing location on the north polar ice cap presented design benefits as a result of the neutron reflection and shielding properties of the water ice landing surface.

SCIENCE

Beneath the North Polar cap of Mars is a detailed record of climate that, by some estimates, spans more than a million years of Martian history. The stratigraphic history is written by complex cycles of deposition and removal of ice, dust, and atmospheric volatiles. The exploration of this history may reveal evidence of planetary obliquity variations and climate changes or reservoirs of organics material, protected by the ice from soil oxidants.

Accumulation and removal of water ice from the polar cap is part of a global exchange between both poles and lower-latitude ground iced deposits. Both the amplitude and the sign of accumulation/ablation are believed to vary with the Martian orbital elements, particularly the obliquity cycle. Periods of high obliquity tend to level global temperatures, favoring transfer from the poles to low latitudes. Conversely, periods of low obliquity exaggerate meridional temperature gradients, favoring polar accumulation of water ices. Since dust mostly likely accumulated with water ice at the poles, the variations in annual net water deposition rates may correspond to variation in dust-loading.

A vertical profile of the layered deposits in the ice may reveal the range and nature of Martian climate variations, signatures of volcanic or impact events, and any phenomena encoded in the physical and chemical properties of the water, entrained dust, or trapped gas.

Instrumentation

The cryobot is a robotic vehicle that achieves mobility in an ice environment by thermally changing the phase of the icy solid to a liquid or gas through which the vehicle can pass. The nose of the device heats the icy medium and effects the phase change. Cryobots are similar to remotely operated vehicles in the ocean; they carry electronics to power and control the system, and also carry an on-board instrument payload. In the icy cavity, the cryobot's instrumentation suite can perform imaging, sampling, and a variety of scientific investigations. For the Mars polar cryobot application the cryobot will be tethered to the lander vehicle. The tether enables power and signals to move to and from the lander and the submerged vehicle. The cryobot design employed in this study is based on developments carried out at JPL and proven in a variety of field-test applications.

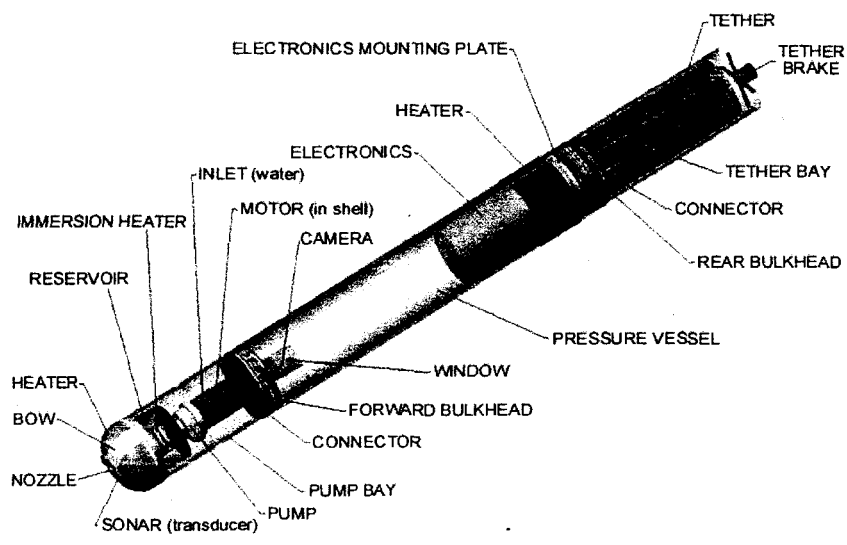

FIGURE 1. Illustration of Cryobot subsystems.

The basic structure of the cryobot vehicle is cylindrical and divided into Bays: Nose, Pump, Instrument, Electronics, and Tether (See Figure 1). The nose bay contains the passive melt system and jetting nozzle; the pump bay holds the water jetting subsystem. The instrument and electronics bays use a pressure housing very common to oceanographic probes. The tether is used to supply power and serve as a data and command communication cable. For the Nuclear Cryobot Lander it was decided to keep the tether system on the lander deck, rather than stowing it in the cryobot as shown in Figure 1. The deck-mount arrangement provides flexibility for carrying additional tether length, and facilitates retrieval of the cryobot following the completion of each borehole. The cryobot vehicle will be controlled to maintain vertical orientation during passive melting, but is also capable of directional change via differential heating of the four quadrants of the nose bay heater plates. This directional control will be used in the mission to allow the cryobot to perform melts at vertical angles around the landing site (after successful completion of the initial vertical bore) to obtain information on regional variations in the ice.

The cryobot instrument suite includes a visible/ultraviolet macro-imager for obtaining high-resolution images of the borehole walls. Visible imaging will allow characterization of the dust layers deposited on the ice over geological time scales, while the UV images facilitate a search for evidence of fluorescent organic markers trapped in the ice. The instrument bay also accommodates a high-resolution electrospray ionization/ion mobility spectrometer (ESI/IMS). This instrument is used as a tool to analyze the effluent during cryobot operations and determine the composition and abundance of possible biomolecular species to aid in the search for traces of life (past or present) on Mars.

MISSION DESIGN

The selected landing site is on the north polar ice cap at 84° N and 330° W. At this location, the ice cap is believed to be approximately 2-3 km thick.

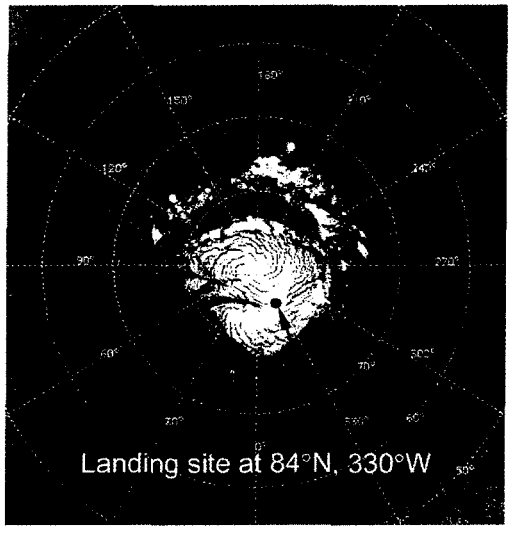

FIGURE 2. Landing Site.

The study team targeted the mission for a November, 2011 launch resulting in an August 2012 arrival. The 2011 launch date was chosen as the first opportunity following launch of the MSL mission in 2009, which will serve to test several of the systems used in the design of the cryobot lander. The spacecraft will launch aboard a Delta IV heavy launch vehicle (Delta 4050H).

The natural transfer geometry to Mars in 2011 favors landings at low or southern latitudes. The northern polar cap only becomes accessible by using transfers which are close to 180° heliocentric and require high launch and arrival energies. A 20-day launch period has been found which minimizes launch energy given a constraint of a 20° declination of the arrival asymptote at Mars. This launch period is described in the following table:

TABLE 1. Mission Transfer Parameters.

Parameter	Opening Day	Closing Day
Launch date	2011-11-27	2011-12-17
Arrival date	2012-08-16	2012-09-15
Launch energy, C_3 (km^2/s^2)	24.8	30.6
Delta 4050H capability (kg)	5830	5160

This mission will use a direct Type I transfer with relatively high energy from Earth to Mars, leading into a direct entry into Mars' atmosphere. An MSL-derived aeroshell and heatshield will protect the lander during entry until the spacecraft has decelerated enough for a Viking-style parachute to open and slow the velocity further. Within a few kilometers of the surface, the on-board radar altimeter will begin operating and at the appropriate altitude will signal parachute release and initiate powered descent to a soft landing on the polar icecap. Surface operations including communications, deployment and power system startup will be battery-powered until the nuclear reactor achieves full-power operation. Science operations will commence within a week or two of landing and continue for a nominal mission of 5 yr (2.6 Mars years).

LANDER DESIGN

The Cryobot Lander configuration is based on adaptation of a baseline design for the 2009 MSL mission pallet lander (Figure 3). The fission power system is mounted to the base of the pallet lander deck. The lander batteries and the cryobot mechanical systems also are mounted on the deck, with the cryobot itself being lowered from the side of the lander into the ice. The deck area will experience very high radiation doses during the course of the mission, allowing only the most radiation-tolerant equipment to be located there. Electronics for the reactor, lander subsystems, and science instruments are all located on a shielded platform extending four meters above the top of the power system.

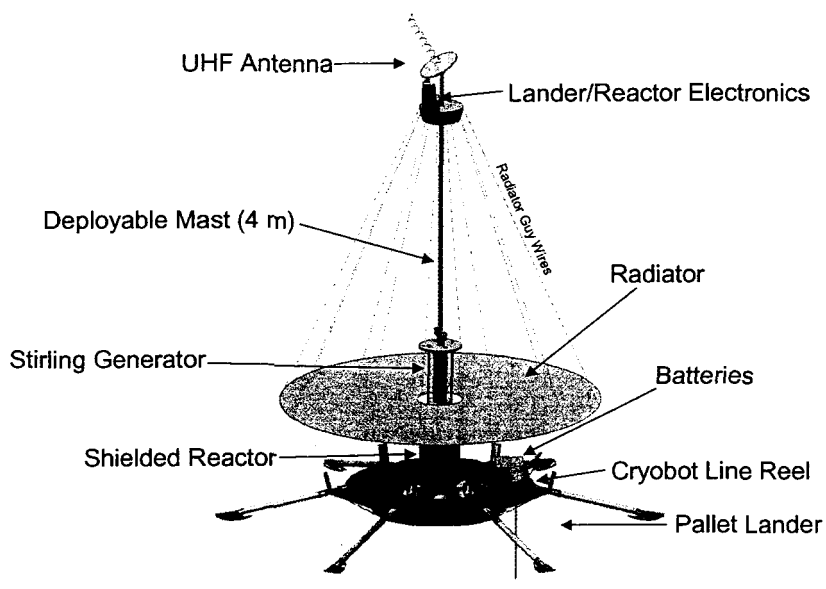

FIGURE 3. Lander Configuration

The power system radiator takes the form of a 20 m^2 disk extending around the plane of the Stirling cold collar. The radiator rejects heat from its upper surface only; the lower surface is insulated to minimize heat input to the ice. Guy wires shown in the figure serve to stabilize the mast and radiator, and are also used to deploy the stowed radiator following landing.

Mass Summary

The Delta IV launch vehicle provides a worst-case launch mass capability of 5160 kg for the high C_3 needed for this mission. The lander payload mass, including the fission power system, electronics, and science payloads totals to 1404.7 kg, as summarized in Table 2 below. Using an MSL-derived pallet lander (which itself is estimated to weigh 1000 kg) brings the total landed mass to approximately 2405 kg. The MSL-derived entry system for this mission is estimated to weigh about 1142 kg resulting in a total entry mass of about 3547 kg. A mass of about 400 kg is estimated for a basic cruise stage, patterned on those under consideration for MSL, bringing the total launch mass to 3947 kg. The MSL design that we have adopted uses the lander propulsion system for cruise attitude and trajectory correction maneuvers. Propellant mass is included in the mass estimate for the entry system.

TABLE 2. Lander Payload Mass Summary.

Element	Mass (kg)	Element	Mass (kg)
Reactor Power System	458	Power electronics	34.8
Structure	35	Radiator	72
Telecom	32.7	Shielding (incl. Electronics platform)	578
Thermal	2	Mast-mounted science payload	2
Avionics box	17.3	Cryobot & Tether	80
Primary battery (for EDL and deployment)	37	Astrobiology science package	2.5
Secondary battery	53.4	**Total Payload Mass**	**1404.7**

The wet launch mass of 3947 kg leaves a mass margin of 1213 kg over the Delta 4050H worst-case capability. This gives a spacecraft mass margin of better than 30% for this mission.

The Cryobot Lander was designed to fit within the envelope of an MSL-derived 4.57 m-diameter with an extended backshell to accommodate the height of the power system (Figure 4). This is the largest aeroshell that can be launched by currently available launch vehicles and it gives fairly good performance in terms of landed mass capability. Using the current Mach 2.2 qualification envelope of the Viking-style supersonic parachute this aeroshell is estimated to allow a landed mass of about 2048 kg to be delivered to the surface. The cryobot lander estimated landed mass exceeds this by some 350 kg, which will probably require an expansion of the qualification envelope of the supersonic 'chute. It is estimated that the same Viking-style parachute, if qualified to a Mach 3 envelope could increase landed mass capability for the same aeroshell to as much as 3600 kg. The availability of this Mach 3 parachute has been assumed for this mission study. It should be noted that the use of a Mach 3 'chute requires no new technology development, but is rather a question of increase in the qualification envelope of an existing, proven design.

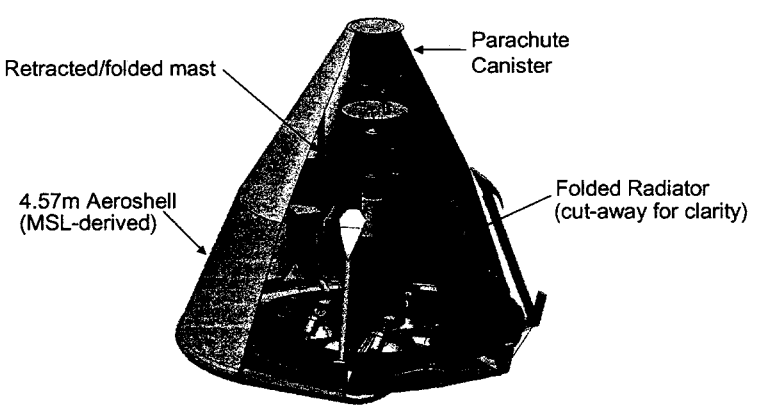

FIGURE 4. Lander in Aeroshell

Subsystems Design

The design of subsystems for the cryobot lander maximizes the adoption of proven elements from heritage missions, or those presently in development. No new technology development is required to implement any of the lander subsystems incorporated in the design.

Telecommunications

The lander can receive commands and return telemetry either directly to Earth (DTE) at X-band (low rate using a patch antenna) or at high rate through a Mars communications satellite (nominally the Agenzia Spaziale Italiana (ASI) Marconi telecom orbiter) at UHF via a steerable high gain antenna. At this latitude there will be long periods of time during which the lander will have no view of the Earth, which led to the choice of relay communications rather than high power DTE. Figure 5 depicts the available links.

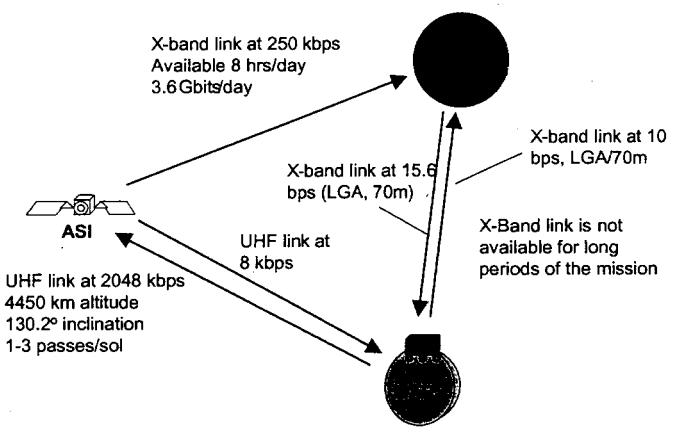

FIGURE 5. Telecommunications Links

All telemetry return will nominally be done at UHF through the ASI Marconi satellite. This includes the science and engineering data. Data will be relayed whenever the ASI orbiter comes into view. The pass shall have a minimum elevation angle of 30°. At this elevation angle, a data rate of 2048 kbps can be supported. The nominal data volume per sol is 4.3 Gb of science data and 5 Mb of engineering data.

Avionics

The lander electronics design is adapted from that developed for the Mars Exploration Rover (MER) and Mars Reconnaissance Orbiter (MRO) spacecraft. Lander electronics will be incorporated in a warm electronics box mounted on the shielded electronics platform raised 4 m above the nuclear power system. The electronics used in this design are rated to withstand a total ionizing dose of 300 krad with a radiation design margin (RDM) of 2. The electronics platform and reactor shielding design provides a maximum dose of less than 200 krad over the five-year mission.

Power

In addition to the fission power system the lander incorporates batteries for portions of the mission when the reactor is not available. A primary battery is included to provide energy for the entry, descent and landing (EDL) phase of the mission, and to power the lander during a three-day initial deployment through initial reactor startup. This energy will be supplied by an 8400 Whr Lithium Thionyl Chloride primary battery based on an existing design developed by JPL for the Air Force. A secondary battery will provide the energy to the lander in the event of a reactor anomaly during the landed mission. This battery is sized to provide energy for a two-day recovery period to

support telecom and other engineering systems (but no science), as well as one additional reactor startup cycle. The total energy storage requirement was estimated at 2085 Whr. This requirement will be met by three 25-Ahr Li-ion batteries based on the design originally developed for the Mars '01 Lander Mission.

Surface Fission Power System

The surface fission power system (Figure 5) uses a heatpipe-cooled, UN-fueled, stainless steel-clad, pin-type reactor with a Stirling power conversion system (Lipinski, 2002). Heat is rejected to the cold Martian surroundings via a set of capillary pumped loops embedded in a deployable disk-shaped thermal radiator. The system produces 3 kWe and its mass is presently estimated to be 1143 kg. A Stirling conversion system was chosen because its high efficiency reduces the amount of fuel burnup, radiation levels, and heat that the radiator must reject. A heatpipe-cooled reactor was chosen because it provides parallel heat-removal paths for the reactor without an external pump and has the potential for reduction in development and testing costs due to its modularity (Poston, 2001). Heatpipes also have been proven to be able to handle multiple freeze-thaw cycles.

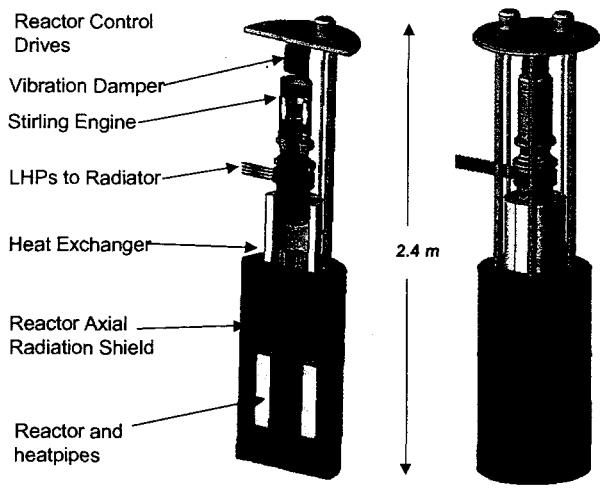

FIGURE 5. Surface Fission Power System

Shield Design

By far the dominant factor influencing the design of this mission is the shielding necessary to provide a safe haven for the lander and instrument electronics. A baseline requirement was that total mission dose to electronics should be kept below 200 krad to allow the use of currently available technology. The need to minimize shielding mass has led to a unique solution to this problem. It became clear that shielding the full area of the lander deck to acceptable levels would be a prohibitively massive proposition, and scattering from the Martian surface precluded the adoption of a simple shadow shield, such as might be effectively applied in a space environment. The solution takes the form of a combination shield consisting of two major parts: a preferential 4π shield around the reactor and a shadow shield under an elevated electronics platform as can be seen in Figure 3. The platform is placed atop a 4-m boom that extends from the top of the power conversion system. A 4-m length was chosen as a balance between shielding and structural/deployment concerns; this height allows approximately 100 kg of shielding to be placed at the base of the platform. The 4π shield contains most of the mass and does most of the shielding, largely by preventing neutrons from scattering off of the surface and spacecraft components. A certain minimum amount of 4π shielding, ~200 kg, is required to keep doses acceptable to power system components (control drives, Stirling engine parts, etc.). In the lander design the 4π shield is considerably augmented, weighing 465 kg. This allows the platform shield mass to be kept within the requirement of ~100 kg, and the extra 4π shielding keeps doses lower to the cryobot, feed cables, and other lander components. The platform shield consists of additional neutron shielding (20 cm of additional LiH) and a 0.5 cm thick depleted uranium gamma shield. This gives the platform shield a total mass of 113 kg. The total mission dose at the electronics platform resulting from this shielding design is shown in Table 3 for gamma and neutron dose.

TABLE 3. Radiation Dose Results (5 years at 15 kWt).

Location	Neutron (krad)	Gamma (krad)	Total (krad)*
Platform Average	139	205	180
Platform Center	129	142	157
Platform Edge	160	188	197
Stirling Alternator	12,050	544	12,594

*note that total for platform locations includes assumed 5x reduction in gamma dose provided by electronics boxes

The shielding results in radiation dose levels that meet the requirements and should ensure the life of electronic components exceed the duration of the mission.

CONCLUSIONS

This design study for the Mars Nuclear Cryobot Lander has produced a viable and scientifically exciting design for a Mars surface mission enabled by nuclear power. The cryobot science mission is particularly well suited to the early use of fission power in a Mars surface environment. The mission uses existing technology for science and is able to provide a level of power and a mission duration that will enable a full characterization of the north polar ice cap in the region around the landing site. The cryobot mission offers an ideal packaging of science instrumentation for a nuclear powered mission. Following initial deployment the cryobot and its sensitive electronics are effectively shielded from the reactor as it descends into the ice. Finally, the landing site itself aids in the shielding design, since the water ice upon which the lander will rest will help to mitigate the scattered neutron dose to the lander.

The lander design developed here can also be applied to a host of other surface missions with little modification. The study team considered a number of different options for science-driven missions including deep drilling for geological exploration, high-powered laser induced breakdown spectroscopy to investigate regional mineralogy, and in-situ resource utilization. The concepts explored here can also be applied to higher-powered surface missions, which may become increasingly important to the development of robotic bases or precursors to human exploration.

This study has served to open the door to the possibilities enabled by fission-power applied to surface missions. The results have shown that such missions are feasible today, with the technologies already available or in late stages of development. Further work should be aimed at optimizing designs and expanding the envelope of potential applications that will revolutionize the potential for science return from Mars and beyond.

ACKNOWLEDGMENTS

The authors wish to acknowledge the efforts of the design team responsible for the detailed development of this mission concept. The interagency collaboration included members of the New Product Development Team (NPDT) at JPL: Knut I. Oxnevad (Team Lead), Craig Peterson, David Hansen, Sal Distefano, Eric Wood, Vince Randolph, Brian Wilcox, Arthur Na-nakornpanom, Guillermo Olarte, Jason Andringa, Cesar Sepulveda, Tom Wilson, Hovik Nazaryan, Greg Wilson. DoE team members, in addition to the authors, included: Scientech: Abe Weitzberg; Department of Energy (HQ): Dirk Cairns-Gallimore. The research described in this publication was carried out at the Jet Propulsion Laboratory, California Institute of Technology, under a contract with the National Aeronautics and Space Administration. Additional funding was provided by the US Department of Energy.

REFERENCES

Lipinski, R. J., et al., "Small Fission Power Systems for Mars," in proceedings of *Space Technology and Applications International Forum (STAIF-2002)*, edited by M. El-Genk, AIP Conference Proceedings 608, New York, 2002.

Poston, David, "The Heatpipe-Operated Mars Exploration Reactor (HOMER)," in proceedings of *Space Technology and Applications International Forum (STAIF-2001)*, edited by M. El-Genk, AIP Conference Proceedings 552, New York, 2000, pp. 797-804.