JPL

Contamination Control Engineering

Brian Blakkolb
Contamination Control Engineering Group Leader
Jet Propulsion Laboratory

5 December 2002

Experience with contamination control for space-borne sensors

- **JPL has extensive experience fielding contamination sensitive missions--in house and with our industry/academic partners**
- **Contamination control engineering across the mission life cycle:**
  - Requirements Derivation→Hardware Design→A, I &T→LVI→Flight ops
- **Development and implementation of mission-driven cleanliness requirements for a wide range of electro-optical sensors: UV-Vis-IR**
- **GALEX, WFPC-II, AIRS, TES, *et al***
- **Personnel on staff with experience supporting contamination control for SBIRS elements:**
  - Brilliant Pebbles, Brilliant Eyes, SMTS
  - SBIRS-Low
  - DSP
  - Flight experiments (MATLAB, MSX,)

GALEX—Galaxy Evolution Explorer

- **Telescope Aperture: 50 cm**
- **Optical Design**
  - Modified Ritchey-Chretien with Aspheric corrected
  - Far UV band 0.135—0.180 μ
    Near UV 0.180—0.300 μ
- **System Cleanliness requirements**
  - Molecular: < 0.065 $\mu g/cm^2$
  - Particulate: < 1 PAC

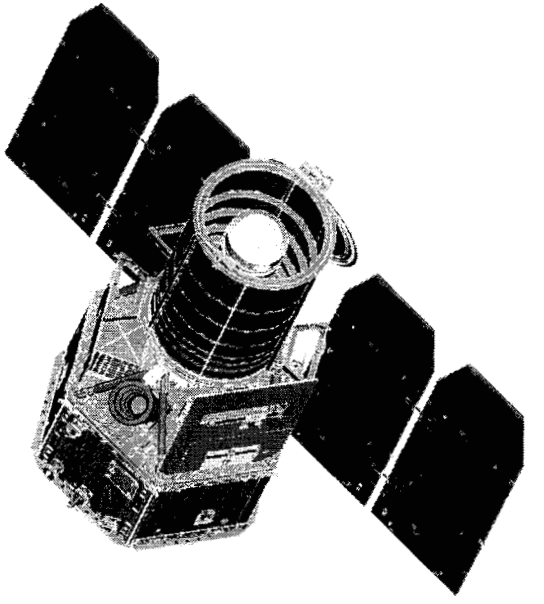

GALEX Satellite

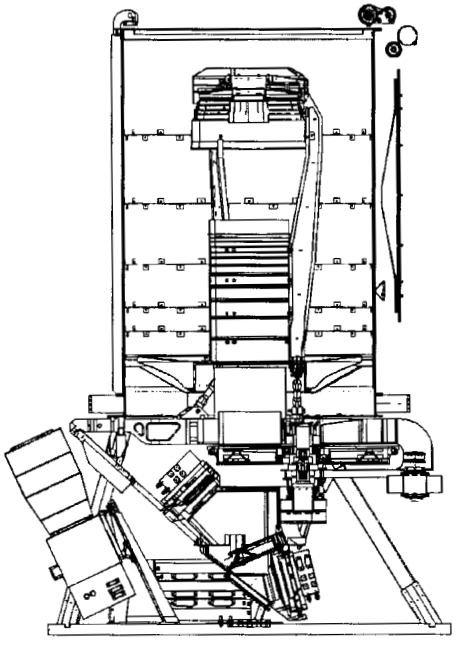

GALEX Instrument Cut-Away View

AIRS--Atmospheric Infrared Sounder

- **Spectral Range**
  - IR 3.74 -- 15.4 μm
  - Visible/NIR 0.41--0.94 μm
- **58 K focal plane**

  AIRS focal plane cryocooler, developed under contract with TRW
- **Scanning Optics**
- **Cleanliness Req**
  - Molecular: <1 $\mu g/cm^2$
  - Particulate: < 0.02 PAC

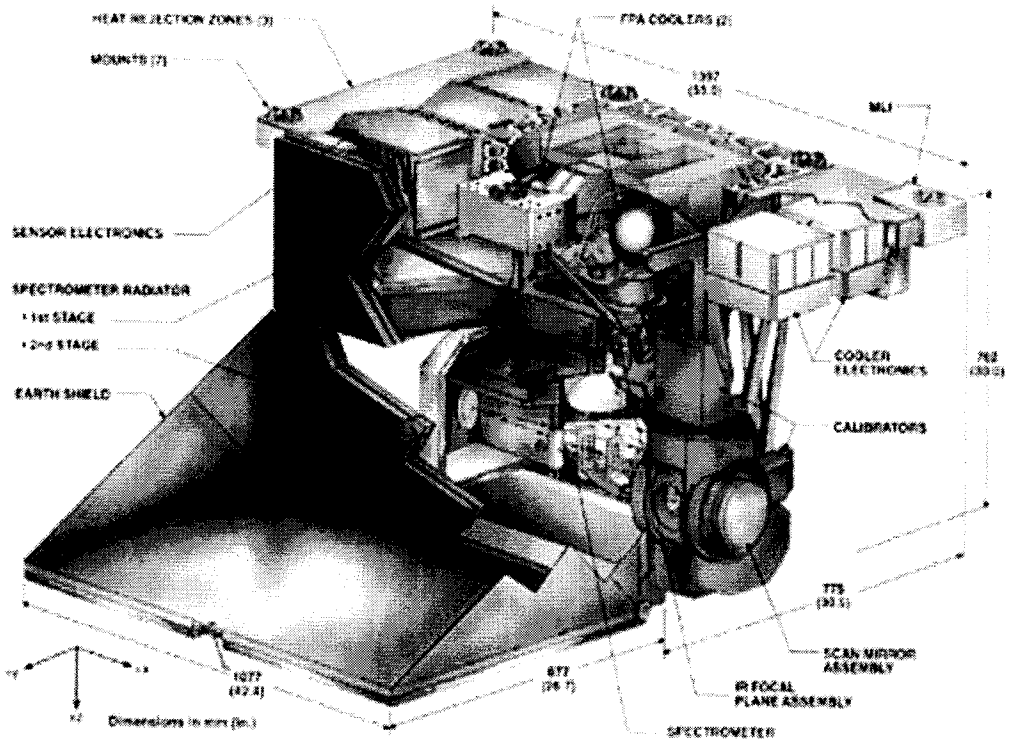

JPL

Specialized Capabilities

- **Molecular Contamination Spectral Effects (MCSE) Chamber**
  - *In situ* measurement of optical effects of contamination
- **Molecular Contamination Investigation Facility (MCIF)**
  - Multiple temperature materials outgassing measurement
- **Extensive library of materials outgassing data**
  - MCIF
  - ASTM-E595
- **Contamination Modeling**
  - EWB—Environments Work Bench
    - Developed under contract to NASA by S-Cubed division of Maxwell Labs
- **Future studies of contamination issues associated with electric propulsion**

EWB allows contamination modeling to follow rapid design changes

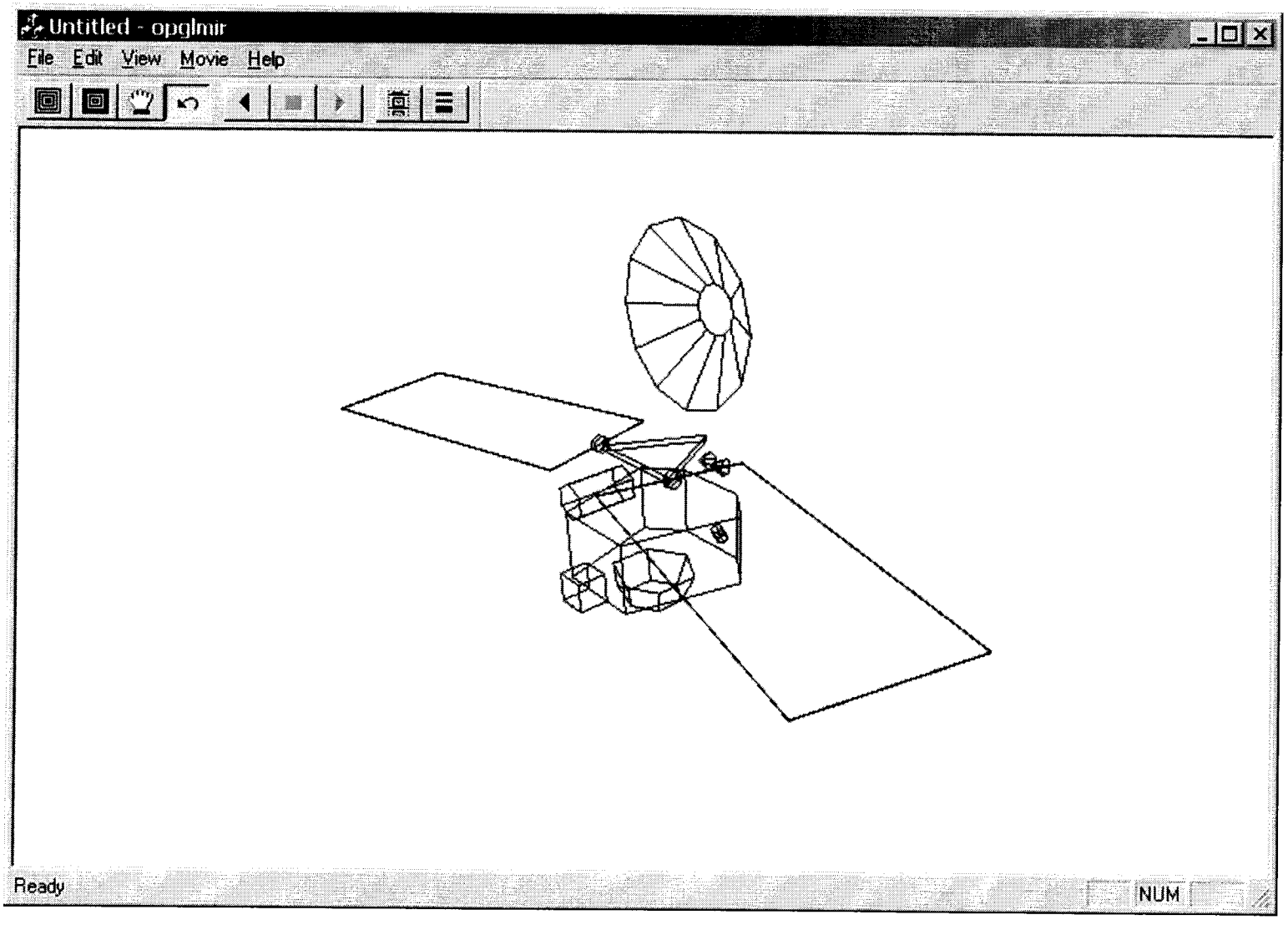

Solar Array Position Affects Plume density

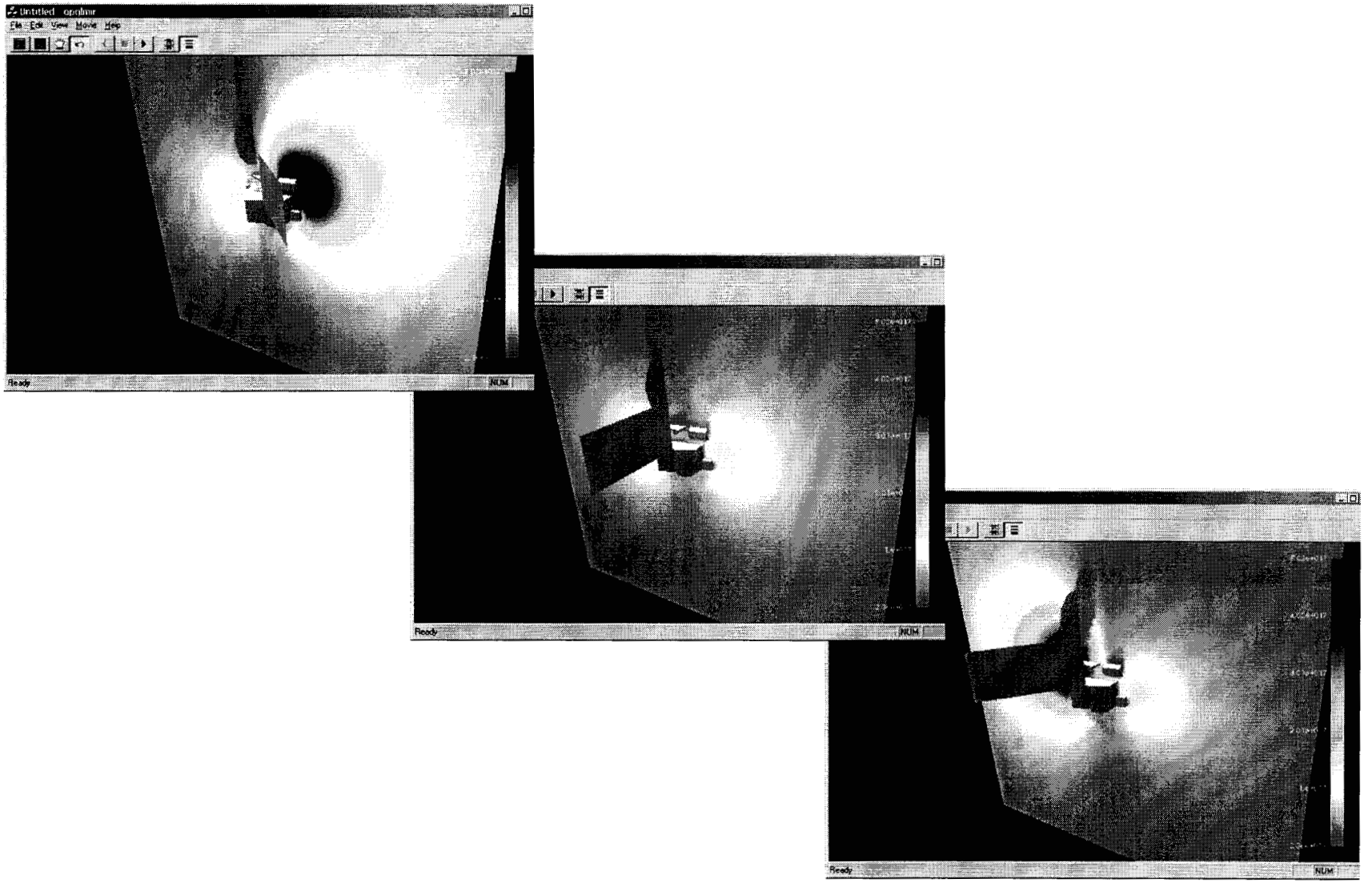

Characterization of Contaminants and Their Effects

Molecular Contamination Spectral Effects (MCSE) Chamber

- Measure and evaluate the transmissive and reflective spectral effects of lenses and mirrors from VUV to Infrared wavelength. Turbo molecular drag (oil-free)– range::1K to 5.0×10^{-7} torr Dual cryopumped vacuum – total pressure :10^{-7} to 10^{-9} torr
- **Molecular Contamination Monitoring Capabilities**
  - **Collecting surfaces:quartz crystal microbalances (QCM), One cryo-quartz crystal microbalance (QCM)– range 5K to 350K, 10 MHz Aluminum-plated crystals, Sensitivity:3.5×10^{-9} gm/cm^2/Hz**
  - **Residual Gas Analyzer (RGA)**
- **VUV-UV-Visible-NIR-IR Spectroscopy**
  - **Reflectance, Transmission**
  - **0.12 – 25 μm**
- **Temperature control**
  - **K-Cell :+20 C to +165 C**
  - **Target control range:15 K to 350 K**
- **BRDF (future capability)**
  - **Nd:Yag (1.06 nm)**
  - **CO_2 (10.6 nm)**
  - **HeNe (635 nm)**

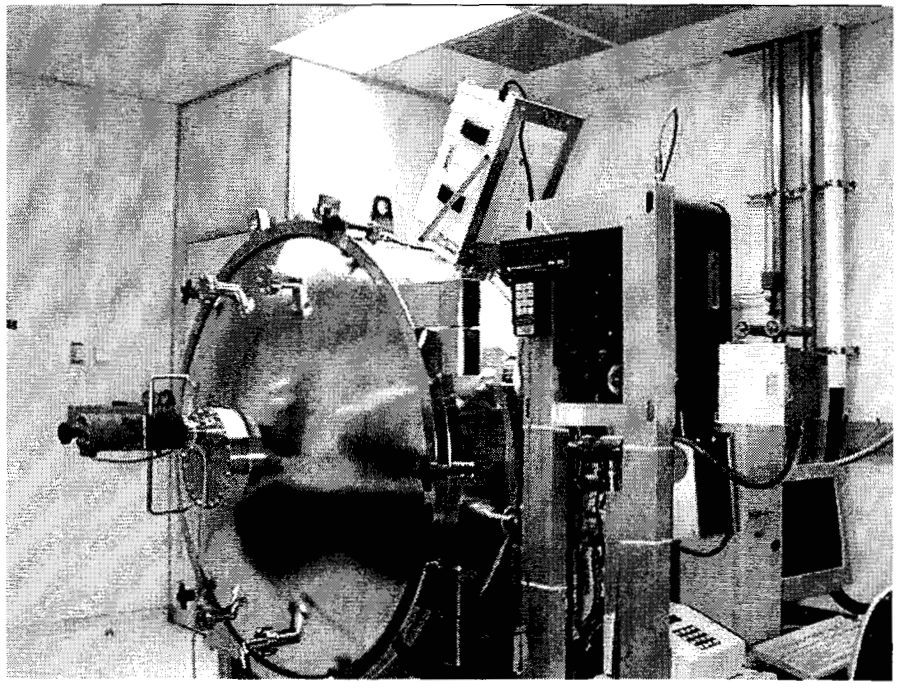

Molecular Contamination Investigation Facility

- TEST CONFIGURATION AND CONDITIONS: The test can be conducted using the provided hardware/electronic components (source contaminant), which would be placed inside the Knudsen-Cell type sample heat exchanger, inside the test chamber
- Pressure: $<10^{-5}$ Torr
- Three Quartz Crystal Microbalances
  - Independent temperature control
- Sample heat exchanger continuously variable to simulate mission operational temperature profile

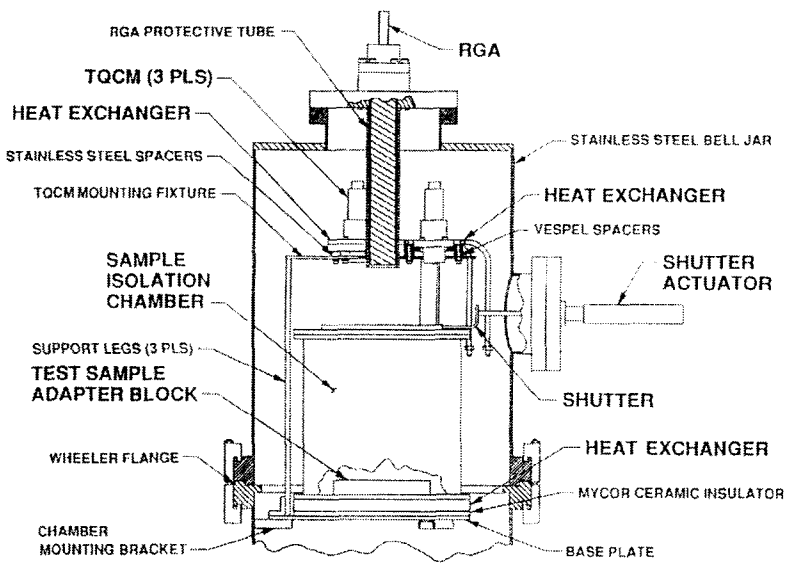

JPL

Conclusions

- JPL has familiarity with contamination issues relevant to SBIRS
- JPL has experience fielding and managing contamination sensitive missions
- Excellent working relationship with space contamination control community